Product Change Notification / SYST-08SQQZ486

Date:

10-Sep-2021

Product Category:

8-bit Microcontrollers

PCN Type:

Manufacturing Change

Notification Subject:

Data Sheet - PIC16(L)F15324/44 Full-Featured 14/16/20-Pin Microcontrollers

Affected CPNs:

SYST-08SQQZ486_Affected_CPN_09102021.pdf
SYST-08SQQZ486_Affected_CPN_09102021.csv

Notification Text:

SYST-08SQQZ486

Microchip has released a new Product Documents for the PIC16(L)F15324/44 Full-Featured 14/16/20-Pin Microcontrollers of devices. If you are using one of these devices please read the document located at PIC16(L)F15324/44 Full-Featured 14/16/20-Pin Microcontrollers.

Notification Status: Final

Description of Change:
Updated terminology used throughout the data sheet: "master" replaced by "host", and "slave" replaced by "client". Replaced ADCRC appearances with FRC
Updated Figures 30-1, 30-2, 30-3 and 30-4: CWGxISM replaced with CWG1DAT. Updated Tables 4-10, 29-2, 31-4, 36-3 and 37-6, and Figures 37-5, 37-9 and 37-11.

Impacts to Data Sheet: None

Reason for Change: To Improve Manufacturability

Change Implementation Status: Complete

Date Document Changes Effective: 10 Sept 2021

NOTE: Please be advised that this is a change to the document only the product has not been changed.

Markings to Distinguish Revised from Unrevised Devices: N/A

Attachments:

PIC16(L)F15324/44 Full-Featured 14/16/20-Pin Microcontrollers

Please contact your local Microchip sales office with questions or concerns regarding this notification.

Terms and Conditions:

If you wish to receive Microchip PCNs via email please register for our PCN email service at our PCN home page select register then fill in the required fields. You will find instructions about registering for Microchips PCN email service in the PCN FAQ section.

If you wish to change your PCN profile, including opt out, please go to the PCN home page select login and sign into your myMicrochip account. Select a profile option from the left navigation bar and make the applicable selections.

Affected Catalog Part Numbers (CPN)

PIC16F15324-E/7NVAO
PIC16F15324-E/JQ
PIC16F15324-E/JQVAO
PIC16F15324-E/P
PIC16F15324-E/SL
PIC16F15324-E/SLVAO
PIC16F15324-E/ST
PIC16F15324-E/STVAO
PIC16F15324-I/7NVAO
PIC16F15324-I/JQ
PIC16F15324-I/JQV07
PIC16F15324-I/JQVAO
PIC16F15324-I/P
PIC16F15324-I/SL
PIC16F15324-I/SLC02
PIC16F15324-I/SLVAO
PIC16F15324-I/ST
PIC16F15324T-E/7NVAO
PIC16F15324T-E/JQVAO
PIC16F15324T-E/SL
PIC16F15324T-E/SLVAO
PIC16F15324T-E/ST
PIC16F15324T-E/STVAO
PIC16F15324T-I/7NV01
PIC16F15324T-I/7NV02
PIC16F15324T-I/7NVAO
PIC16F15324T-I/JQ
PIC16F15324T-I/SL
PIC16F15324T-I/SLC02
PIC16F15324T-I/ST
PIC16F15344-E/GZ
PIC16F15344-E/ML
PIC16F15344-E/P
PIC16F15344-E/SO
PIC16F15344-E/SS
PIC16F15344-E/SSVAO
PIC16F15344-I/GZ
PIC16F15344-I/ML
PIC16F15344-I/MLC01
PIC16F15344-I/MLVAO
PIC16F15344-I/P
PIC16F15344-I/SO
PIC16F15344-I/SOVAO
PIC16F15344-I/SS
PIC16F15344-I/SSVAO
PIC16F15344T-E/SO

PIC16F15344T-E/SS
PIC16F15344T-E/SSV06
PIC16F15344T-E/SSVAO
PIC16F15344T-I/GZ
PIC16F15344T-I/ML
PIC16F15344T-I/MLC01
PIC16F15344T-I/MLVAO
PIC16F15344T-I/SO
PIC16F15344T-I/SOVAO
PIC16F15344T-I/SS
PIC16F15344T-I/SSVAO
PIC16LF15324-E/JQ
PIC16LF15324-E/P
PIC16LF15324-E/SL
PIC16LF15324-E/ST
PIC16LF15324-I/JQ
PIC16LF15324-I/P
PIC16LF15324-I/SL
PIC16LF15324-I/SLVAO
PIC16LF15324-I/ST
PIC16LF15324T-I/JQ
PIC16LF15324T-I/SL
PIC16LF15324T-I/ST
PIC16LF15324T-I/STV03
PIC16LF15324T-I/STVAO
PIC16LF15344-E/GZ
PIC16LF15344-E/ML
PIC16LF15344-E/P
PIC16LF15344-E/SO
PIC16LF15344-E/SS
PIC16LF15344-I/GZ
PIC16LF15344-I/ML
PIC16LF15344-I/MLVAO
PIC16LF15344-I/P
PIC16LF15344-I/SO
PIC16LF15344-I/SS
PIC16LF15344T-I/GZ
PIC16LF15344T-I/ML
PIC16LF15344T-I/MLV05
PIC16LF15344T-I/MLVAO
PIC16LF15344T-I/SO
PIC16LF15344T-I/SS

PIC16(L)F15324/44

Full-Featured 14/16/20-Pin Microcontrollers

Description

PIC16(L)F15324/44 microcontrollers feature analog, Core Independent Peripherals and communication peripherals, combined with eXtreme Low-Power (XLP) technology for a wide range of general purpose and low-power applications.

The devices feature multiple PWMs, multiple communication, temperature sensor, and memory features like Memory Access Partition (MAP) to support customers in data protection and bootloader applications, and Device Information Area (DIA) which stores factory calibration values to help improve temperature sensor accuracy.

Core Features

- C Compiler Optimized RISC Architecture
- Operating Speed:
  - DC – 32 MHz clock input
  - 125 ns minimum instruction cycle
- Interrupt Capability
- 16-Level Deep Hardware Stack
- Timers:
  - 8-bit Timer2 with Hardware Limit Timer (HLT)
  - 16-bit Timer0/1
- Low-Current Power-on Reset (POR)
- Configurable Power-up Timer (PWRTE)
- Brown-out Reset (BOR)
- Low-Power BOR (LPBOR) Option
- Windowed Watchdog Timer (WWDT):
  - Variable prescaler selection
  - Variable window size selection
  - All sources configurable in hardware or software
- Programmable Code Protection

Memory

- 7 KB Flash Program Memory
- 512 Bytes Data SRAM
- Direct, Indirect and Relative Addressing Modes
- Memory Access Partition (MAP):
  - Write-protect
  - Customizable Partition
- Device Information Area (DIA)
- Device Configuration Information (DCI)
- High-Endurance Flash (HEF)
  - Last 128 words of Program Memory

Operating Characteristics

- Operating Voltage Range:
  - 1.8V to 3.6V (PIC16LF15324/44)
  - 2.3V to 5.5V (PIC16F15324/44)
- Temperature Range:
  - Industrial: -40°C to 85°C
  - Extended: -40°C to 125°C

Power-Saving Functionality

- Doze Mode: Ability to Run the CPU Core Slower Than the System Clock
- Idle Mode: Ability to Halt CPU Core while Internal Peripherals Continue Operating
- Sleep Mode: Lowest Power Consumption
- Peripheral Module Disable (PMD):
  - Ability to disable hardware module to minimize active power consumption of unused peripherals

eXtreme Low-Power (XLP) Features

- Sleep Mode: 50 nA @ 1.8V, typical
- Watchdog Timer: 500 nA @ 1.8V, typical
- Operating Current:
  - 8 μA @ 32 kHz, 1.8V, typical
  - 32 μA/MHz @ 1.8V, typical

Digital Peripherals

- Four Configurable Logic Cells (CLC):
  - Integrated combinational and sequential logic
- Complementary Waveform Generator (CWG):
  - Rising and falling edge dead-band control
  - Full-bridge, half-bridge, 1-channel drive
  - Multiple signal sources
- Two Capture/Compare/PWM (CCP) Modules:
  - 16-bit resolution for Capture/Compare modes
  - 10-bit resolution for PWM mode
- Four 10-Bit PWMs
- Numerically Controlled Oscillator (NCO):
  - Generates true linear frequency control and increased frequency resolution
  - Input Clock: 0 Hz < F_{NCO} < 32 MHz
  - Resolution: $F_{NCO}/2^{20}$
- Two EUSART, RS-232, RS-485, LIN Compatible

© 2017-2021 Microchip Technology Inc.

Digital Peripherals (Cont.)

- I/O Pins:
  - Individually programmable pull-ups
  - Slew rate control
  - Interrupt-on-change with edge-select
  - Input level selection control (ST or TTL)
  - Digital open-drain enable
- Peripheral Pin Select (PPS):
  - Enables pin mapping of digital I/O

Analog Peripherals

- Analog-to-Digital Converter (ADC):
  - 10-bit with up to 43 external channels
  - Operates in Sleep
- Two Comparators:
  - FVR, DAC and external input pin available on inverting and noninverting input
  - Software selectable hysteresis
  - Outputs available internally to other modules, or externally through PPS
- 5-Bit Digital-to-Analog Converter (DAC):
  - 5-bit resolution, rail-to-rail
  - Positive Reference Selection
  - Unbuffered I/O pin output
  - Internal connections to ADCs and comparators
- Voltage Reference:
  - Fixed Voltage Reference with 1.024V, 2.048V and 4.096V output levels
- Zero-Cross Detect Module:
  - AC high voltage zero-crossing detection for simplifying TRIAC control
  - Synchronized switching control and timing

Flexible Oscillator Structure

- High-Precision Internal Oscillator:
  - Software selectable frequency range up to 32 MHz, ±1% typical
- x2/x4 PLL with Internal and External Sources
- Low-Power Internal 31 kHz Oscillator (LFINTOSC)
- External Oscillator Block with:
  - Three crystal/resonator modes up to 20 MHz
  - Three external clock modes up to 32 MHz
- Fail-Safe Clock Monitor:
  - Allows for safe shutdown if primary clock stops
- Oscillator Start-up Timer (OST):
  - Ensures stability of crystal oscillator resources

© 2017-2021 Microchip Technology Inc.

TABLE 1: PIC16(L)F153XX FAMILY TYPES

Device	Data Sheet Index	Program Flash Memory (KW)	Program Flash Memory (KB)	Storage Area Flash (B)	Data SRAM (bytes)	I/OPins	10-bit ADC	5-bit DAC	Comparator	8-bit/ (with HLT) Timer	16-bit Timer	Window Watchdog Timer	CCP/10-bit PWM	CWG	NCO	CLC	Zero-Cross Detect	Temperature Indicator	Memory Access Partition	Device Information Area	EUSART/ I^2C-SPI	Peripheral Pin Select	Peripheral Module Disable	Debug (1)
PIC16(L)F15313	(C)	2	3.5	224	256	6	5	1	1	1	2	Y	2/4	1	1	4	Y	Y	Y	Y	1/1	Y	Y	I
PIC16(L)F15323	(C)	2	3.5	224	256	12	11	1	2	1	2	Y	2/4	1	1	4	Y	Y	Y	Y	1/1	Y	Y	I
PIC16(L)F15324	(D)	4	7	224	512	12	11	1	2	1	2	Y	2/4	1	1	4	Y	Y	Y	Y	2/1	Y	Y	I
PIC16(L)F15325	(B)	8	14	224	1024	12	11	1	2	1	2	Y	2/4	1	1	4	Y	Y	Y	Y	2/1	Y	Y	I
PIC16(L)F15344	(D)	4	7	224	512	18	17	1	2	1	2	Y	2/4	1	1	4	Y	Y	Y	Y	2/1	Y	Y	I
PIC16(L)F15345	(B)	8	14	224	1024	18	17	1	2	1	2	Y	2/4	1	1	4	Y	Y	Y	Y	2/1	Y	Y	I
PIC16(L)F15354	(A)	4	7	224	512	25	24	1	2	1	2	Y	2/4	1	1	4	Y	Y	Y	Y	2/2	Y	Y	I
PIC16(L)F15355	(A)	8	14	224	1024	25	24	1	2	1	2	Y	2/4	1	1	4	Y	Y	Y	Y	2/2	Y	Y	I
PIC16(L)F15356	(E)	16	28	224	2048	25	24	1	2	1	2	Y	2/4	1	1	4	Y	Y	Y	Y	2/2	Y	Y	I
PIC16(L)F15375	(E)	8	14	224	1024	36	35	1	2	1	2	Y	2/4	1	1	4	Y	Y	Y	Y	2/2	Y	Y	I
PIC16(L)F15376	(E)	16	28	224	2048	36	35	1	2	1	2	Y	2/4	1	1	4	Y	Y	Y	Y	2/2	Y	Y	I
PIC16(L)F15385	(E)	8	14	224	1024	44	43	1	2	1	2	Y	2/4	1	1	4	Y	Y	Y	Y	2/2	Y	Y	I
PIC16(L)F15386	(E)	16	28	224	2048	44	43	1	2	1	2	Y	2/4	1	1	4	Y	Y	Y	Y	2/2	Y	Y	I

Note 1: I - Debugging integrated on chip.

Data Sheet Index:

A: DS40001853 PIC16(L)F15354/5 Data Sheet, 28-Pin

B: DS40001865 PIC16(L)F15325/45 Data Sheet, 14/20-Pin

C: DS40001897 PIC16(L)F15313/23 Data Sheet, 8/14-Pin

D: DS40001889 PIC16(L)F15324/44 Data Sheet, 14/20-Pin

E: DS40001866 PIC16(L)F15356/75/76/85/86 Data Sheet, 28/40/48-Pin

Note: For other small form-factor package availability and marking information, visit www.microchip.com/packaging or contact your local sales office.

TABLE 2: PACKAGES

Device	(S)PDIP	SOIC	SSOP	TSSOP	UQFN (4x4)	VQFN
PIC16(L)F15324	●	●		●	●	●
PIC16(L)F15344	●	●	●		●	

PIN DIAGRAMS

14-PIN PDIP, SOIC, TSSOP

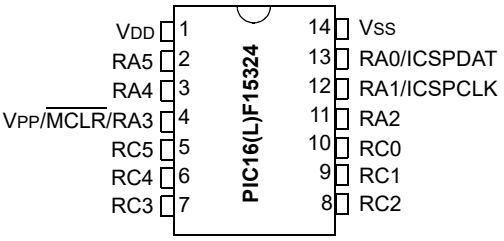

Note: See Table 3 for location of all peripheral functions.

20-PIN PDIP, SOIC, SSOP

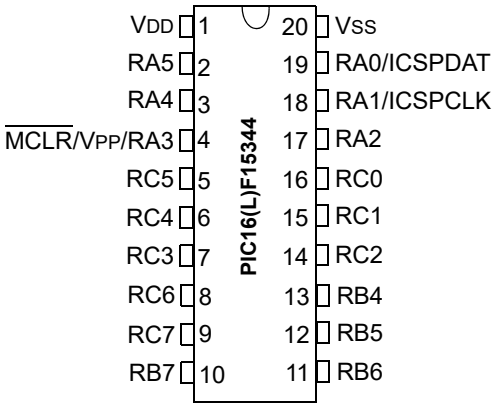

Note: See Table 4 for location of all peripheral functions.

16-PIN UQFN/VQFN (4X4)

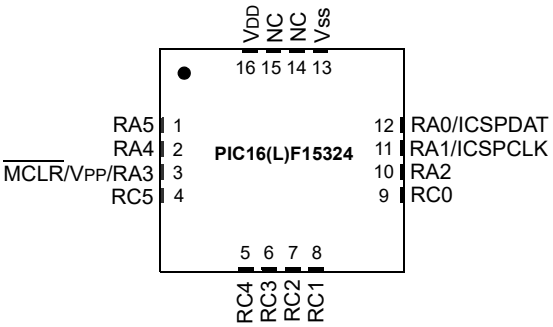

Note 1: See Table 3 for location of all peripheral functions.

2: It is recommended that the exposed bottom pad be connected to VSS.

20-PIN UQFN (4x4)

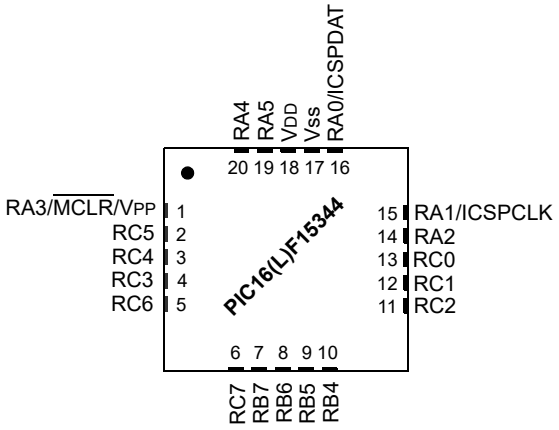

Note 1: See Table 4 for location of all peripheral functions.

2: It is recommended that the exposed bottom pad be connected to VSS.

PIN ALLOCATION TABLES

TABLE 3: 14/16-PIN ALLOCATION TABLE (PIC16(L)F15324)

I/O(2)	14-Pin PDIP/SOIC/TSSOP	16-Pin QFN/UQFN	ADC	Reference	Comparator	NCO	DAC	Timers	CCP	PWM	CWG	MSSP	ZCD	EUSART	CLC	CLKR	Interrupt	Pull-up	Basic
RA0	13	12	ANA0	—	C1IN0+	—	DAC1OUT	—	—	—	—	—	—	—	—	—	IOCA0	Y	ICSPDAT
RA1	12	11	ANA1	VREF+	C1IN0- C2IN0-	—	DAC1REF+	T0CKI(1)	—	—	—	—	—	—	—	—	IOCA1	Y	ICSPCLK
RA2	11	10	ANA2	—	—	—	—	—	—	—	CWG1IN(1)	—	ZCD1	—	—	—	INT(1) IOCA2	Y	—
RA3	4	3	—	—	—	—	—	—	—	—	—	—	—	—	—	—	IOCA3	Y	$\overline{\text{MCLR}}$ VPP
RA4	3	2	ANA4	—	—	—	—	T1G(1)	—	—	—	—	—	—	—	—	IOCA4	Y	CLKOUT OSC2
RA5	2	1	ANA5	—	—	—	—	T1CKI(1) T2IN		—	—	—	—	—	CLCIN3(1)	—	IOCA5	Y	CLKIN OSC1 EIN
RC0	10	9	ANC0	—	C2IN0+	—	—	—	—	—	—	SCK1(1) SCL1(1,4)	—	TX2(1) CK2(1)	—	—	IOCC0	Y	—
RC1	9	8	ANC1	—	C1IN1- C2IN1-	—	—	—	—	—	—	SDA1(1,4) SDI1(1)	—	RX2(1) DT2(1)	CLCIN2(1)	—	IOCC1	Y	—
RC2	8	7	ANC2	—	C1IN2- C2IN2-	—	—	—	—	—	—	—	—	—	—	—	IOCC2	Y	—
RC3	7	6	ANC3	—	C1IN3- C2IN3-	—	—	—	CCP2(1)	—	—	$\overline{\text{SS1}}$(1)	—	—	CLCIN0(1)	—	IOCC3	Y	—
RC4	6	5	ANC4	—	—	—	—	—	—	—	—	—	—	TX1(1) CK1(1)	CLCIN1(1)	—	IOCC4	Y	—
RC5	5	4	ANC5	—	—	—	—	—	CCP1(1)	—	—	—	—	RX1(1) DT1(1)	—	—	IOCC5	Y	—
VDD	1	16	—	—	—	—	—	—	—	—	—	—	—	—	—	—	—	—	VDD
VSS	14	13	—	—	—	—	—	—	—	—	—	—	—	—	—	—	—	—	VSS

Note 1: This is a PPS re-mappable input signal. The input function may be moved from the default location shown to one of several other PORTx pins.
2: All digital output signals shown in this row are PPS re-mappable. These signals may be mapped to output onto one of several PORTx pin options.
3: This is a bidirectional signal. For normal module operation, the firmware may map this signal to the same pin in both the PPS input and PPS output registers.
4: These pins are configured for I^2C logic levels. PPS assignments to the other pins will operate, but input logic levels will be standard TTL/ST as selected by the INLVL register, instead of the I^2C specific or SMBUS input buffer thresholds.

© 2017-2021 Microchip Technology Inc.

TABLE 3: 14/16-PIN ALLOCATION TABLE (PIC16(L)F15324) (CONTINUED)

I/O(2)	14-Pin PDIP/SOIC/TSSOP	16-Pin QFN/UQFN	ADC	Reference	Comparator	NCO	DAC	Timers	CCP	PWM	CWG	MSSP	ZCD	EUSART	CLC	CLKR	Interrupt	Pull-up	Basic
OUT(2)	—	—	—	—	C1OUT	NCO1OUT	—	TMR0	CCP1	PWM3OUT	CWG1A	SDO1	—	DT1(3)	CLC1OUT	CLKR	—	—	—
	—	—	—	—	C2OUT	—	—	—	CCP2	PWM4OUT	CWG1B	SCK1	—	CK1	CLC2OUT	—	—	—	—
	—	—	—	—	—	—	—	—	—	PWM5OUT	CWG1C	SCL1(3,4)	—	TX1	CLC3OUT	—	—	—	—
	—	—	—	—	—	—	—	—	—	PWM6OUT	CWG1D	SDA1(3,4)	—	DT2(3)	CLC4OUT	—	—	—	—
														CK2					
														TX2					

Note 1: This is a PPS re-mappable input signal. The input function may be moved from the default location shown to one of several other PORTx pins.
2: All digital output signals shown in this row are PPS re-mappable. These signals may be mapped to output onto one of several PORTx pin options.
3: This is a bidirectional signal. For normal module operation, the firmware may map this signal to the same pin in both the PPS input and PPS output registers.
4: These pins are configured for I^2C logic levels. PPS assignments to the other pins will operate, but input logic levels will be standard TTL/ST as selected by the INLVL register, instead of the I^2C specific or SMBUS input buffer thresholds.

© 2017-2021 Microchip Technology Inc.

TABLE 4: 20-PIN ALLOCATION TABLE (PIC16(L)F15344)

I/O(2)	20-Pin PDIP/SOIC/SSOP	20-Pin UQFN	ADC	Reference	Comparator	NCO	DAC	Timers	CCP	PWM	CWG	MSSP	ZCD	EUSART	CLC	CLKR	Interrupt	Pull-up	Basic
RA0	19	16	ANA0	—	C1IN0+	—	DAC1OUT	—	—	—	—	—	—	—	—	—	IOCA0	Y	ICSPDAT
RA1	18	15	ANA1	VREF+	C1IN0- C2IN0-	—	DAC1REF+	T0CKI(1)	—	—	—	—	—	—	—	—	IOCA1	Y	ICSPCLK
RA2	17	14	ANA2	—	—	—	—	—	—	—	CWG1IN(1)	—	ZCD1	—	CLCIN0(1)	—	INT(1) IOCA2	Y	—
RA3	4	1	—	—	—	—	—	—	—	—	—	—	—	—	—	—	IOCA3	Y	$\overline{\text{MCLR}}$ VPP
RA4	3	20	ANA4	—	—	—	—	T1G(1)	—	—	—	—	—	—	—	—	IOCA4	Y	CLKOUT OSC2
RA5	2	19	ANA5	—	—	—	—	T1CKI(1) T2IN		—	—	—	—	—	—	—	IOCA5	Y	CLKIN OSC1 EIN
RB4	13	10	ANB4 ADACT(1)	—	—	—	—	—	—	—	—	SCK1(1) SCL1(1,4)	—	—	CLCIN2(1)	—	IOCB4	—	—
RB5	12	9	ANB5	—	—	—	—	—	—	—	—	—	—	RX1(1) DT1(1)	CLCIN3(1)	—	IOCB5	—	—
RB6	11	8	ANB6	—	—	—	—	—	—	—	—	SDA1(1,4) SDI1(1)	—	—	—	—	IOCB6	Y	—
RB7	10	7	ANB7	—	—	—	—	—	—	—	—	—	—	TX1(1) CK1(1)	—	—	IOCB7	Y	—
RC0	16	13	ANC0	—	C2IN0+	—	—	—	—	—	—	SCK1(1) SCL1(1,4)	—	TX2(1) CK2(1)	—	—	IOCC0	Y	—
RC1	15	12	ANC1	—	C1IN1- C2IN1-	—	—	—	—	—	—	SDA1(1,4) SDI1(1)	—	RX2(1) DT2(1)	—	—	IOCC1	Y	—
RC2	14	11	ANC2	—	C1IN2- C2IN2-	—	—	—	—	—	—	—	—	—	—	—	IOCC2	Y	—
RC3	7	4	ANC3	—	C1IN3- C2IN3-	—	—	—	CCP2(1)	—	—	—	—	—	CLCIN1(1)	—	IOCC3	Y	—
RC4	6	3	ANC4	—	—	—	—	—	—	—	—	—	—	—	—	—	IOCC4	Y	—
RC5	5	2	ANC5	—	—	—	—	—	CCP1(1)	—	—	—	—	—	—	—	IOCC5	Y	—
RC6	8	5	ANC6	—	—	—	—	—	—	—	—	$\overline{\text{SS1}}$(1)	—	—	—	—	IOCC6	Y	—

Note 1: This is a PPS re-mappable input signal. The input function may be moved from the default location shown to one of several other PORTx pins.
2: All digital output signals shown in this row are PPS re-mappable. These signals may be mapped to output onto one of several PORTx pin options.
3: This is a bidirectional signal. For normal module operation, the firmware may map this signal to the same pin in both the PPS input and PPS output registers.
4: These pins are configured for I^2C logic levels. PPS assignments to the other pins will operate, but input logic levels will be standard TTL/ST as selected by the INLVL register, instead of the I^2C specific or SMBUS input buffer thresholds.

© 2017-2021 Microchip Technology Inc.

TABLE 4: 20-PIN ALLOCATION TABLE (PIC16(L)F15344) (CONTINUED)

I/O(2)	20-Pin PDIP/SOIC/SSOP	20-Pin UQFN	ADC	Reference	Comparator	NCO	DAC	Timers	CCP	PWM	CWG	MSSP	ZCD	EUSART	CLC	CLKR	Interrupt	Pull-up	Basic
RC7	9	6	ANC7	—	—	—	—	—	—	—	—	—	—	—	—	—	IOCC7	Y	—
VDD	1	18	—	—	—	—	—	—	—	—	—	—	—	—	—	—	—	—	VDD
VSS	20	17	—	—	—	—	—	—	—	—	—	—	—	—	—	—	—	—	VSS
OUT(2)	—	—	—	—	C1OUT	NCO1OUT	—	TMR0	CCP1	PWM3OUT	CWG1A	SDO1	—	DT1(3) DT2(3)	CLC1OUT	CLKR	—	—	—
	—	—	—	—	C2OUT	—	—	—	CCP2	PWM4OUT	CWG1B	SCK1	—	CK1 CK2	CLC2OUT	—	—	—	—
	—	—	—	—	—	—	—	—	—	PWM5OUT	CWG1C	SCL1(3,4)	—	TX1 TX2	CLC3OUT	—	—	—	—
	—	—	—	—	—	—	—	—	—	PWM6OUT	CWG1D	SDA1(3,4)	—	—	CLC4OUT	—	—	—	—

Note 1: This is a PPS re-mappable input signal. The input function may be moved from the default location shown to one of several other PORTx pins.
2: All digital output signals shown in this row are PPS re-mappable. These signals may be mapped to output onto one of several PORTx pin options.
3: This is a bidirectional signal. For normal module operation, the firmware may map this signal to the same pin in both the PPS input and PPS output registers.
4: These pins are configured for I^2C logic levels. PPS assignments to the other pins will operate, but input logic levels will be standard TTL/ST as selected by the INLVL register, instead of the I^2C specific or SMBUS input buffer thresholds.

© 2017-2021 Microchip Technology Inc.

Table of Contents

1.0 Device Overview ... 13
2.0 Guidelines for Getting Started with PIC16(L)F15324/44 Microcontrollers ... 26
3.0 Enhanced Mid-Range CPU ... 29
4.0 Memory Organization ... 31
5.0 Device Configuration ... 79
6.0 Device Information Area ... 90
7.0 Device Configuration Information ... 92
8.0 Resets ... 93
9.0 Oscillator Module (with Fail-Safe Clock Monitor) ... 104
10.0 Interrupts ... 121
11.0 Power-Saving Operation Modes ... 143
12.0 Windowed Watchdog Timer (WWDT) ... 150
13.0 Nonvolatile Memory (NVM) Control ... 158
14.0 I/O Ports ... 176
15.0 Peripheral Pin Select (PPS) Module ... 194
16.0 Peripheral Module Disable ... 204
17.0 Interrupt-On-Change ... 212
18.0 Fixed Voltage Reference (FVR) ... 221
19.0 Temperature Indicator Module ... 224
20.0 Analog-to-Digital Converter (ADC) Module ... 226
21.0 5-Bit Digital-to-Analog Converter (DAC1) Module ... 240
22.0 Numerically Controlled Oscillator (NCO) Module ... 245
23.0 Comparator Module ... 255
24.0 Zero-Cross Detection (ZCD) Module ... 265
25.0 Timer0 Module ... 271
26.0 Timer1 Module with Gate Control ... 277
27.0 Timer2 Module With Hardware Limit Timer (HLT) ... 290
28.0 Capture/Compare/PWM Modules ... 315
29.0 Pulse-Width Modulation (PWM) ... 327
30.0 Complementary Waveform Generator (CWG) Module ... 334
31.0 Configurable Logic Cell (CLC) ... 359
32.0 Host Synchronous Serial Port (MSSP1) Module ... 376
33.0 Enhanced Universal Synchronous Asynchronous Receiver Transmitter (EUSART) ... 427
34.0 Reference Clock Output Module ... 455
35.0 In-Circuit Serial Programming™ (ICSP™) ... 459
36.0 Instruction Set Summary ... 461
37.0 Electrical Specifications ... 474
38.0 DC and AC Characteristics Graphs and Charts ... 503
39.0 Development Support ... 524
40.0 Packaging Information ... 525
Appendix A: Data Sheet Revision History ... 551
The Microchip Website ... 552
Customer Change Notification Service ... 552
Customer Support ... 552
Product Identification System ... 553

TO OUR VALUED CUSTOMERS

It is our intention to provide our valued customers with the best documentation possible to ensure successful use of your Microchip products. To this end, we will continue to improve our publications to better suit your needs. Our publications will be refined and enhanced as new volumes and updates are introduced.

If you have any questions or comments regarding this publication, please contact the Marketing Communications Department via E-mail at **docerrors@microchip.com**. We welcome your feedback.

Most Current Data Sheet

To obtain the most up-to-date version of this data sheet, please register at our Worldwide Website at:

http://www.microchip.com

You can determine the version of a data sheet by examining its literature number found on the bottom outside corner of any page. The last character of the literature number is the version number, (e.g., DS30000000A is version A of document DS30000000).

Errata

An errata sheet, describing minor operational differences from the data sheet and recommended workarounds, may exist for current devices. As device/documentation issues become known to us, we will publish an errata sheet. The errata will specify the revision of silicon and revision of document to which it applies.

To determine if an errata sheet exists for a particular device, please check with one of the following:

- Microchip's Worldwide Website; **http://www.microchip.com**
- Your local Microchip sales office (see last page)

When contacting a sales office, please specify which device, revision of silicon and data sheet (include literature number) you are using.

Customer Notification System

Register on our website at **www.microchip.com** to receive the most current information on all of our products.

1.0 DEVICE OVERVIEW

The PIC16(L)F15324/44 are described within this data sheet. The PIC16(L)F15324/44 devices are available in 14/20-pin (S)PDIP, SSOP, SOIC, TSSOP and UQFN packages. Figure 1-1 and Figure 1-2 shows the block diagrams of the PIC16(L)F15324/44 devices. Table 1-2 and Table 1-3 shows the pinout descriptions.

Reference Table 1-1 for peripherals available per device.

TABLE 1-1: DEVICE PERIPHERAL SUMMARY

Peripheral		PIC16(L)F15324/44
Analog-to-Digital Converter		●
Digital-to-Analog Converter (DAC1)		●
Fixed Voltage Reference (FVR)		●
Numerically Controlled Oscillator (NCO1)		●
Temperature Indicator Module (TIM)		●
Zero-Cross Detect (ZCD1)		●
Capture/Compare/PWM Modules (CCP)		
	CCP1	●
	CCP2	●
Comparator Module (Cx)		
	C1	●
	C2	●
Configurable Logic Cell (CLC)		
	CLC1	●
	CLC2	●
	CLC3	●
	CLC4	●
Complementary Waveform Generator (CWG)		
	CWG1	●
Enhanced Universal Synchronous/Asynchronous Receiver/Transmitter (EUSART)		
	EUSART1	●
	EUSART2	●
Host Synchronous Serial Ports (MSSP)		
	MSSP1	●
Pulse-Width Modulator (PWM)		
	PWM3	●
	PWM4	●
	PWM5	●
	PWM6	●
Timers		
	Timer0	●
	Timer1	●
	Timer2	●

1.1 Register and Bit Naming Conventions

1.1.1 REGISTER NAMES

When there are multiple instances of the same peripheral in a device, the peripheral control registers will be depicted as the concatenation of a peripheral identifier, peripheral instance, and control identifier. The control registers section will show just one instance of all the register names with an 'x' in the place of the peripheral instance number. This naming convention may also be applied to peripherals when there is only one instance of that peripheral in the device to maintain compatibility with other devices in the family that contain more than one.

1.1.2 BIT NAMES

There are two variants for bit names:

- Short name: Bit function abbreviation
- Long name: Peripheral abbreviation + short name

1.1.2.1 Short Bit Names

Short bit names are an abbreviation for the bit function. For example, some peripherals are enabled with the EN bit. The bit names shown in the registers are the short name variant.

Short bit names are useful when accessing bits in C programs. The general format for accessing bits by the short name is *RegisterName*bits.*ShortName*. For example, the enable bit, EN, in the COG1CON0 register can be set in C programs with the instruction `COG1CON0bits.EN = 1`.

Short names are generally not useful in assembly programs because the same name may be used by different peripherals in different bit positions. When this occurs, during the include file generation, all instances of that short bit name are appended with an underscore plus the name of the register in which the bit resides to avoid naming contentions.

1.1.2.2 Long Bit Names

Long bit names are constructed by adding a peripheral abbreviation prefix to the short name. The prefix is unique to the peripheral thereby making every long bit name unique. The long bit name for the COG1 enable bit is the COG1 prefix, G1, appended with the enable bit short name, EN, resulting in the unique bit name G1EN.

Long bit names are useful in both C and assembly programs. For example, in C the COG1CON0 enable bit can be set with the `G1EN = 1` instruction. In assembly, this bit can be set with the `BSF COG1CON0,G1EN` instruction.

1.1.2.3 Bit Fields

Bit fields are two or more adjacent bits in the same register. Bit fields adhere only to the short bit naming convention. For example, the three Least Significant bits of the COG1CON0 register contain the mode control bits. The short name for this field is MD. There is no long bit name variant. Bit field access is only possible in C programs. The following example demonstrates a C program instruction for setting the COG1 to the Push-Pull mode:

```
COG1CON0bits.MD = 0x5;
```

Individual bits in a bit field can also be accessed with long and short bit names. Each bit is the field name appended with the number of the bit position within the field. For example, the Most Significant mode bit has the short bit name MD2 and the long bit name is G1MD2. The following two examples demonstrate assembly program sequences for setting the COG1 to Push-Pull mode:

Example 1:

```
MOVLW  ~(1<<G1MD1)
ANDWF  COG1CON0,F
MOVLW  1<<G1MD2 | 1<<G1MD0
IORWF  COG1CON0,F
```

Example 2:

```
BSF    COG1CON0,G1MD2
BCF    COG1CON0,G1MD1
BSF    COG1CON0,G1MD0
```

1.1.3 REGISTER AND BIT NAMING EXCEPTIONS

1.1.3.1 Status, Interrupt, and Mirror Bits

Status, interrupt enables, interrupt flags, and mirror bits are contained in registers that span more than one peripheral. In these cases, the bit name shown is unique so there is no prefix or short name variant.

1.1.3.2 Legacy Peripherals

There are some peripherals that do not strictly adhere to these naming conventions. Peripherals that have existed for many years and are present in almost every device are the exceptions. These exceptions were necessary to limit the adverse impact of the new conventions on legacy code. Peripherals that do adhere to the new convention will include a table in the registers section indicating the long name prefix for each peripheral instance. Peripherals that fall into the exception category will not have this table. These peripherals include, but are not limited to, the following:

- EUSART
- MSSP

FIGURE 1-1: PIC16(L)F15324 BLOCK DIAGRAM

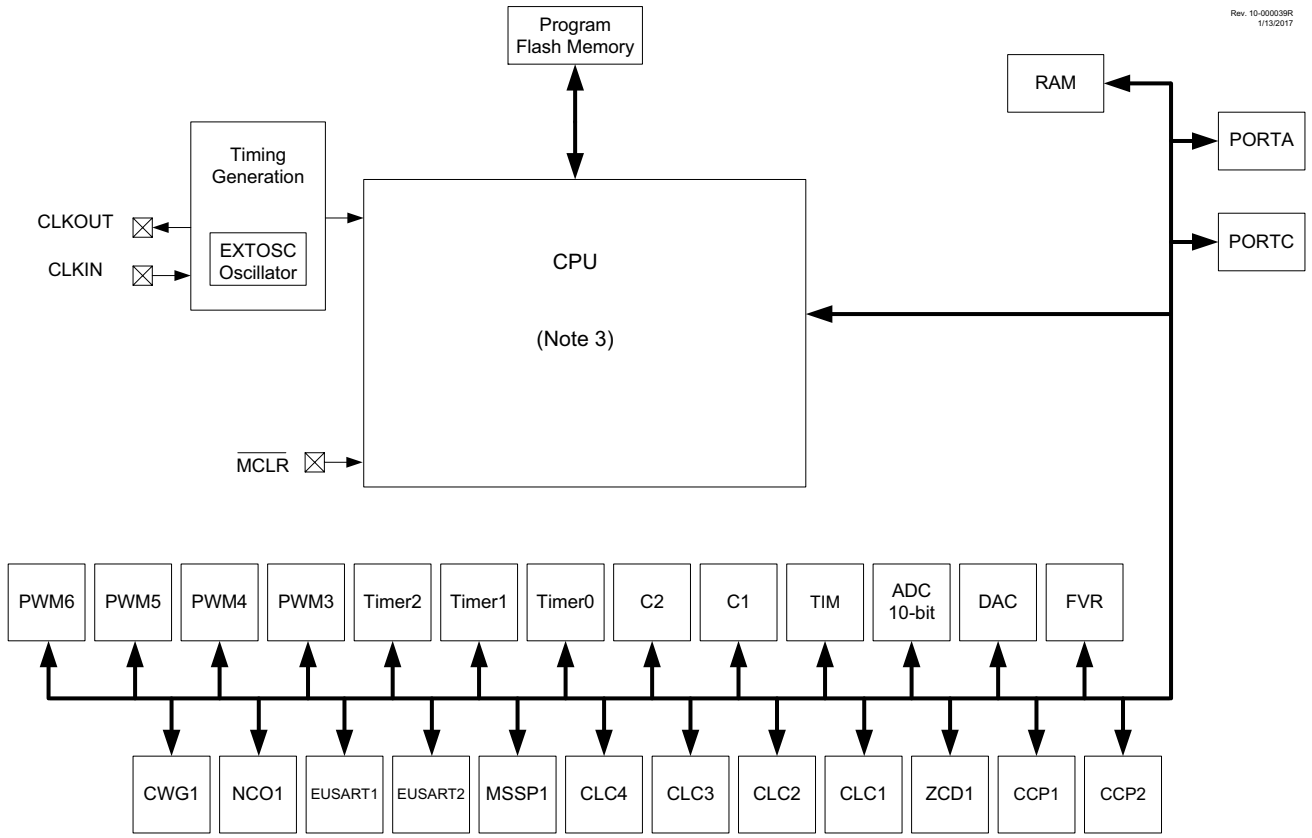

Note 1: See applicable chapters for more information on peripherals.

2: See Table 1-1 for peripherals available on specific devices.

3: See Figure 3-1.

© 2017-2021 Microchip Technology Inc.

FIGURE 1-2: PIC16(L)F15344 BLOCK DIAGRAM

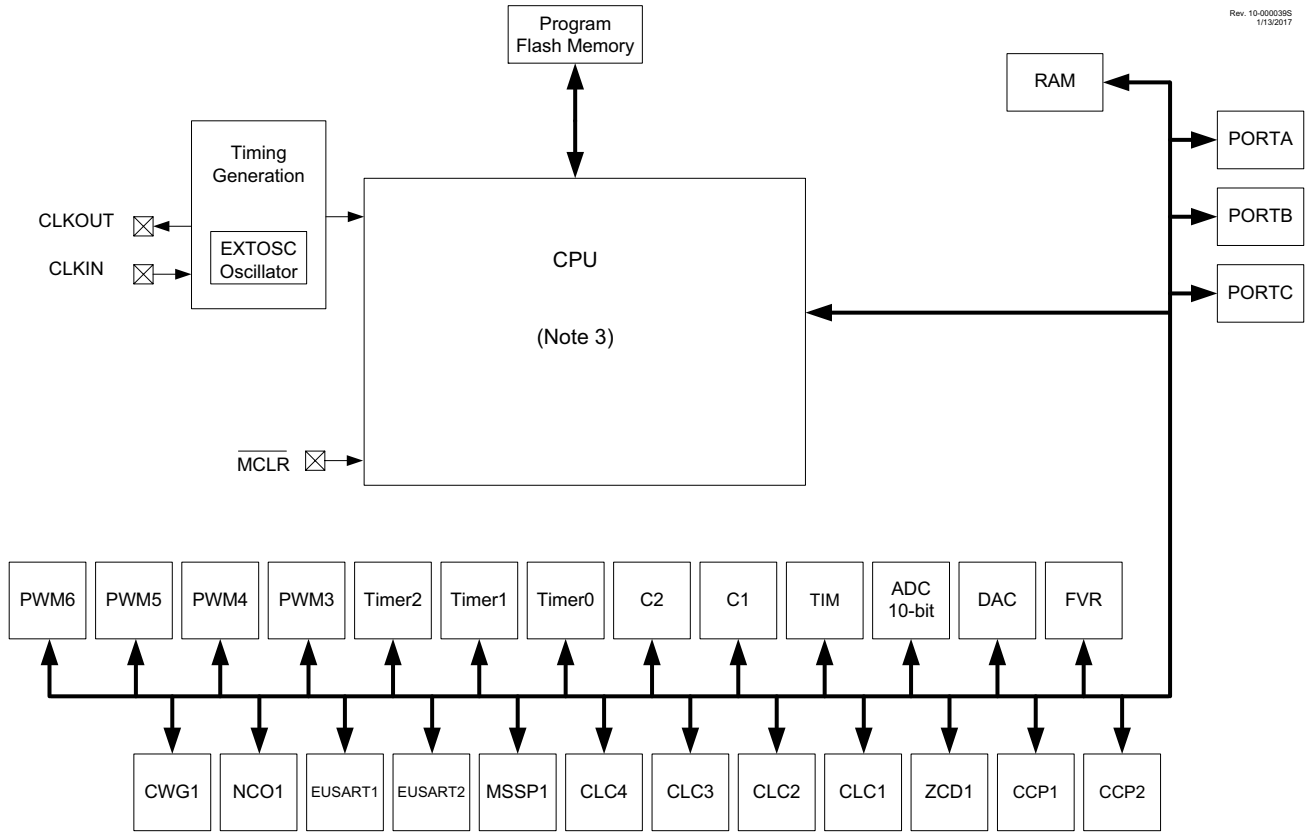

Note 1: See applicable chapters for more information on peripherals.

2: See Table 1-1 for peripherals available on specific devices.

3: See Figure 3-1.

© 2017-2021 Microchip Technology Inc.

TABLE 1-2: PIC16(L)F15324 PINOUT DESCRIPTION

Name	Function	Input Type	Output Type	Description
RA0/ANA0/C1IN0+/DAC1OUT/ ICSPDAT/IOCA0	RA0	TTL/ST	CMOS/OD	General purpose I/O.
	ANA0	AN	—	ADC Channel A0 input.
	C1IN0+	AN	—	Comparator 1 positive input.
	DAC1OUT	—	AN	Digital-to-Analog Converter output.
	ICSPDAT	ST	CMOS	In-Circuit Serial Programming™ and debugging data input/ output.
	IOCA0	TTL/ST	—	Interrupt-on-change input.
RA1/ANA1/VREF+/C1IN0-/C2IN0-/ DAC1REF+/T0CKI(1)/ICSPCLK/IOCA1	RA1	TTL/ST	CMOS/OD	General purpose I/O.
	ANA1	AN	—	ADC Channel A1 input.
	VREF+	AN	—	External ADC and/or DAC positive reference input.
	C1IN0-	AN	—	Comparator 1 negative input.
	C2IN0-	AN	—	Comparator 2 negative input.
	DAC1REF+	TTL/ST	AN	DAC positive reference.
	T0CKI(1)	TTL/ST	—	Timer0 clock input.
	ICSPCLK	ST	—	In-Circuit Serial Programming™ and debugging clock input.
	IOCA1	TTL/ST	—	Interrupt-on-change input.
RA2/ANA2/CWG1IN(1)/ZCD1/INT(1)/ IOCA2	RA2	TTL/ST	CMOS/OD	General purpose I/O.
	ANA2	AN	—	ADC Channel A2 input.
	CWG1IN(1)	TTL/ST	—	Complementary Waveform Generator 1 input.
	ZCD1	AN	AN	Zero-cross detect input pin (with constant current sink/ source).
	INT(1)	TTL/ST	—	External interrupt request input.
	IOCA2	TTL/ST	—	Interrupt-on-change input.
RA3/$\overline{\text{MCLR}}$/VPP/IOCA3	RA3	TTL/ST	CMOS/OD	General purpose I/O.
	$\overline{\text{MCLR}}$	ST	—	Master clear input with internal weak pull up resistor.
	VPP	HV	—	ICSP™ High-Voltage Programming mode entry input.
	IOCA3	TTL/ST	—	Interrupt-on-change input.
RA4/ANA4/C1IN1-/T1G(1)/CLKOUT/ OSC2/IOCA4	RA4	TTL/ST	CMOS/OD	General purpose I/O.
	ANA4	AN	—	ADC Channel A4 input.
	C1IN1-	AN	—	Comparator 1 negative input.
	T1G(1)	ST	—	Timer1 Gate input.
	CLKOUT	—	CMOS/OD	FOSC/4 digital output (in non-crystal/resonator modes).
	OSC2	—	XTAL	External Crystal/Resonator (LP, XT, HS modes) driver output.
	IOCA4	TTL/ST	—	Interrupt-on-change input.

Legend: AN = Analog input or output; CMOS = CMOS compatible input or output; OD = Open-Drain; TTL = TTL compatible input; ST = Schmitt Trigger input with CMOS levels; I^2C = Schmitt Trigger input with I^2C; HV = High Voltage; XTAL = Crystal levels

Note 1: This is a PPS remappable input signal. The input function may be moved from the default location shown to one of several other PORTx pins. Refer to Table 15-3 for details on which PORT pins may be used for this signal.

2: All output signals shown in this row are PPS remappable. These signals may be mapped to output onto one of several PORTx pin options as described in Table 15-3.

3: This is a bidirectional signal. For normal module operation, the firmware may map this signal to the same pin in both the PPS input and PPS output registers.

4: These pins are configured for I^2C logic levels. The SCLx/SDAx signals may be assigned to any of the RB1/RB2/RC3/RC4 pins. PPS assignments to the other pins (e.g., RA5) will operate, but input logic levels will be standard TTL/ST, as selected by the INLVL register, instead of the I^2C specific or SMBus input buffer thresholds.

TABLE 1-2: PIC16(L)F15324 PINOUT DESCRIPTION (CONTINUED)

Name	Function	Input Type	Output Type	Description
RA5/ANA5/T1CKI(1)/T2IN/CLCIN3(1)/CLKIN/OSC1/EIN/IOCA5	RA5	TTL/ST	CMOS/OD	General purpose I/O.
	ANA5	AN	—	ADC Channel A5 input.
	T1CKI(1)	TTL/ST	—	Timer1 external digital clock input.
	T2IN	TTL/ST	—	Timer2 external input.
	CLCIN3(1)	TTL/ST	—	Configurable Logic Cell source input.
	CLKIN	TTL/ST	—	External digital clock input.
	OSC1	XTAL	—	External Crystal/Resonator (LP, XT, HS modes) driver input.
	EIN	TTL/ST	—	External digital clock input.
	IOCA5	TTL/ST	—	Interrupt-on-change input.
RC0/ANC0/C2IN0+/SCL1(1,4)/SCK1(1)/TX2(1)/CK2(1)/IOCC0	RC0	TTL/ST	CMOS/OD	General purpose I/O.
	ANC0	AN	—	ADC Channel C0 input.
	C2IN0+	AN	—	Comparator 2 positive input.
	SCL1(1,4)	I^2C	OD	I^2C, OD, MSSP1 I^2C input/output.
	SCK1(1)	TTL/ST	CMOS/OD	MSSP1 SPI clock input/output (default input location, SCK1 is a PPS remappable input and output).
	TX2(1)	—	CMOS	EUSART2 asynchronous transmit.
	CK2(1)	TTL/ST	CMOS/OD	EUSART2 synchronous mode clock input/output.
	IOCC0	TTL/ST	—	Interrupt-on-change input.
RC1/ANC1/C1IN1-/C2IN1-/SDA1(1,4)/SDI1(1)/RX2(1)/DT2(1)/CLCIN2(1)/IOCC1	RC1	TTL/ST	CMOS/OD	General purpose I/O.
	ANC1	AN	—	ADC Channel C1 input.
	C1IN1-	AN	—	Comparator 1 negative input.
	C2IN1-	AN	—	Comparator 2 negative input.
	SDA1(1,4)	I^2C	OD	MSSP1 I^2C serial data input/output.
	SDI1(1)	TTL/ST	—	MSSP1 SPI serial data input.
	RX2(1)	TTL/ST	—	EUSART2 Asynchronous mode receiver data input.
	DT2(1)	TTL/ST	CMOS/OD	EUSART2 Synchronous mode data input/output.
	CLCIN2(1)	TTL/ST	—	Configurable Logic Cell source input.
	IOCC1	TTL/ST	—	Interrupt-on-change input.
RC2/ANC2/C1IN2-/C2IN2-/IOCC2	RC2	TTL/ST	CMOS/OD	General purpose I/O.
	ANC2	AN	—	ADC Channel C2 input.
	C1IN2-	AN	—	Comparator 1 negative input.
	C2IN2-	AN	—	Comparator 2 negative input.
	IOCC2	TTL/ST	—	Interrupt-on-change input.

Legend: AN = Analog input or output; CMOS = CMOS compatible input or output; OD = Open-Drain; TTL = TTL compatible input; ST = Schmitt Trigger input with CMOS levels; I^2C = Schmitt Trigger input with I^2C; HV = High Voltage; XTAL = Crystal levels

Note 1: This is a PPS remappable input signal. The input function may be moved from the default location shown to one of several other PORTx pins. Refer to Table 15-3 for details on which PORT pins may be used for this signal.

2: All output signals shown in this row are PPS remappable. These signals may be mapped to output onto one of several PORTx pin options as described in Table 15-3.

3: This is a bidirectional signal. For normal module operation, the firmware may map this signal to the same pin in both the PPS input and PPS output registers.

4: These pins are configured for I^2C logic levels. The SCLx/SDAx signals may be assigned to any of the RB1/RB2/RC3/RC4 pins. PPS assignments to the other pins (e.g., RA5) will operate, but input logic levels will be standard TTL/ST, as selected by the INLVL register, instead of the I^2C specific or SMBus input buffer thresholds.

TABLE 1-2: PIC16(L)F15324 PINOUT DESCRIPTION (CONTINUED)

Name	Function	Input Type	Output Type	Description
RC3/ANC3/C1IN3-/C2IN3-/CCP2(1)/ $\overline{SS1}$(1)/CLCIN0(1)/IOCC3	RC3	TTL/ST	CMOS/OD	General purpose I/O.
	ANC3	AN	—	ADC Channel C3 input.
	C1IN3-	AN	—	Comparator 1 positive input.
	C2IN3-	AN	—	Comparator 2 positive input.
	CCP2(1)	TTL/ST	CMOS/OD	Capture/compare/PWM2 (default input location for capture function).
	$\overline{SS1}$(1)	TTL/ST	—	MSSP1 SPI client select input.
	CLCIN0(1)	TTL/ST	—	Configurable Logic Cell source input.
	IOCC3	TTL/ST	—	Interrupt-on-change input.
RC4/ANC4/TX1(1)/CK1(1)/CLCIN1(1)/ IOCC4	RC4	TTL/ST	CMOS/OD	General purpose I/O.
	ANC4	AN	—	ADC Channel C4 input.
	TX1(1)	—	CMOS	EUSART1 asynchronous transmit.
	CK1(1)	TTL/ST	CMOS/OD	EUSART1 synchronous mode clock input/output.
	CLCIN1(1)	TTL/ST	—	Configurable Logic Cell source input.
	IOCC4	TTL/ST	—	Interrupt-on-change input.
RC5/ANC5/CCP1(1)/RX1(1)/DT1(1)/ IOCC5	RC5	TTL/ST	CMOS/OD	General purpose I/O.
	ANC5	AN	—	ADC Channel C5 input.
	CCP1(1)	TTL/ST	CMOS/OD	Capture/compare/PWM1 (default input location for capture function).
	RX1(1)	TTL/ST	—	EUSART1 Asynchronous mode receiver data input.
	DT1(1)	TTL/ST	CMOS/OD	EUSART1 Synchronous mode data input/output.
	IOCC5	TTL/ST	—	Interrupt-on-change input.
VDD	VDD	Power	—	Positive supply voltage input.
VSS	VSS	Power	—	Ground reference.

Legend: AN = Analog input or output; CMOS = CMOS compatible input or output; OD = Open-Drain; TTL = TTL compatible input; ST = Schmitt Trigger input with CMOS levels; I^2C = Schmitt Trigger input with I^2C; HV = High Voltage; XTAL = Crystal levels

Note 1: This is a PPS remappable input signal. The input function may be moved from the default location shown to one of several other PORTx pins. Refer to Table 15-3 for details on which PORT pins may be used for this signal.

2: All output signals shown in this row are PPS remappable. These signals may be mapped to output onto one of several PORTx pin options as described in Table 15-3.

3: This is a bidirectional signal. For normal module operation, the firmware may map this signal to the same pin in both the PPS input and PPS output registers.

4: These pins are configured for I^2C logic levels. The SCLx/SDAx signals may be assigned to any of the RB1/RB2/RC3/RC4 pins. PPS assignments to the other pins (e.g., RA5) will operate, but input logic levels will be standard TTL/ST, as selected by the INLVL register, instead of the I^2C specific or SMBus input buffer thresholds.

TABLE 1-2: PIC16(L)F15324 PINOUT DESCRIPTION (CONTINUED)

Name	Function	Input Type	Output Type	Description
OUT(2)	C1OUT	—	CMOS/OD	Comparator 1 output.
	C2OUT	—	CMOS/OD	Comparator 2 output.
	SDO1	—	CMOS/OD	MSSP1 SPI serial data output.
	SCK1	—	CMOS/OD	MSSP1 SPI serial clock output.
	DT1(3)	—	CMOS/OD	EUSART Synchronous mode data output.
	TX1	—	CMOS/OD	EUSART1 Asynchronous mode transmitter data output.
	CK1	—	CMOS/OD	EUSART1 Synchronous mode clock output.
	DT2(3)	—	CMOS/OD	EUSART Synchronous mode data output.
	TX2	—	CMOS/OD	EUSART2 Asynchronous mode transmitter data output.
	CK2	—	CMOS/OD	EUSART2 Synchronous mode clock output.
	SCL1(3,4)	—	CMOS/OD	MSSP1 I^2C output.
	SDA1(3,4)	—	CMOS/OD	MSSP1 I^2C output.
	TMR0	—	CMOS/OD	Timer0 output.
	CCP1	—	CMOS/OD	CCP1 output (compare/PWM functions).
	CCP2	—	CMOS/OD	CCP2 output (compare/PWM functions).
	PWM3OUT	—	CMOS/OD	PWM3 output.
	PWM4OUT	—	CMOS/OD	PWM4 output.
	PWM5OUT	—	CMOS/OD	PWM5 output.
	PWM6OUT	—	CMOS/OD	PWM6 output.
	CWG1A	—	CMOS/OD	Complementary Waveform Generator 1 output A.
	CWG1B	—	CMOS/OD	Complementary Waveform Generator 1 output B.
	CWG1C	—	CMOS/OD	Complementary Waveform Generator 1 output C.
	CWG1D	—	CMOS/OD	Complementary Waveform Generator 1 output D.
	CLC1OUT	—	CMOS/OD	Configurable Logic Cell 1 output.
	CLC2OUT	—	CMOS/OD	Configurable Logic Cell 2 output.
	CLC3OUT	—	CMOS/OD	Configurable Logic Cell 3 output.
	CLC4OUT	—	CMOS/OD	Configurable Logic Cell 4 output.
	NCO1OUT	—	CMOS/OD	Numerically Controller Oscillator output.
	CLKR	—	CMOS/OD	Clock Reference module output.

Legend: AN = Analog input or output; CMOS = CMOS compatible input or output; OD = Open-Drain; TTL = TTL compatible input; ST = Schmitt Trigger input with CMOS levels; I^2C = Schmitt Trigger input with I^2C; HV = High Voltage; XTAL = Crystal levels

Note 1: This is a PPS remappable input signal. The input function may be moved from the default location shown to one of several other PORTx pins. Refer to Table 15-3 for details on which PORT pins may be used for this signal.

2: All output signals shown in this row are PPS remappable. These signals may be mapped to output onto one of several PORTx pin options as described in Table 15-3.

3: This is a bidirectional signal. For normal module operation, the firmware may map this signal to the same pin in both the PPS input and PPS output registers.

4: These pins are configured for I^2C logic levels. The SCLx/SDAx signals may be assigned to any of the RB1/RB2/RC3/RC4 pins. PPS assignments to the other pins (e.g., RA5) will operate, but input logic levels will be standard TTL/ST, as selected by the INLVL register, instead of the I^2C specific or SMBus input buffer thresholds.

TABLE 1-3: PIC16(L)F15344 PINOUT DESCRIPTION

Name	Function	Input Type	Output Type	Description
RA0/ANA0/C1IN0+/DAC1OUT/ ICSPDAT/IOCA0	RA0	TTL/ST	CMOS/OD	General purpose I/O.
	ANA0	AN	—	ADC Channel A0 input.
	C1IN0+	AN	—	Comparator 1 positive input.
	DAC1OUT	—	AN	Digital-to-Analog Converter output.
	ICSPDAT	ST	CMOS	In-Circuit Serial Programming™ and debugging data input/ output.
	IOCA0	TTL/ST	—	Interrupt-on-change input.
RA1/ANA1/VREF+/C1IN0-/C2IN0-/ DAC1REF+/T0CKI(1)/ICSPCLK/IOCA1	RA1	TTL/ST	CMOS/OD	General purpose I/O.
	ANA1	AN	—	ADC Channel A1 input.
	VREF+	AN	—	External ADC and/or DAC positive reference input.
	C1IN0-	AN	—	Comparator 1 negative input.
	C2IN0-	AN	—	Comparator 2 negative input.
	DAC1REF+	TTL/ST	AN	DAC positive reference.
	T0CKI(1)	TTL/ST	—	Timer0 clock input.
	ICSPCLK	ST	—	In-Circuit Serial Programming™ and debugging clock input.
	IOCA1	TTL/ST	—	Interrupt-on-change input.
RA2/ANA2/CWG1IN(1)/ZCD1/ CLCIN0(1)/INT(1)/IOCA2	RA2	TTL/ST	CMOS/OD	General purpose I/O.
	ANA2	AN	—	ADC Channel A2 input.
	CWG1IN(1)	TTL/ST	—	Complementary Waveform Generator 1 input.
	ZCD1	AN	AN	Zero-cross detect input pin (with constant current sink/ source).
	CLCIN0(1)	TTL/ST	—	Configurable Logic Cell source input.
	INT(1)	TTL/ST	—	External interrupt request input.
	IOCA2	TTL/ST	—	Interrupt-on-change input.
RA3/$\overline{\text{MCLR}}$/VPP/IOCA3	RA3	TTL/ST	CMOS/OD	General purpose I/O.
	$\overline{\text{MCLR}}$	ST	—	Master clear input with internal weak pull up resistor.
	VPP	HV	—	ICSP™ High-Voltage Programming mode entry input.
	IOCA3	TTL/ST	—	Interrupt-on-change input.
RA4/ANA4/C1IN1-/T1G(1)/CLKOUT/ OSC2/IOCA4	RA4	TTL/ST	CMOS/OD	General purpose I/O.
	ANA4	AN	—	ADC Channel A4 input.
	C1IN1-	AN	—	Comparator 1 negative input.
	T1G(1)	ST	—	Timer1 Gate input.
	CLKOUT	—	CMOS/OD	FOSC/4 digital output (in non-crystal/resonator modes).
	OSC2	—	XTAL	External Crystal/Resonator (LP, XT, HS modes) driver output.
	IOCA4	TTL/ST	—	Interrupt-on-change input.

Legend: AN = Analog input or output; CMOS = CMOS compatible input or output; OD = Open-Drain; TTL = TTL compatible input; ST = Schmitt Trigger input with CMOS levels; I^2C = Schmitt Trigger input with I^2C; HV = High Voltage; XTAL = Crystal levels

Note 1: This is a PPS remappable input signal. The input function may be moved from the default location shown to one of several other PORTx pins. Refer to Table 15-3 for details on which PORT pins may be used for this signal.

2: All output signals shown in this row are PPS remappable. These signals may be mapped to output onto one of several PORTx pin options as described in Table 15-3.

3: This is a bidirectional signal. For normal module operation, the firmware may map this signal to the same pin in both the PPS input and PPS output registers.

4: These pins are configured for I^2C logic levels. The SCLx/SDAx signals may be assigned to any of the RB1/RB2/RC3/RC4 pins. PPS assignments to the other pins (e.g., RA5) will operate, but input logic levels will be standard TTL/ST, as selected by the INLVL register, instead of the I^2C specific or SMBus input buffer thresholds.

5: For 14/16-pin package only.

6: For 20-pin package only

TABLE 1-3: PIC16(L)F15344 PINOUT DESCRIPTION (CONTINUED)

Name	Function	Input Type	Output Type	Description
RA5/ANA5/T1CKI(1)/T2IN/CLKIN/OSC1/EIN/IOCA5	RA5	TTL/ST	CMOS/OD	General purpose I/O.
	ANA5	AN	—	ADC Channel A5 input.
	T1CKI(1)	TTL/ST	—	Timer1 external digital clock input.
	T2IN	TTL/ST	—	Timer2 external input.
	CLKIN	TTL/ST	—	External digital clock input.
	OSC1	XTAL	—	External Crystal/Resonator (LP, XT, HS modes) driver input.
	EIN	TTL/ST	—	External digital clock input.
	IOCA5	TTL/ST	—	Interrupt-on-change input.
RB4/ANB4/ADACT(1)/SCK1(1)/SCL1(1,4)/CLCIN2(1)/IOCB4	RB4	TTL/ST	CMOS/OD	General purpose I/O.
	ANB4	AN	—	ADC Channel B4 input.
	ADACT(1)	TTL/ST	—	ADC Auto-Conversion Trigger input.
	SCK1(1)	TTL/ST	CMOS/OD	MSSP1 SPI clock input/output (default input location, SCK1 is a PPS remappable input and output).
	SCL1(1,4)	I^2C	OD	MSSP1 I^2C input/output.
	CLCIN2(1)	TTL/ST	—	Configurable Logic Cell source input.
	IOCB4	TTL/ST	—	Interrupt-on-change input.
RB5/ANB5/RX1(1)/DT1(1)/CLCIN3(1)/IOCB5	RB5	TTL/ST	CMOS/OD	General purpose I/O.
	ANB5	AN	—	ADC Channel B5 input.
	RX1(1)	TTL/ST	—	EUSART1Asynchronous mode receiver data input.
	DT1(1)	TTL/ST	CMOS/OD	EUSART1 Synchronous mode data input/output.
	CLCIN3(1)	TTL/ST	—	Configurable Logic Cell source input.
	IOCB5	TTL/ST	—	Interrupt-on-change input.
RB6/ANB6/SDA1(1,4)/SDI1(1)/IOCB6	RB6	TTL/ST	CMOS/OD	General purpose I/O.
	ANB6	AN	—	ADC Channel B6 input.
	SDA1(1,4)	I^2C	OD	MSSP1 I^2C serial data input/output.
	SDI1(1)	TTL/ST	—	MSSP1 SPI serial data input.
	IOCB6	TTL/ST	—	Interrupt-on-change input.
RB7/ANB7/TX1(1)/CK1(1)/IOCB7	RB7	TTL/ST	CMOS/OD	General purpose I/O.
	ANB7	AN	—	ADC Channel B7 input.
	TX1(1)	—	CMOS	EUSART1 asynchronous transmit.
	CK1(1)	TTL/ST	CMOS/OD	EUSART1 synchronous mode clock input/output.
	IOCB7	TTL/ST	—	Interrupt-on-change input.

Legend: AN = Analog input or output; CMOS = CMOS compatible input or output; OD = Open-Drain; TTL = TTL compatible input; ST = Schmitt Trigger input with CMOS levels; I^2C = Schmitt Trigger input with I^2C; HV = High Voltage; XTAL = Crystal levels

Note 1: This is a PPS remappable input signal. The input function may be moved from the default location shown to one of several other PORTx pins. Refer to Table 15-3 for details on which PORT pins may be used for this signal.

2: All output signals shown in this row are PPS remappable. These signals may be mapped to output onto one of several PORTx pin options as described in Table 15-3.

3: This is a bidirectional signal. For normal module operation, the firmware may map this signal to the same pin in both the PPS input and PPS output registers.

4: These pins are configured for I^2C logic levels. The SCLx/SDAx signals may be assigned to any of the RB1/RB2/RC3/RC4 pins. PPS assignments to the other pins (e.g., RA5) will operate, but input logic levels will be standard TTL/ST, as selected by the INLVL register, instead of the I^2C specific or SMBus input buffer thresholds.

5: For 14/16-pin package only.

6: For 20-pin package only

TABLE 1-3: PIC16(L)F15344 PINOUT DESCRIPTION (CONTINUED)

Name	Function	Input Type	Output Type	Description
RC0/ANC0/C2IN0+/SCK1(1)/SCL1(1,4)/TX2(1)/CK2(1)/IOCC0	RC0	TTL/ST	CMOS/OD	General purpose I/O.
	ANC0	AN	—	ADC Channel C0 input.
	C2IN0+	AN	—	Comparator 2 positive input.
	SCK1(1)	TTL/ST	CMOS/OD	MSSP1 SPI clock input/output (default input location, SCK1 is a PPS remappable input and output).
	SCL1(1,4)	I^2C	OD	MSSP1 I^2C input/output.
	TX2(1)	—	CMOS	EUSART2 asynchronous transmit.
	CK2(1)	TTL/ST	CMOS/OD	EUSART2 synchronous mode clock input/output.
	IOCC0	TTL/ST	—	Interrupt-on-change input.
RC1/ANC1/C1IN1-/C2IN1-/SDA1(1,4)/SDI1(1)/RX2(1)/DT2(1)/IOCC1	RC1	TTL/ST	CMOS/OD	General purpose I/O.
	ANC1	AN	—	ADC Channel C1 input.
	C1IN1-	AN	—	Comparator 1 negative input.
	C2IN1-	AN	—	Comparator 2 negative input.
	SDA1(1,4)	I^2C	OD	MSSP1 I^2C serial data input/output.
	SDI1(1)	TTL/ST	—	MSSP1 SPI serial data input.
	RX2(1)	TTL/ST	—	EUSART2 Asynchronous mode receiver data input.
	DT2(1)	TTL/ST	CMOS/OD	EUSART2 Synchronous mode data input/output.
	IOCC1	TTL/ST	—	Interrupt-on-change input.
RC2/ANC2/C1IN2-/C2IN2-/IOCC2	RC2	TTL/ST	CMOS/OD	General purpose I/O.
	ANC2	AN	—	ADC Channel C2 input.
	C1IN2-	AN	—	Comparator 1 negative input.
	C2IN2-	AN	—	Comparator 2 negative input.
	IOCC2	TTL/ST	—	Interrupt-on-change input.
RC3/ANC3/C1IN3-/C2IN3-/CCP2(1)/CLCIN1(1)/IOCC3	RC3	TTL/ST	CMOS/OD	General purpose I/O.
	ANC3	AN	—	ADC Channel C3 input.
	C1IN3-	AN	—	Comparator 1 negative input.
	C2IN3-	AN	—	Comparator 2 negative input.
	CCP2(1)	TTL/ST	CMOS/OD	Capture/compare/PWM2 (default input location for capture function).
	CLCIN1(1)	TTL/ST	—	Configurable Logic Cell source input.
	IOCC3	TTL/ST	—	Interrupt-on-change input.
RC4/ANC4/IOCC4	RC4	TTL/ST	CMOS/OD	General purpose I/O.
	ANC4	AN	—	ADC Channel C4 input.
	IOCC4	TTL/ST	—	Interrupt-on-change input.

Legend: AN = Analog input or output; CMOS = CMOS compatible input or output; OD = Open-Drain; TTL = TTL compatible input; ST = Schmitt Trigger input with CMOS levels; I^2C = Schmitt Trigger input with I^2C; HV = High Voltage; XTAL = Crystal levels

Note 1: This is a PPS remappable input signal. The input function may be moved from the default location shown to one of several other PORTx pins. Refer to Table 15-3 for details on which PORT pins may be used for this signal.

2: All output signals shown in this row are PPS remappable. These signals may be mapped to output onto one of several PORTx pin options as described in Table 15-3.

3: This is a bidirectional signal. For normal module operation, the firmware may map this signal to the same pin in both the PPS input and PPS output registers.

4: These pins are configured for I^2C logic levels. The SCLx/SDAx signals may be assigned to any of the RB1/RB2/RC3/RC4 pins. PPS assignments to the other pins (e.g., RA5) will operate, but input logic levels will be standard TTL/ST, as selected by the INLVL register, instead of the I^2C specific or SMBus input buffer thresholds.

5: For 14/16-pin package only.

6: For 20-pin package only

TABLE 1-3: PIC16(L)F15344 PINOUT DESCRIPTION (CONTINUED)

Name	Function	Input Type	Output Type	Description
RC5/ANC5/CCP1(1)/IOCC5	RC5	TTL/ST	CMOS/OD	General purpose I/O.
	ANC5	AN	—	ADC Channel C5 input.
	CCP1(1)	TTL/ST	CMOS/OD	Capture/compare/PWM1 (default input location for capture function).
	IOCC5	TTL/ST	—	Interrupt-on-change input.
RC6/ANC6/$\overline{SS1}$(1)/IOCC6	RC6	TTL/ST	CMOS/OD	General purpose I/O.
	ANC6	AN	—	ADC Channel C6 input.
	$\overline{SS1}$(1)	TTL/ST	—	MSSP1 SPI client select input.
	IOCC6	TTL/ST	—	Interrupt-on-change input.
RC7/ANC7/IOCC7	RC7	TTL/ST	CMOS/OD	General purpose I/O.
	ANC7	AN	—	ADC Channel C7 input.
	IOCC7	TTL/ST	—	Interrupt-on-change input.
VDD	VDD	Power	—	Positive supply voltage input.
VSS	VSS	Power	—	Ground reference.

Legend: AN = Analog input or output; CMOS = CMOS compatible input or output; OD = Open-Drain; TTL = TTL compatible input; ST = Schmitt Trigger input with CMOS levels; I^2C = Schmitt Trigger input with I^2C; HV = High Voltage; XTAL = Crystal levels

Note 1: This is a PPS remappable input signal. The input function may be moved from the default location shown to one of several other PORTx pins. Refer to Table 15-3 for details on which PORT pins may be used for this signal.

2: All output signals shown in this row are PPS remappable. These signals may be mapped to output onto one of several PORTx pin options as described in Table 15-3.

3: This is a bidirectional signal. For normal module operation, the firmware may map this signal to the same pin in both the PPS input and PPS output registers.

4: These pins are configured for I^2C logic levels. The SCLx/SDAx signals may be assigned to any of the RB1/RB2/RC3/RC4 pins. PPS assignments to the other pins (e.g., RA5) will operate, but input logic levels will be standard TTL/ST, as selected by the INLVL register, instead of the I^2C specific or SMBus input buffer thresholds.

5: For 14/16-pin package only.

6: For 20-pin package only

TABLE 1-3: PIC16(L)F15344 PINOUT DESCRIPTION (CONTINUED)

Name	Function	Input Type	Output Type	Description
OUT(2)	C1OUT	—	CMOS/OD	Comparator 1 output.
	C2OUT	—	CMOS/OD	Comparator 2 output.
	SDO1	—	CMOS/OD	MSSP1 SPI serial data output.
	SCK1	—	CMOS/OD	MSSP1 SPI serial clock output.
	DT1(3)	—	CMOS/OD	EUSART Synchronous mode data output.
	TX1	—	CMOS/OD	EUSART1 Asynchronous mode transmitter data output.
	CK1	—	CMOS/OD	EUSART1 Synchronous mode clock output.
	DT2(3)	—	CMOS/OD	EUSART Synchronous mode data output.
	TX2	—	CMOS/OD	EUSART2 Asynchronous mode transmitter data output.
	CK2	—	CMOS/OD	EUSART2 Synchronous mode clock output.
	SCL1(3,4)	—	CMOS/OD	MSSP1 I^2C output.
	SDA1(3,4)	—	CMOS/OD	MSSP1 I^2C output.
	TMR0	—	CMOS/OD	Timer0 output.
	CCP1	—	CMOS/OD	CCP1 output (compare/PWM functions).
	CCP2	—	CMOS/OD	CCP2 output (compare/PWM functions).
	PWM3OUT	—	CMOS/OD	PWM3 output.
	PWM4OUT	—	CMOS/OD	PWM4 output.
	PWM5OUT	—	CMOS/OD	PWM5 output.
	PWM6OUT	—	CMOS/OD	PWM6 output.
	CWG1A	—	CMOS/OD	Complementary Waveform Generator 1 output A.
	CWG1B	—	CMOS/OD	Complementary Waveform Generator 1 output B.
	CWG1C	—	CMOS/OD	Complementary Waveform Generator 1 output C.
	CWG1D	—	CMOS/OD	Complementary Waveform Generator 1 output D.
	CLC1OUT	—	CMOS/OD	Configurable Logic Cell 1 output.
	CLC2OUT	—	CMOS/OD	Configurable Logic Cell 2 output.
	CLC3OUT	—	CMOS/OD	Configurable Logic Cell 3 output.
	CLC4OUT	—	CMOS/OD	Configurable Logic Cell 4 output.
	NCO1OUT	—	CMOS/OD	Numerically Controller Oscillator output.
	CLKR	—	CMOS/OD	Clock Reference module output.

Legend: AN = Analog input or output; CMOS = CMOS compatible input or output; OD = Open-Drain; TTL = TTL compatible input; ST = Schmitt Trigger input with CMOS levels; I^2C = Schmitt Trigger input with I^2C; HV = High Voltage; XTAL = Crystal levels

Note 1: This is a PPS remappable input signal. The input function may be moved from the default location shown to one of several other PORTx pins. Refer to Table 15-3 for details on which PORT pins may be used for this signal.

2: All output signals shown in this row are PPS remappable. These signals may be mapped to output onto one of several PORTx pin options as described in Table 15-3.

3: This is a bidirectional signal. For normal module operation, the firmware may map this signal to the same pin in both the PPS input and PPS output registers.

4: These pins are configured for I^2C logic levels. The SCLx/SDAx signals may be assigned to any of the RB1/RB2/RC3/RC4 pins. PPS assignments to the other pins (e.g., RA5) will operate, but input logic levels will be standard TTL/ST, as selected by the INLVL register, instead of the I^2C specific or SMBus input buffer thresholds.

5: For 14/16-pin package only.

6: For 20-pin package only

2.0 GUIDELINES FOR GETTING STARTED WITH PIC16(L)F15324/44 MICROCONTROLLERS

2.1 Basic Connection Requirements

Getting started with the PIC16(L)F15324/44 family of 8-bit microcontrollers requires attention to a minimal set of device pin connections before proceeding with development.

The following pins must always be connected:

- All VDD and VSS pins
  (see **Section 2.2 "Power Supply Pins"**)
- $\overline{\text{MCLR}}$ pin
  (see **Section 2.3 "Master Clear (MCLR) Pin"**)

These pins must also be connected if they are being used in the end application:

- ICSPCLK/ICSPDAT pins used for In-Circuit Serial Programming™ (ICSP™) and debugging purposes
  (see **Section 2.4 "ICSP™ Pins"**)
- OSCI and OSCO pins when an external oscillator source is used
  (see **Section 2.5 "External Oscillator Pins"**)

Additionally, the following pins may be required:

- VREF+/VREF- pins are used when external voltage reference for analog modules is implemented

The minimum mandatory connections are shown in Figure 2-1.

FIGURE 2-1: RECOMMENDED MINIMUM CONNECTIONS

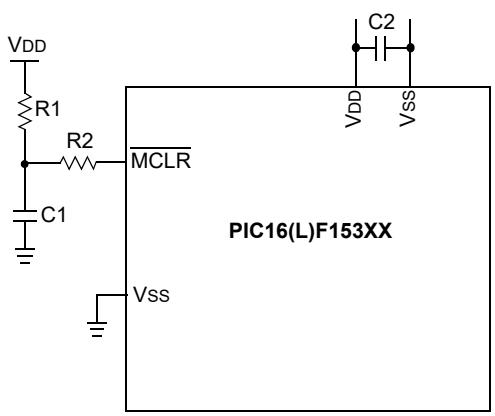

Key (all values are recommendations):

C1: 10 nF, 16V ceramic

C2: 0.1 µF, 16V ceramic

R1: 10 kΩ

R2: 100Ω to 470Ω

2.2 Power Supply Pins

2.2.1 DECOUPLING CAPACITORS

The use of decoupling capacitors on every pair of power supply pins (VDD and VSS) is required.

Consider the following criteria when using decoupling capacitors:

- **Value and type of capacitor:** A 0.1 µF (100 nF), 10-25V capacitor is recommended. The capacitor must be a low-ESR device, with a resonance frequency in the range of 200 MHz and higher. Ceramic capacitors are recommended.
- **Placement on the printed circuit board:** The decoupling capacitors need to be placed as close to the pins as possible. It is recommended to place the capacitors on the same side of the board as the device. If space is constricted, the capacitor can be placed on another layer on the PCB using a via; however, ensure that the trace length from the pin to the capacitor is no greater than 0.25 inch (6 mm).
- **Handling high-frequency noise:** If the board is experiencing high-frequency noise (upward of tens of MHz), add a second ceramic type capacitor in parallel to the above described decoupling capacitor. The value of the second capacitor can be in the range of 0.01 µF to 0.001 µF. Place this second capacitor next to each primary decoupling capacitor. In high-speed circuit designs, consider implementing a decade pair of capacitances as close to the power and ground pins as possible (e.g., 0.1 µF in parallel with 0.001 µF).
- **Maximizing performance:** On the board layout from the power supply circuit, run the power and return traces to the decoupling capacitors first, and then to the device pins. This ensures that the decoupling capacitors are first in the power chain. Equally important is to keep the trace length between the capacitor and the power pins to a minimum, thereby reducing PCB trace inductance.

2.2.2 TANK CAPACITORS

On boards with power traces running longer than six inches in length, it is suggested to use a tank capacitor for integrated circuits, including microcontrollers, to supply a local power source. The value of the tank capacitor may be determined based on the trace resistance that connects the power supply source to the device, and the maximum current drawn by the device in the application. In other words, select the tank capacitor so that it meets the acceptable voltage sag at the device. Typical values range from 4.7 µF to 47 µF.

2.3 Master Clear ($\overline{MCLR}$) Pin

The $\overline{MCLR}$ pin provides two specific device functions: Device Reset, and Device Programming and Debugging. If programming and debugging are not required in the end application, a direct connection to VDD may be all that is required. The addition of other components, to help increase the application's resistance to spurious Resets from voltage sags, may be beneficial. A typical configuration is shown in Figure 2-1. Other circuit designs may be implemented, depending on the application's requirements.

During programming and debugging, the resistance and capacitance that can be added to the pin must be considered. Device programmers and debuggers drive the $\overline{MCLR}$ pin. Consequently, specific voltage levels (VIH and VIL) and fast signal transitions must not be adversely affected. Therefore, specific values of R1 and C1 will need to be adjusted based on the application and PCB requirements. For example, it is recommended that the capacitor, C1, be isolated from the $\overline{MCLR}$ pin during programming and debugging operations by using a jumper (Figure 2-2). The jumper is replaced for normal run-time operations.

Any components associated with the $\overline{MCLR}$ pin must be placed within 0.25 inch (6 mm) of the pin.

FIGURE 2-2: EXAMPLE OF $\overline{MCLR}$ PIN CONNECTIONS

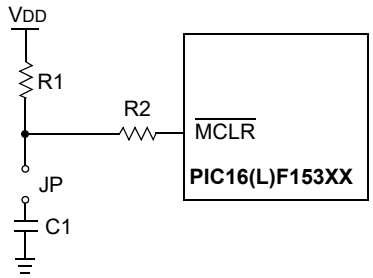

Note 1: R1 ≤ 10 kΩ is recommended. A suggested starting value is 10 kΩ. Ensure that the $\overline{MCLR}$ pin VIH and VIL specifications are met.

2: R2 ≤ 470Ω will limit any current flowing into $\overline{MCLR}$ from the external capacitor, C1, in the event of $\overline{MCLR}$ pin breakdown, due to Electrostatic Discharge (ESD) or Electrical Overstress (EOS). Ensure that the $\overline{MCLR}$ pin VIH and VIL specifications are met.

2.4 ICSP™ Pins

The ICSPCLK and ICSPDAT pins are used for In-Circuit Serial Programming™ (ICSP™) and debugging purposes. It is recommended to keep the trace length between the ICSP connector and the ICSP pins on the device as short as possible. If the ICSP connector is expected to experience an ESD event, a series resistor is recommended, with the value in the range of a few tens of ohms, not to exceed 100Ω.

Pull-up resistors, series diodes and capacitors on the ICSPCLK and ICSPDAT pins are not recommended as they will interfere with the programmer/debugger communications to the device. If such discrete components are an application requirement, they must be removed from the circuit during programming and debugging. Alternatively, refer to the AC/DC characteristics and timing requirements information in the respective device Flash programming specification for information on capacitive loading limits, and pin input voltage high (VIH) and input low (VIL) requirements.

For device emulation, ensure that the "Communication Channel Select" (i.e., ICSPCLK/ICSPDAT pins), programmed into the device, matches the physical connections for the ICSP to the Microchip debugger/emulator tool.

For more information on available Microchip development tools connection requirements, refer to **Section 39.0 "Development Support"**.

2.5 External Oscillator Pins

Many microcontrollers have options for at least two oscillators: a high-frequency primary oscillator and a low-frequency secondary oscillator (refer to **Section 9.0 "Oscillator Module (with Fail-Safe Clock Monitor)"** for details). The PIC16(L)F15324/44 devices do not have a secondary oscillator.

The oscillator circuit must be placed on the same side of the board as the device. Place the oscillator circuit close to the respective oscillator pins with no more than 0.5 inch (12 mm) between the circuit components and the pins. The load capacitors must be placed next to the oscillator itself, on the same side of the board.

Use a grounded copper pour around the oscillator circuit to isolate it from surrounding circuits. The grounded copper pour must be routed directly to the MCU ground. Do not run any signal traces or power traces inside the ground pour. Also, if using a two-sided board, avoid any traces on the other side of the board where the crystal is placed.

Layout suggestions are shown in Figure 2-3. In-line packages may be handled with a single-sided layout that completely encompasses the oscillator pins. With fine-pitch packages, it is not always possible to completely surround the pins and components. A suitable solution is to tie the broken guard sections to a mirrored ground layer. In all cases, the guard trace(s) must be returned to ground.

In planning the application's routing and I/O assignments, ensure that adjacent port pins, and other signals in close proximity to the oscillator, are benign (i.e., free of high frequencies, short rise and fall times, and other similar noise).

For additional information and design guidance on oscillator circuits, refer to these Microchip Application Notes, available at the corporate website (www.microchip.com):

- *AN826, "Crystal Oscillator Basics and Crystal Selection for rfPIC™ and PICmicro® Devices"*
- *AN849, "Basic PICmicro® Oscillator Design"*
- *AN943, "Practical PICmicro® Oscillator Analysis and Design"*
- *AN949, "Making Your Oscillator Work"*

2.6 Unused I/Os

Unused I/O pins may be configured as outputs and driven to a logic low state. Alternatively, connect a 1 kΩ to 10 kΩ resistor to VSS on unused pins and drive the output to logic low.

FIGURE 2-3: SUGGESTED PLACEMENT OF THE OSCILLATOR CIRCUIT

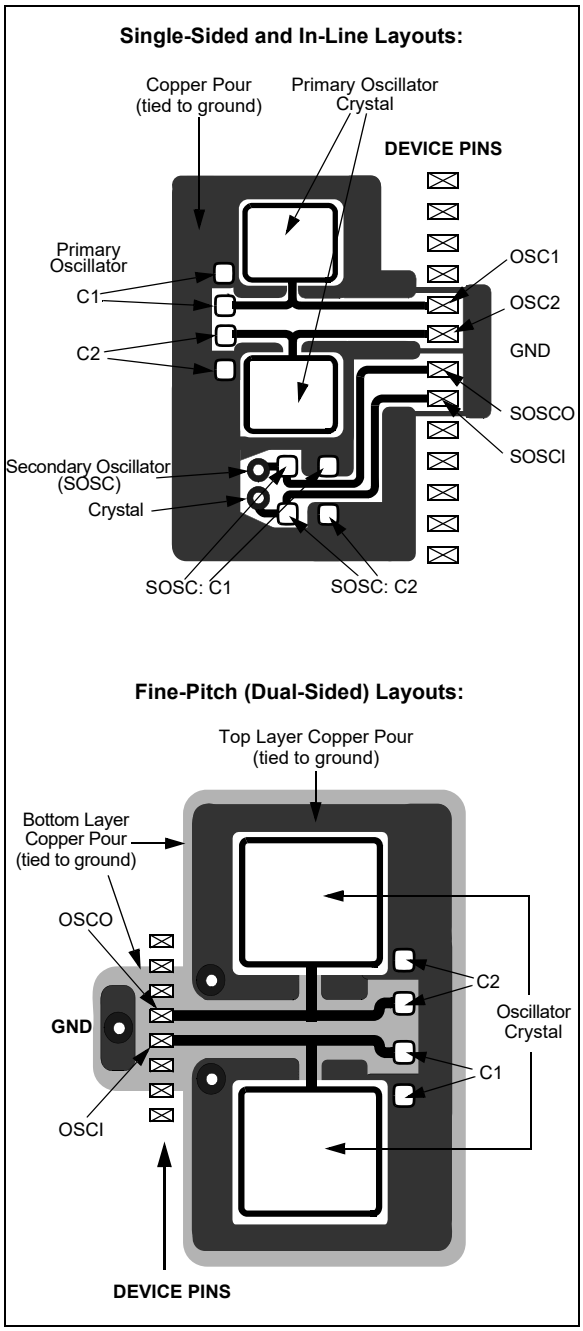

3.0 ENHANCED MID-RANGE CPU

This family of devices contains an enhanced mid-range 8-bit CPU core. The CPU has 48 instructions. Interrupt capability includes automatic context saving.

The hardware stack is 16-levels deep and has Overflow and Underflow Reset capability. Direct, Indirect, and Relative Addressing modes are available. Two File Select Registers (FSRs) provide the ability to read program and data memory.

FIGURE 3-1: CORE DATA PATH DIAGRAM

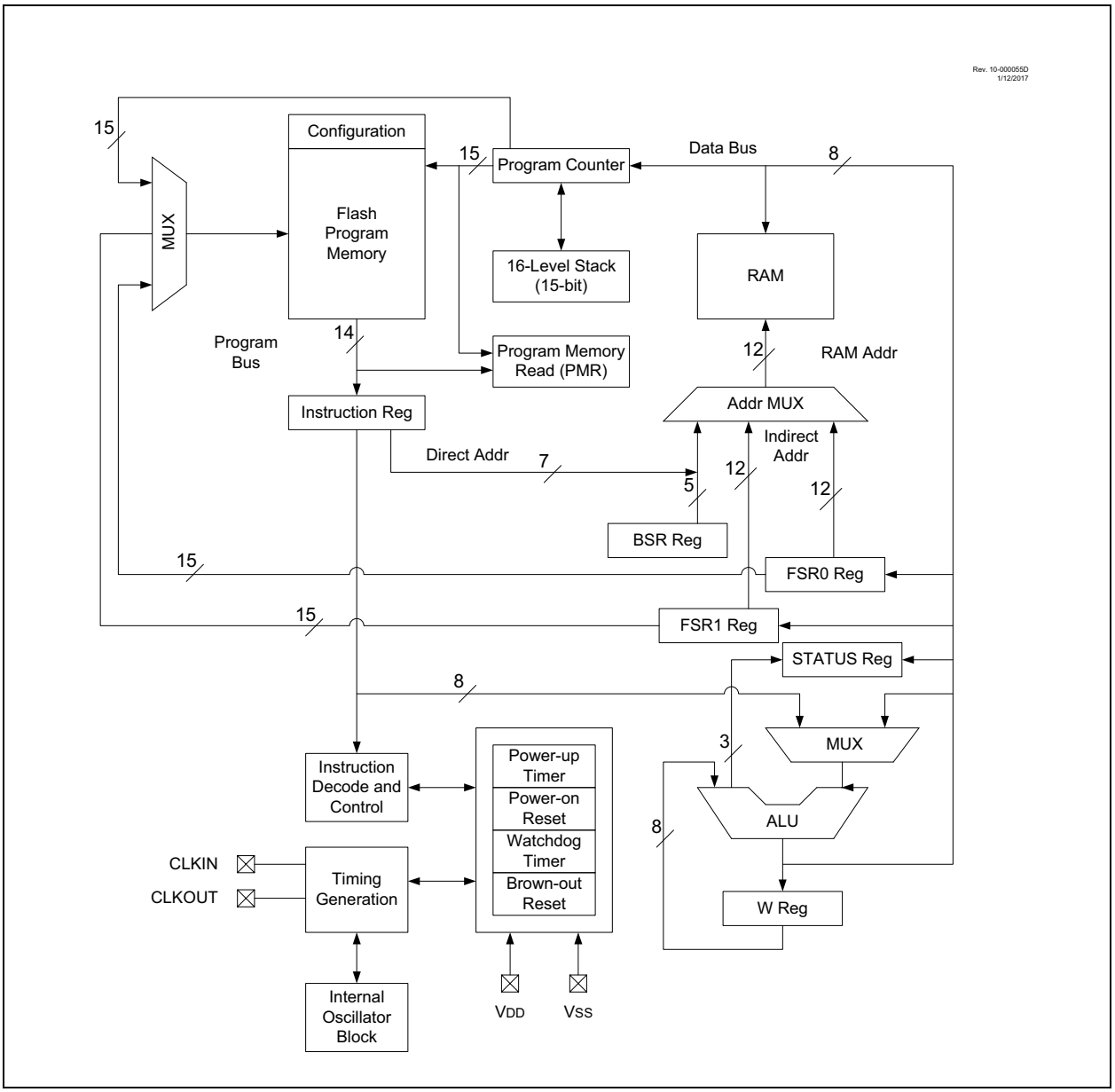

3.1 Automatic Interrupt Context Saving

During interrupts, certain registers are automatically saved in shadow registers and restored when returning from the interrupt. This saves stack space and user code. See **Section 10.5 "Automatic Context Saving"** for more information.

3.2 16-Level Stack with Overflow and Underflow

These devices have a hardware stack memory 15 bits wide and 16 words deep. A Stack Overflow or Underflow will set the appropriate bit (STKOVF or STKUNF) in the PCON0 register, and if enabled, will cause a software Reset. See **Section 4.5 "Stack"** for more details.

3.3 File Select Registers

There are two 16-bit File Select Registers (FSR). FSRs can access all file registers and program memory, which allows one Data Pointer for all memory. When an FSR points to program memory, there is one additional instruction cycle in instructions using INDF to allow the data to be fetched. General purpose memory can also be addressed linearly, providing the ability to access contiguous data larger than 80 bytes. See **Section 4.6 "Indirect Addressing"** for more details.

3.4 Instruction Set

There are 48 instructions for the enhanced mid-range CPU to support the features of the CPU. See **Section 36.0 "Instruction Set Summary"** for more details.

4.0 MEMORY ORGANIZATION

These devices contain the following types of memory:

- Program Memory
  - Configuration Words
  - Device ID
  - User ID
  - Program Flash Memory
  - Device Information Area (DIA)
  - Device Configuration Information (DCI)
  - Revision ID
- Data Memory
  - Core Registers
  - Special Function Registers
  - General Purpose RAM
  - Common RAM

The following features are associated with access and control of program memory and data memory:

- PCL and PCLATH
- Stack
- Indirect Addressing
- NVMREG access

4.1 Program Memory Organization

The enhanced mid-range core has a 15-bit program counter capable of addressing 32K x 14 program memory space. Table 4-1 shows the memory sizes implemented. The Reset vector is at 0000h and the interrupt vector is at 0004h (see Figure 4-1).

TABLE 4-1: DEVICE SIZES AND ADDRESSES

Device	Program Memory Size (Words)	Last Program Memory Address
PIC16(L)F15324/44	4096	0FFFh

FIGURE 4-1: PROGRAM MEMORY MAP AND STACK FOR PIC16(L)F15324/44

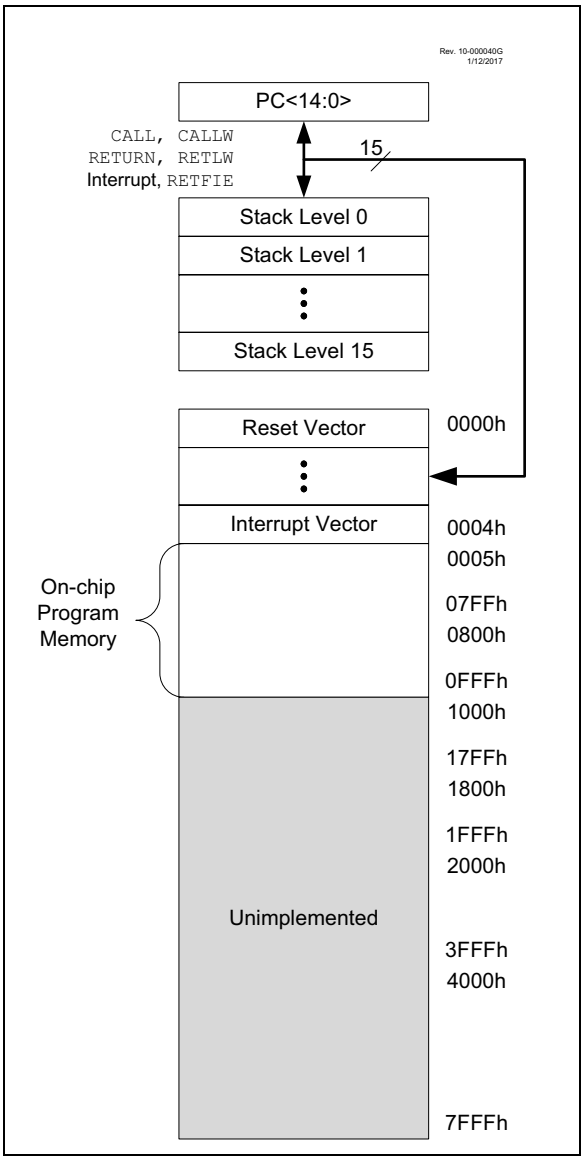

4.1.1 READING PROGRAM MEMORY AS DATA

There are three methods of accessing constants in program memory. The first method is to use tables of `RETLW` instructions. The second method is to set an FSR to point to the program memory. The third method is to use the NVMREG interface to access the program memory. For an example of NVMREG interface use, reference Section 13.3, NVMREG Access.

4.1.1.1 `RETLW` Instruction

The `RETLW` instruction can be used to provide access to tables of constants. The recommended way to create such a table is shown in Example 4-1.

EXAMPLE 4-1: `RETLW` INSTRUCTION

```
constants
    BRW                 ;Add Index in W to
                        ;program counter to
                        ;select data
    RETLW DATA0         ;Index0 data
    RETLW DATA1         ;Index1 data
    RETLW DATA2
    RETLW DATA3


my_function
    ;… LOTS OF CODE…
    MOVLW       DATA_INDEX
    call constants
    ;… THE CONSTANT IS IN W
```

The `BRW` instruction makes this type of table very simple to implement.

4.1.1.2 Indirect Read with FSR

The program memory can be accessed as data by setting bit 7 of an FSRxH register and reading the matching INDFx register. The `MOVIW` instruction will place the lower eight bits of the addressed word in the W register. Writes to the program memory cannot be performed via the INDF registers. Instructions that read the program memory via the FSR require one extra instruction cycle to complete. Example 4-2 demonstrates reading the program memory via an FSR.

The HIGH directive will set bit 7 if a label points to a location in the program memory. This applies to the assembly code Example 4-2 shown below.

EXAMPLE 4-2: ACCESSING PROGRAM MEMORY VIA FSR

```
constants
    RETLW DATA0        ;Index0 data
    RETLW DATA1        ;Index1 data
    RETLW DATA2
    RETLW DATA3
my_function
    ;… LOTS OF CODE…
    MOVLW   LOW constants
    MOVWF   FSR1L
    MOVLW   HIGH constants
    MOVWF   FSR1H
    MOVIW   0[FSR1]
;THE PROGRAM MEMORY IS IN W
```

4.2 Memory Access Partition (MAP)

User Flash is partitioned into:
- Application Block
- Boot Block, and
- Storage Area Flash (SAF) Block

The user can allocate the memory usage by setting the $\overline{\text{BBEN}}$ bit, selecting the size of the partition defined by BBSIZE[2:0] bits and enabling the Storage Area Flash by the $\overline{\text{SAFEN}}$ bit of the Configuration Word (see Register 5-4). Refer to Table 4-2 for the different user Flash memory partitions.

4.2.1 APPLICATION BLOCK

Default settings of the Configuration bits ($\overline{\text{BBEN}}$ = 1 and $\overline{\text{SAFEN}}$ = 1) assign all memory in the user Flash area to the Application Block.

4.2.2 BOOT BLOCK

If $\overline{\text{BBEN}}$ = 0, the Boot Block is enabled and a specific address range is alloted as the Boot Block based on the value of the BBSIZE bits of Configuration Word (Register 5-4) and the sizes provided in Table 5-1.

4.2.3 STORAGE AREA FLASH

Storage Area Flash (SAF) is enabled by clearing the $\overline{\text{SAFEN}}$ bit of the Configuration Word in Register 5-4. If enabled, the SAF block is placed at the end of memory and spans 128 words. If the Storage Area Flash (SAF) is enabled, the SAF area is not available for program execution. The 128 words of the SAF qualify as High-Endurance Flash (HEF) memory.

4.2.4 MEMORY WRITE PROTECTION

All the memory blocks have corresponding write protection fuses $\overline{\text{WRTAPP}}$, $\overline{\text{WRTB}}$ and $\overline{\text{WRTC}}$ bits in the Configuration Word 4 (Register 5-4). If write-protected locations are written from NVMCON registers, memory is not changed and the WRERR bit defined in Register 12-5 is set as explained in **Section 13.3.8 “WRERR Bit”**.

4.2.5 MEMORY VIOLATION

A Memory Execution Violation Reset occurs while executing an instruction that has been fetched from outside a valid execution area, clearing the $\overline{\text{MEMV}}$ bit. Refer to **Section 8.12 “Memory Execution Violation”** for the available valid program execution areas and the PCON1 register definition (Register 8-3) for $\overline{\text{MEMV}}$ bit conditions.

TABLE 4-2: MEMORY ACCESS PARTITION

REG	Address	Partition			
		$\overline{\text{BBEN}}$ = 1 SAFEN = 1	$\overline{\text{BBEN}}$ = 1 SAFEN = 0	$\overline{\text{BBEN}}$ = 0 SAFEN = 1	$\overline{\text{BBEN}}$ = 0 SAFEN = 0
PFM	00 0000h • • • Last Boot Block Memory Address	APPLICATION BLOCK(4)	APPLICATION BLOCK(4)	BOOT BLOCK(4)	BOOT BLOCK(4)
	Last Boot Block Memory Address + 1(1) • • • Last Program Memory Address - 80h			APPLICATION BLOCK(4)	APPLICATION BLOCK(4)
	Last Program Memory Address - 7Fh(2) • • • Last Program Memory Address		SAF(4)		SAF(4)
CONFIG	Config Memory Address(3)	CONFIG			

Note 1: Last Boot Block Memory Address is based on BBSIZE[2:0] given in Table 5-1.

2: Last Program Memory Address is the Flash size given in Table 4-1.

3: Config Memory Address are the address locations of the Configuration Words given in Table 13-2.

4: Each memory block has a corresponding write protection fuse defined by the $\overline{\text{WRTAPP}}$, $\overline{\text{WRTB}}$ and $\overline{\text{WRTC}}$ bits in the Configuration Word (Register 5-4).

4.3 Data Memory Organization

The data memory is partitioned into 64 memory banks with 128 bytes in each bank. Each bank consists of:

- 12 core registers
- Up to 100 Special Function Registers (SFR)
- Up to 80 bytes of General Purpose RAM (GPR)
- 16 bytes of common RAM

FIGURE 4-2: BANKED MEMORY PARTITIONING

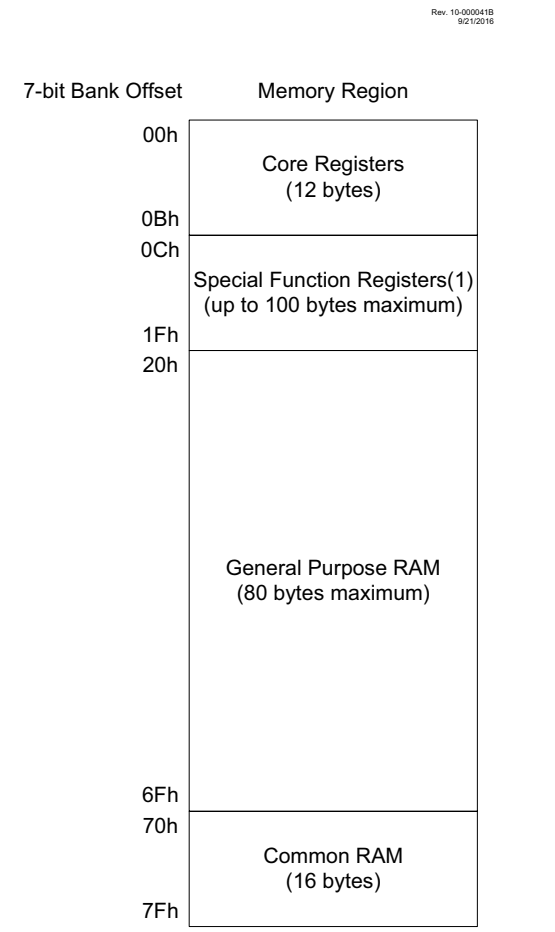

Note 1: This table shows the address for an example bank with 20 Bytes of SFRs only.

4.3.1 BANK SELECTION

The active bank is selected by writing the bank number into the Bank Select Register (BSR). All data memory can be accessed either directly (via instructions that use the file registers) or indirectly via the two File Select Registers (FSR). See **Section 4.6 "Indirect Addressing"** for more information.

Data memory uses a 13-bit address. The upper six bits of the address define the Bank address and the lower seven bits select the registers/RAM in that bank.

4.3.2 CORE REGISTERS

The core registers contain the registers that directly affect the basic operation. The core registers occupy the first 12 addresses of every data memory bank (addresses x00h/x08h through x0Bh/x8Bh). These registers are listed below in Table 4-3.

TABLE 4-3: CORE REGISTERS

Addresses	BANKx
x00h or x80h	INDF0
x01h or x81h	INDF1
x02h or x82h	PCL
x03h or x83h	STATUS
x04h or x84h	FSR0L
x05h or x85h	FSR0H
x06h or x86h	FSR1L
x07h or x87h	FSR1H
x08h or x88h	BSR
x09h or x89h	WREG
x0Ah or x8Ah	PCLATH
x0Bh or x8Bh	INTCON

4.3.2.1 STATUS Register

The STATUS register, shown in Register 4-1, contains:

- the arithmetic status of the ALU
- the Reset status

The STATUS register can be the destination for any instruction, like any other register. If the STATUS register is the destination for an instruction that affects the Z, DC or C bits, then the write to these three bits is disabled. These bits are set or cleared according to the device logic. Furthermore, the $\overline{TO}$ and $\overline{PD}$ bits are not writable. Therefore, the result of an instruction with the STATUS register as destination may be different than intended.

For example, `CLRF STATUS` will clear bits [4:3] and [1:0], and set the Z bit. This leaves the STATUS register as '`000u u1uu`' (where `u` = unchanged).

It is recommended, therefore, that only `BCF`, `BSF`, `SWAPF` and `MOVWF` instructions are used to alter the STATUS register, because these instructions do not affect any Status bits. For other instructions not affecting any Status bits, refer to **Section 36.0 "Instruction Set Summary"**.

> **Note 1:** The C and DC bits operate as $\overline{\text{Borrow}}$ and $\overline{\text{Digit Borrow}}$ out bits, respectively, in subtraction.

REGISTER 4-1: STATUS: STATUS REGISTER

U-0	U-0	U-0	R-1/q	R-1/q	R/W-0/u	R/W-0/u	R/W-0/u
—	—	—	$\overline{TO}$	$\overline{PD}$	Z	DC(1)	C(1)
bit 7							bit 0

Legend:		
R = Readable bit	W = Writable bit	U = Unimplemented bit, read as '0'
u = Bit is unchanged	x = Bit is unknown	-n/n = Value at POR and BOR/Value at all other Resets
'1' = Bit is set	'0' = Bit is cleared	q = Value depends on condition

bit 7-5 **Unimplemented:** Read as '`0`'

bit 4 **$\overline{TO}$:** Time-Out bit
`1` = After power-up, `CLRWDT` instruction or `SLEEP` instruction
`0` = A WDT time-out occurred

bit 3 **$\overline{PD}$:** Power-Down bit
`1` = After power-up or by the `CLRWDT` instruction
`0` = By execution of the `SLEEP` instruction

bit 2 **Z:** Zero bit
`1` = The result of an arithmetic or logic operation is zero
`0` = The result of an arithmetic or logic operation is not zero

bit 1 **DC:** Digit Carry/$\overline{\text{Digit Borrow}}$ bit (`ADDWF`, `ADDLW`, `SUBLW`, `SUBWF` instructions)(1)
`1` = A carry-out from the 4th low-order bit of the result occurred
`0` = No carry-out from the 4th low-order bit of the result

bit 0 **C:** Carry/$\overline{\text{Borrow}}$ bit(1) (`ADDWF`, `ADDLW`, `SUBLW`, `SUBWF` instructions)(1)
`1` = A carry-out from the Most Significant bit of the result occurred
`0` = No carry-out from the Most Significant bit of the result occurred

Note 1: For $\overline{\text{Borrow}}$, the polarity is reversed. A subtraction is executed by adding the two's complement of the second operand. For rotate (`RRF`, `RLF`) instructions, this bit is loaded with either the high-order or low-order bit of the source register.

4.3.3 SPECIAL FUNCTION REGISTER

The Special Function Registers are registers used by the application to control the desired operation of peripheral functions in the device. The Special Function Registers occupy the 20 bytes of the data banks 0-59 and 100 bytes of the data banks 60-63, after the core registers.

The SFRs associated with the operation of the peripherals are described in the appropriate peripheral chapter of this data sheet.

4.3.4 GENERAL PURPOSE RAM

There are up to 80 bytes of GPR in each data memory bank.

4.3.4.1 Linear Access to GPR

The general purpose RAM can be accessed in a non-banked method via the FSRs. This can simplify access to large memory structures. See **Section 4.6.2 "Linear Data Memory"** for more information.

4.3.5 COMMON RAM

There are 16 bytes of common RAM accessible from all banks.

4.3.6 DEVICE MEMORY MAPS

The memory maps are as shown in Table 4-4 through Table 4-10.

TABLE 4-4: PIC16(L)F15324/44 MEMORY MAP, BANKS 0-7

	BANK 0		BANK 1		BANK 2		BANK 3		BANK 4		BANK 5		BANK 6		BANK 7
000h	Core Register (Table 4-3)	080h	Core Register (Table 4-3)	100h	Core Register (Table 4-3)	180h	Core Register (Table 4-3)	200h	Core Register (Table 4-3)	280h	Core Register (Table 4-3)	300h	Core Register (Table 4-3)	380h	Core Register (Table 4-3)
00Bh		08Bh		10Bh		18Bh		20Bh		28Bh		30Bh		38Bh	
00Ch	PORTA	08Ch	—	10Ch	—	18Ch	SSP1BUF	20Ch	TMR1L	28Ch	TMR2	30Ch	CCPR1L	38Ch	PWM6DCL
00Dh	PORTB(2)	08Dh	—	10Dh	—	18Dh	SSP1ADD	20Dh	TMR1H	28Dh	PR2	30Dh	CCPR1H	38Dh	PWM6DCH
00Eh	PORTC	08Eh	—	10Eh	—	18Eh	SSP1MASK	20Eh	T1CON	28Eh	T2CON	30Eh	CCP1CON	38Eh	PWM6CON
00Fh	—	08Fh	—	10Fh	—	18Fh	SSP1STAT	20Fh	T1GCON	28Fh	T2HLT	30Fh	CCP1CAP	38Fh	—
010h	—	090h	—	110h	—	190h	SSP1CON1	210h	T1GATE	290h	T2CLK	310h	CCPR2L	390h	—
011h	—	091h	—	111h	—	191h	SSP1CON2	211h	T1CLK	291h	T2ERS	311h	CCPR2H	391h	—
012h	TRISA	092h	—	112h	—	192h	SSP1CON3	212h	—	292h	—	312h	CCP2CON	392h	—
013h	TRISB(2)	093h	—	113h	—	193h	—	213h	—	293h	—	313h	CCP2CAP	393h	—
014h	TRISC	094h	—	114h	—	194h	—	214h	—	294h	—	314h	PWM3DCL	394h	—
015h	—	095h	—	115h	—	195h	—	215h	—	295h	—	315h	PWM3DCH	395h	—
016h	—	096h	—	116h	—	196h	—	216h	—	296h	—	316h	PWM3CON	396h	—
017h	—	097h	—	117h	—	197h	—	217h	—	297h	—	317h	—	397h	—
018h	LATA	098h	—	118h	—	198h	—	218h	—	298h	—	318h	PWM4DCL	398h	—
019h	LATB(2)	099h	—	119h	RC1REG	199h	—	219h	—	299h	—	319h	PWM4DCH	399h	—
01Ah	LATC	09Ah	—	11Ah	TX1REG	19Ah	—	21Ah	—	29Ah	—	31Ah	PWM4CON	39Ah	—
01Bh	—	09Bh	ADRESL	11Bh	SP1BRG1L	19Bh	—	21Bh	—	29Bh	—	31Bh	—	39Bh	—
01Ch	—	09Ch	ADRESH	11Ch	SP1BRG1H	19Ch	—	21Ch	—	29Ch	—	31Ch	PWM5DCL	39Ch	—
01Dh	—	09Dh	ADCON0	11Dh	RC1STA	19Dh	—	21Dh	—	29Dh	—	31Dh	PWM5DCH	39Dh	—
01Eh	—	09Eh	ADCON1	11Eh	TX1STA	19Eh	—	21Eh	—	29Eh	—	31Eh	PWM5CON	39Eh	—
01Fh	—	09Fh	ADACT	11Fh	BAUD1CON	19Fh	—	21Fh	—	29Fh	—	31Fh	—	39Fh	—
020h	General Purpose Register 96 Bytes	0A0h	General Purpose Register 80 Bytes	120h	General Purpose Register 80 Bytes	1A0h	General Purpose Register 80 Bytes	220h	General Purpose Register 80 Bytes	2A0h	General Purpose Register 80 Bytes	320h	General Purpose Register 16 Bytes	3A0h	Unimplemented Read as '0'
07Fh		0EFh		16Fh		1EFh		26Fh		2EFh		32Fh		3EFh	
												330h	Unimplemented Read as '0		
												36Fh			
		0F0h	Common RAM Accesses 70h-7Fh	170h	Common RAM Accesses 70h-7Fh	1F0h	Common RAM Accesses 70h-7Fh	270h	Common RAM Accesses 70h-7Fh	2F0h	Common RAM Accesses 70h-7Fh	370h	Common RAM Accesses 70h-7Fh	3F0h	Common RAM Accesses 70h-7Fh
		0FFh		17Fh		1FFh		27Fh		2FFh		37Fh		3FFh	

Note 1: Unimplemented locations read as '0'.

2: Present only in PIC16(L)F15344.

© 2017-2021 Microchip Technology Inc.

TABLE 4-5: PIC16(L)F15324/44 MEMORY MAP, BANKS 8-15

	BANK 8		BANK 9		BANK 10		BANK 11		BANK 12		BANK 13		BANK 14		BANK 15
400h	Core Register (Table 4-3)	480h	Core Register (Table 4-3)	500h	Core Register (Table 4-3)	580h	Core Register (Table 4-3)	600h	Core Register (Table 4-3)	680h	Core Register (Table 4-3)	700h	Core Register (Table 4-3)	780h	Core Register (Table 4-3)
40Bh		48Bh		50Bh		58Bh		60Bh		68Bh		70Bh		78Bh	
40Ch	—	48Ch	—	50Ch	—	58Ch	NCO1ACCL	60Ch	CWG1CLK	68Ch	—	70Ch	PIR0	78Ch	—
40Dh	—	48Dh	—	50Dh	—	58Dh	NCO1ACCH	60Dh	CWG1DAT	68Dh	—	70Dh	PIR1	78Dh	—
40Eh	—	48Eh	—	50Eh	—	58Eh	NCO1ACCU	60Eh	CWG1DBR	68Eh	—	70Eh	PIR2	78Eh	—
40Fh	—	48Fh	—	50Fh	—	58Fh	NCO1INCL	60Fh	CWG1DBF	68Fh	—	70Fh	PIR3	78Fh	—
410h	—	490h	—	510h	—	590h	NCO1INCH	610h	CWG1CON0	690h	—	710h	PIR4	790h	—
411h	—	491h	—	511h	—	591h	NCO1INCU	611h	CWG1CON1	691h	—	711h	PIR5	791h	—
412h	—	492h	—	512h	—	592h	NCO1CON	612h	CWG1AS0	692h	—	712h	PIR6	792h	—
413h	—	493h	—	513h	—	593h	NCO1CLK	613h	CWG1AS1	693h	—	713h	PIR7	793h	—
414h	—	494h	—	514h	—	594h	—	614h	CWG1STR	694h	—	714h	—	794h	—
415h	—	495h	—	515h	—	595h	—	615h	—	695h	—	715h	—	795h	—
416h	—	496h	—	516h	—	596h	—	616h	—	696h	—	716h	PIE0	796h	PMD0
417h	—	497h	—	517h	—	597h	—	617h	—	697h	—	717h	PIE1	797h	PMD1
418h	—	498h	—	518h	—	598h	—	618h	—	698h	—	718h	PIE2	798h	PMD2
419h	—	499h	—	519h	—	599h	—	619h	—	699h	—	719h	PIE3	799h	PMD3
41Ah	—	49Ah	—	51Ah	—	59Ah	—	61Ah	—	69Ah	—	71Ah	PIE4	79Ah	PMD4
41Bh	—	49Bh	—	51Bh	—	59Bh	—	61Bh	—	69Bh	—	71Bh	PIE5	79Bh	PMD5
41Ch	—	49Ch	—	51Ch	—	59Ch	TMR0	61Ch	—	69Ch	—	71Ch	PIE6	79Ch	—
41Dh	—	49Dh	—	51Dh	—	59Dh	PR0	61Dh	—	69Dh	—	71Dh	PIE7	79Dh	—
41Eh	—	49Eh	—	51Eh	—	59Eh	TMR0CON0	61Eh	—	69Eh	—	71Eh	—	79Eh	—
41Fh	—	49Fh	—	51Fh	—	59Fh	TMR0CON1	61Fh	—	69Fh	—	71Fh	—	79Fh	—
420h	Unimplemented Read as '0'	4A0h	Unimplemented Read as '0'	520h	Unimplemented Read as '0'	5A0h	Unimplemented Read as '0'	620h	Unimplemented Read as '0'	6A0h	Unimplemented Read as '0'	720h	Unimplemented Read as '0'	7A0h	Unimplemented Read as '0'
46Fh		4EFh		56Fh		5EFh		66Fh		6EFh		76Fh		7EFh	
470h	Common RAM Accesses 70h-7Fh	4F0h	Common RAM Accesses 70h-7Fh	570h	Common RAM Accesses 70h-7Fh	5F0h	Common RAM Accesses 70h-7Fh	670h	Common RAM Accesses 70h-7Fh	6F0h	Common RAM Accesses 70h-7Fh	770h	Common RAM Accesses 70h-7Fh	7F0h	Common RAM Accesses 70h-7Fh
47Fh		4FFh		57Fh		5FFh		67Fh		6FFh		77Fh		7FFh	

Note 1: Unimplemented locations read as '0'.

© 2017-2021 Microchip Technology Inc.

TABLE 4-6: PIC16(L)F15324/44 MEMORY MAP, BANKS 16-23

	BANK 16		BANK 17		BANK 18		BANK 19		BANK 20		BANK 21		BANK 22		BANK 23
800h	Core Register (Table 4-3)	880h	Core Register (Table 4-3)	900h	Core Register (Table 4-3)	980h	Core Register (Table 4-3)	A00h	Core Register (Table 4-3)	A80h	Core Register (Table 4-3)	B00h	Core Register (Table 4-3)	B80h	Core Register (Table 4-3)
80Bh		88Bh		90Bh		98Bh		A0Bh		A8Bh		B0Bh		B8Bh	
80Ch	WDTCON0	88Ch	CPUDOZE	90Ch	FVRCON	98Ch	—	A0Ch	—	A8Ch	—	B0Ch	—	B8Ch	—
80Dh	WDTCON1	88Dh	OSCCON1	90Dh	—	98Dh	—	A0Dh	—	A8Dh	—	B0Dh	—	B8Dh	—
80Eh	WDTL	88Eh	OSCCON2	90Eh	DAC1CON0	98Eh	—	A0Eh	—	A8Eh	—	B0Eh	—	B8Eh	—
80Fh	WDTH	88Fh	OSCCON3	90Fh	DAC1CON1	98Fh	CMOUT	A0Fh	—	A8Fh	—	B0Fh	—	B8Fh	—
810h	WDTU	890h	OSCSTAT1	910h	—	990h	CM1CON0	A10h	—	A90h	—	B10h	—	B90h	—
811h	BORCON	891h	OSCEN	911h	—	991h	CM1CON1	A11h	—	A91h	—	B11h	—	B91h	—
812h	VREGCON(2)	892h	OSCTUNE	912h	—	992h	CM1NCH	A12h	—	A92h	—	B12h	—	B92h	—
813h	PCON0	893h	OSCFRQ	913h	—	993h	CM1PCH	A13h	—	A93h	—	B13h	—	B93h	—
814h	PCON1	894h	—	914h	—	994h	CM2CON0	A14h	—	A94h	—	B14h	—	B94h	—
815h	—	895h	CLKRCON	915h	—	995h	CM2CON1	A15h	—	A95h	—	B15h	—	B95h	—
816h	—	896h	CLKCLK	916h	—	996h	CM2NCH	A16h	—	A96h	—	B16h	—	B96h	—
817h	—	897h	—	917h	—	997h	CM2PCH	A17h	—	A97h	—	B17h	—	B97h	—
818h	—	898h	—	918h	—	998h	—	A18h	—	A98h	—	B18h	—	B98h	—
819h	—	899h	—	919h	—	999h	—	A19h	RC2REG	A99h	—	B19h	—	B99h	—
81Ah	NVMADRL	89Ah	—	91Ah	—	99Ah	—	A1Ah	TX2REG	A9Ah	—	B1Ah	—	B9Ah	—
81Bh	NVMADRH	89Bh	—	91Bh	—	99Bh	—	A1Bh	SP2BRGL	A9Bh	—	B1Bh	—	B9Bh	—
81Ch	NVMDATL	89Ch	—	91Ch	—	99Ch	—	A1Ch	SP2BRGH	A9Ch	—	B1Ch	—	B9Ch	—
81Dh	NVMDATH	89Dh	—	91Dh	—	99Dh	—	A1Dh	RC2STA	A9Dh	—	B1Dh	—	B9Dh	—
81Eh	NVMCON1	89Eh	—	91Eh	—	99Eh	—	A1Eh	TX2STA	A9Eh	—	B1Eh	—	B9Eh	—
81Fh	NVMCON2	89Fh	—	91Fh	ZCDCON	99Fh	—	A1Fh	BAUD2CON	A9Fh	—	B1Fh	—	B9Fh	—
820h	Unimplemented Read as '0'	8A0h	Unimplemented Read as '0'	920h	Unimplemented Read as '0'	9A0h	Unimplemented Read as '0'	A20h	Unimplemented Read as '0'	AA0h	Unimplemented Read as '0'	B20h	Unimplemented Read as '0'	BA0h	Unimplemented Read as '0'
86Fh		8EFh		96Fh		9EFh		A6Fh		AEFh		B6Fh		BEFh	
870h	Common RAM Accesses 70h-7Fh	8F0h	Common RAM Accesses 70h-7Fh	970h	Common RAM Accesses 70h-7Fh	9F0h	Common RAM Accesses 70h-7Fh	A70h	Common RAM Accesses 70h-7Fh	AF0h	Common RAM Accesses 70h-7Fh	B70h	Common RAM Accesses 70h-7Fh	BF0h	Common RAM Accesses 70h-7Fh
87Fh		8FFh		97Fh		9FFh		A7Fh		AFFh		B7Fh		BFFh	

Note 1: Unimplemented locations read as '0'.
2: Register not implemented on LF devices.

© 2017-2021 Microchip Technology Inc.

TABLE 4-7: PIC16(L)F15324/44 MEMORY MAP, BANKS 56-63

	BANK 56		BANK 57		BANK 58		BANK 59		BANK 60		BANK 61		BANK 62		BANK 63
1C00h	Core Register (Table 4-3)	1C80h	Core Register (Table 4-3)	1D00h	Core Register (Table 4-3)	1D80h	Core Register (Table 4-3)	1E00h	Core Register (Table 4-3)	1E80h	Core Register (Table 4-3)	1F00h	Core Register (Table 4-3)	1F80h	Core Register (Table 4-3)
1C0Bh		1C8Bh		1D0Bh		1D8Bh		1E0Bh		1E8Bh		1F0Bh		1F8Bh	
1C0Ch	—	1C8Ch	—	1D0Ch	—	1D8Ch	—	1E0Ch	CLC Controls (See Table 4-8 for register mapping details)	1E8Ch	nnnPPS Controls (See Table 4-8 for register mapping details)	1F0Ch	RxyPPS Controls (See Table 4-8 for register mapping details)	1F8Ch	(See Table 4-8 for register mapping details)
1C0Dh	—	1C8Dh	—	1D0Dh	—	D8Dh1	—	1E0Dh		1E8Dh		1F0Dh		1F8Dh	
1C0Eh	—	1C8Eh	—	1D0Eh	—	1D8Eh	—	1E0Eh		1E8Eh		1F0Eh		1F8Eh	
1C0Fh	—	1C8Fh	—	1D0Fh	—	1D8Fh	—	1E0Fh		1E8Fh		1F0Fh		1F8Fh	
1C10h	—	1C90h	—	1D10h	—	1D90h	—	1E10h		1E90h		1F10h		1F90h	
1C11h	—	1C91h	—	1D11h	—	1D91h	—	1E11h		1E91h		1F11h		1F91h	
1C12h	—	1C92h	—	1D12h	—	1D92h	—	1E12h		1E92h		1F12h		1F92h	
1C13h	—	1C93h	—	1D13h	—	1D93h	—	1E13h		1E93h		1F13h		1F93h	
1C14h	—	1C94h	—	1D14h	—	1D94h	—	1E14h		1E94h		1F14h		1F94h	
1C15h	—	1C95h	—	1D15h	—	1D95h	—	1E15h		1E95h		1F15h		1F95h	
1C16h	—	1C96h	—	1D16h	—	1D96h	—	1E16h		1E96h		1F16h		1F96h	
1C17h	—	1C97h	—	1D17h	—	1D97h	—	1E17h		1E97h		1F17h		1F97h	
1C18h	—	1C98h	—	1D18h	—	1D98h	—	1E18h		1E98h		1F18h		1F98h	
1C19h	—	1C99h	—	1D19h	—	1D99h	—	1E19h		1E99h		1F19h		1F99h	
1C1Ah	—	1C9Ah	—	1D1Ah	—	1D9Ah	—	1E1Ah		1E9Ah		1F1Ah		1F9Ah	
1C1Bh	—	1C9Bh	—	1D1Bh	—	1D9Bh	—	1E1Bh		1E9Bh		1F1Bh		1F9Bh	
1C1Ch	—	1C9Ch	—	1D1Ch	—	1D9Ch	—	1E1Ch		1E9Ch		1F1Ch		1F9Ch	
1C1Dh	—	1C9Dh	—	1D1Dh	—	1D9Dh	—	1E1Dh		1E9Dh		1F1Dh		1F9Dh	
1C1Eh	—	1C9Eh	—	1D1Eh	—	1D9Eh	—	1E1Eh		1E9Eh		1F1Eh		1F9Eh	
1C1Fh	—	1C9Fh	—	1D1Fh	—	1D9Fh	—	1E1Fh		1E9Fh		1F1Fh		1F9Fh	
1C20h	Unimplemented Read as '0'	1CA0h	Unimplemented Read as '0'	1D20h	Unimplemented Read as '0'	1DA0h	Unimplemented Read as '0'	1E20h		1EA0h		1F20h		1FA0h	
1C6Fh		1CEFh		1D6Fh		1DEFh		1E6Fh		1EEFh		1F6Fh		1FEFh	
1C70h	Common RAM Accesses 70h-7Fh	1CF0h	Common RAM Accesses 70h-7Fh	1D70h	Common RAM Accesses 70h-7Fh	1DF0h	Common RAM Accesses 70h-7Fh	1E70h	Common RAM Accesses 70h-7Fh	1EF0h	Common RAM Accesses 70h-7Fh	1F70h	Common RAM Accesses 70h-7Fh	1FF0h	Common RAM Accesses 70h-7Fh
1C7Fh		1CFFh		1D7Fh		1DFFh		1E7Fh		1EFFh		1F7Fh		1FFFh	

Note 1: Unimplemented locations read as '0'.

2: The banks 24-55 have been omitted from the tables in the data sheet since the banks have unimplemented registers.

© 2017-2021 Microchip Technology Inc.

TABLE 4-8: PIC16(L)F15324/44 MEMORY MAP, BANKS 60, 61, 62, AND 63

	Bank 60		Bank 61		Bank 62		Bank 63
1E0Ch	—	1E8Ch	—	1F0Ch	—	1F8Ch	—
1E0Dh	—	1E8Dh	—	1F0Dh	—	1F8Dh	—
1E0Eh	—	1E8Eh	—	1F0Eh	—	1F8Eh	—
1E0Fh	CLCDATA	1E8Fh	PPSLOCK	1F0Fh	—	1F8Fh	—
1E10h	CLC1CON	1E90h	INTPPS	1F10h	RA0PPS	1F90h	—
1E11h	CLC1POL	1E91h	T0CKIPPS	1F11h	RA1PPS	1F91h	—
1E12h	CLC1SEL0	1E92h	T1CKIPPS	1F12h	RA2PPS	1F92h	—
1E13h	CLC1SEL1	1E93h	T1GPPS	1F13h	RA3PPS	1F93h	—
1E14h	CLC1SEL2	1E94h	—	1F14h	RA4PPS	1F94h	—
1E15h	CLC1SEL3	1E95h	—	1F15h	RA5PPS	1F95h	—
1E16h	CLC1GLS0	1E96h	—	1F16h	—	1F96h	—
1E17h	CLC1GLS1	1E97h	—	1F17h	—	1F97h	—
1E18h	CLC1GLS2	1E98h	—	1F18h	—	1F98h	—
1E19h	CLC1GLS3	1E99h	—	1F19h	—	1F99h	—
1E1Ah	CLC2CON	1E9Ah	—	1F1Ah	—	1F9Ah	—
1E1Bh	CLC2POL	1E9Bh	—	1F1Bh	—	1F9Bh	—
1E1Ch	CLC2SEL0	1E9Ch	T2INPPS	1F1Ch	RB4PPS(1)	1F9Ch	—
1E1Dh	CLC2SEL1	1E9Dh	—	1F1Dh	RB5PPS(1)	1F9Dh	—
1E1Eh	CLC2SEL2	1E9Eh	—	1F1Eh	RB6PPS(1)	1F9Eh	—
1E1Fh	CLC2SEL3	1E9Fh	—	1F1Fh	RB7PPS(1)	1F9Fh	—
1E20h	CLC2GLS0	1EA0h	—	1F20h	RC0PPS	1FA0h	—
1E21h	CLC2GLS1	1EA1h	CCP1PPS	1F21h	RC1PPS	1FA1h	—
1E22h	CLC2GLS2	1EA2h	CCP2PPS	1F22h	RC2PPS	1FA2h	—
1E23h	CLC2GLS3	1EA3h	—	1F23h	RC3PPS	1FA3h	—
1E24h	CLC3CON	1EA4h	—	1F24h	RC4PPS	1FA4h	—
1E25h	CLC3POL	1EA5h	—	1F25h	RC5PPS	1FA5h	—
1E26h	CLC3SEL0	1EA6h	—	1F26h	RC6PPS(1)	1FA6h	—
1E27h	CLC3SEL1	1EA7h	—	1F27h	RC7PPS(1)	1FA7h	—
1E28h	CLC3SEL2	1EA8h	—	1F28h	—	1FA8h	—
1E29h	CLC3SEL3	1EA9h	—	1F29h	—	1FA9h	—
1E2Ah	CLC3GLS0	1EAAh	—	1F2Ah	—	1FAAh	—
1E2Bh	CLC3GLS1	1EABh	—	1F2Bh	—	1FABh	—
1E2Ch	CLC3GLS2	1EACh	—	1F2Ch	—	1FACh	—
1E2Dh	CLC3GLS3	1EADh	—	1F2Dh	—	1FADh	—
1E2Eh	CLC4CON	1EAEh	—	1F2Eh	—	1FAEh	—
1E2Fh	CLC4POL	1EAFh	—	1F2Fh	—	1FAFh	—
1E30h	CLC4SEL0	1EB0h	—	1F30h	—	1FB0h	—
1E31h	CLC4SEL1	1EB1h	CWG1PPS	1F31h	—	1FB1h	—
1E32h	CLC4SEL2	1EB2h	—	1F32h	—	1FB2h	—
1E33h	CLC4SEL3	1EB3h	—	1F33h	—	1FB3h	—
1E34h	CLC4GLS0	1EB4h	—	1F34h	—	1FB4h	—
1E35h	CLC4GLS1	1EB5h	—	1F35h	—	1FB5h	—
1E36h	CLC4GLS2	1EB6h	—	1F36h	—	1FB6h	—
1E37h	CLC4GLS3	1EB7h	—	1F37h	—	1FB7h	—
1E38h	—	1EB8h	—	1F38h	ANSELA	1FB8h	—
1E39h	—	1EB9h	—	1F39h	WPUA	1FB9h	—
1E3Ah	—	1EBAh	—	1F3Ah	ODCONA	1FBAh	—
1E3Bh	—	1EBBh	CLCIN0PPS	1F3Bh	SLRCONA	1FBBh	—
1E3Ch	—	1EBCh	CLCIN1PPS	1F3Ch	INLVLA	1FBCh	—
1E3Dh	—	1EBDh	CLCIN2PPS	1F3Dh	IOCAP	1FBDh	—
1E3Eh	—	1EBEh	CLCIN3PPS	1F3Eh	IOCAN	1FBEh	—
1E3Fh	—	1EBFh	—	1F3Fh	IOCAF	1FBFh	—
1E40h	—	1EC0h	—	1F40h	—	1FC0h	—

Legend: = Unimplemented data memory locations, read as ‘0’

Note 1: Present only in PIC16(L)F15344.

TABLE 4-8: PIC16(L)F15324/44 MEMORY MAP, BANKS 60, 61, 62, AND 63 (CONTINUED)

Bank 60		Bank 61		Bank 62		Bank 63	
1E41h	—	1EC1h	—	1F41h	—	1FC1h	—
1E42h	—	1EC2h	—	1F42h	—	1FC2h	—
1E43h	—	1EC3h	ADACTPPS	1F43h	ANSELB(1)	1FC3h	—
1E44h	—	1EC4h	—	1F44h	WPUB(1)	1FC4h	—
1E45h	—	1EC5h	SSP1CLKPPS	1F45h	ODCONB(1)	1FC5h	—
1E46h	—	1EC6h	SSP1DATPPS	1F46h	SLRCONB(1)	1FC6h	—
1E47h	—	1EC7h	SSP1SSPPS	1F47h	INLVLB(1)	1FC7h	—
1E48h	—	1EC8h	—	1F48h	IOCBP(1)	1FC8h	—
1E49h	—	1EC9h	—	1F49h	IOCBN(1)	1FC9h	—
1E4Ah	—	1ECAh	—	1F4Ah	IOCBF(1)	1FCAh	—
1E4Bh	—	1ECBh	RXDT1PPS	1F4Bh	—	1FCBh	—
1E4Ch	—	1ECCh	TXCK1PPS	1F4Ch	—	1FCCh	—
1E4Dh	—	1ECDh	RXD2TPPS	1F4Dh	—	1FCDh	—
1E4Eh	—	1ECEh	TXCK2PPS	1F4Eh	ANSELC	1FCEh	—
1E4Fh	—	1ECFh	—	1F4Fh	WPUC	1FCFh	—
1E50h	—	1ED0h	—	1F50h	ODCONC	1FD0h	—
1E51h	—	1ED1h	—	1F51h	SLRCONC	1FD1h	—
1E52h	—	1ED2h	—	1F52h	INLVLC	1FD2h	—
1E53h	—	1ED3h	—	1F53h	IOCCP	1FD3h	—
1E54h	—	1ED4h	—	1F54h	IOCCN	1FD4h	—
1E55h	—	1ED5h	—	1F55h	IOCCF	1FD5h	—
1E56h	—	1ED6h	—	1F56h	—	1FD6h	—
1E57h	—	1ED7h	—	1F57h	—	1FD7h	—
1E58h	—	1ED8h	—	1F58h	—	1FD8h	—
1E59h	—	1ED9h	—	1F59h	—	1FD9h	—
1E5Ah	—	1EDAh	—	1F5Ah	—	1FDAh	—
1E5Bh	—	1EDBh	—	1F5Bh	—	1FDBh	—
1E5Ch	—	1EDCh	—	1F5Ch	—	1FDCh	—
1E5Dh	—	1EDDh	—	1F5Dh	—	1FDDh	—
1E5Eh	—	1EDEh	—	1F5Eh	—	1FDEh	—
1E5Fh	—	1EDFh	—	1F5Fh	—	1FDFh	—
1E60h	—	1EE0h	—	1F60h	—	1FE0h	—
1E61h	—	1EE1h	—	1F61h	—	1FE1h	—
1E62h	—	1EE2h	—	1F62h	—	1FE2h	—
1E63h	—	1EE3h	—	1F63h	—	1FE3h	BSR_ICDSHAD
1E64h	—	1EE4h	—	1F64h	—	1FE4h	STATUS_SHAD
1E65h	—	1EE5h	—	1F65h	—	1FE5h	WREG_SHAD
1E66h	—	1EE6h	—	1F66h	—	1FE6h	BSR_SHAD
1E67h	—	1EE7h	—	1F67h	—	1FE7h	PCLATH_SHAD
1E68h	—	1EE8h	—	1F68h	—	1FE8h	FSR0L_SHAD
1E69h	—	1EE9h	—	1F69h	—	1FE9h	FSR0H_SHAD
1E6Ah	—	1EEAh	—	1F6Ah	—	1FEAh	FSR1L_SHAD
1E6Bh	—	1EEBh	—	1F6Bh	—	1FEBh	FSR1H_SHAD
1E6Ch	—	1EECh	—	1F6Ch	—	1FECh	—
1E6Dh	—	1EEDh	—	1F6Dh	—	1FEDh	STKPTR
1E6Eh	—	1EEEh	—	1F6Eh	—	1FEEh	TOSL
1E6Fh	—	1EEFh	—	1F6Fh	—	1FEFh	TOSH

Legend: = Unimplemented data memory locations, read as ‘0’

Note 1: Present only in PIC16(L)F15344.

TABLE 4-9: SPECIAL FUNCTION REGISTER SUMMARY BANKS 0-63 (ALL BANKS)

Bank Offset Bank 0-Bank 63	Name	Bit 7	Bit 6	Bit 5	Bit 4	Bit 3	Bit 2	Bit 1	Bit 0	Value on: POR, BOR	Value on: MCLR
All Banks											
x00h or x80h	INDF0	Addressing this location uses contents of FSR0H/FSR0L to address data memory (not a physical register)								xxxx xxxx	xxxx xxxx
x01h or x81h	INDF1	Addressing this location uses contents of FSR1H/FSR1L to address data memory (not a physical register)								xxxx xxxx	xxxx xxxx
x02h or x82h	PCL	PCL								0000 0000	0000 0000
x03h or x83h	STATUS	—	—	—	$\overline{TO}$	$\overline{PD}$	Z	DC	C	---1 1000	---q quuu
x04h or x84h	FSR0L	FSR0L	Indirect Data Memory Address 0 Low Pointer							0000 0000	uuuu uuuu
x05h or x85h	FSR0H	FSR0H	Indirect Data Memory Address 0 High Pointer							0000 0000	0000 0000
x06h or x86h	FSR1L	FSR1L	Indirect Data Memory Address 1 Low Pointer							0000 0000	uuuu uuuu
x07h or x87h	FSR1H	FSR1H	Indirect Data Memory Address 1 High Pointer							0000 0000	0000 0000
x08h or x88h	BSR	—	—	BSR[5:0]						--00 0000	--00 0000
x09h or x89h	WREG	Working Register								0000 0000	uuuu uuuu
x0Ah or x8Ah	PCLATH	—	Write Buffer for the upper 7 bits of the Program Counter							-000 0000	-000 0000
x0Bh or x8Bh	INTCON	GIE	PEIE	—	—	—	—	—	INTEDG	00-- ---1	00-- ---1

Legend: x = unknown, u = unchanged, q = depends on condition, - = unimplemented, read as '0', r = reserved. Shaded locations unimplemented, read as '0'.

Note 1: These Registers can be accessed from any bank.

TABLE 4-10: SPECIAL FUNCTION REGISTER SUMMARY BANKS 0-63

Address	Name	Bit 7	Bit 6	Bit 5	Bit 4	Bit 3	Bit 2	Bit 1	Bit 0	Value on: POR, BOR	Value on: MCLR
Bank 0											
CPU CORE REGISTERS; see Table 4-9 for specifics											
00Ch	PORTA	—	—	RA5	RA4	RA3	RA2	RA1	RA0	--xx xxxx	--uu uuuu
00Dh	PORTB(1)	RB7	RB6	RB5	RB4	—	—	—	—	xxxx ----	uuuu ----
00Eh	PORTC	RC7(1)	RC6(1)	RC5	RC4	RC3	RC2	RC1	RC0	xxxx xxxx	uuuu uuuu
00Fh	—	Unimplemented								—	—
010h	—	Unimplemented								—	—
011h	—	Unimplemented								---- ----	---- ----
012h	TRISA	—	—	TRISA5	TRISA4	—	TRISA2	TRISA1	TRISA0	--11 -111	--11 -111
013h	TRISB(1)	TRISB7	TRISB6	TRISB5	TRISB4	—	—	—	—	xxxx ----	uuuu ----
014h	TRISC	TRISC7(1)	TRISC6(1)	TRISC5	TRISC4	TRISC3	TRISC2	TRISC1	TRISC0	1111 1111	1111 1111
015h	—	Unimplemented								—	—
016h	—	Unimplemented								—	—
017h	—	Unimplemented								—	—
018h	LATA	—	—	LATA5	LATA4	—	LATA2	LATA1	LATA0	--xx xxxx	--uu uuuu
019h	LATB(1)	LATB7	LATB6	LATB5	LATB4	—	—	—	—	xxxx ----	uuuu ----
01Ah	LATC	LATC7(1)	LATC6(1)	LATC5	LATC4	LATC3	LATC2	LATC1	LATC0	xxxx xxxx	uuuu uuuu
01Bh	—	Unimplemented								—	—
01Ch	—	Unimplemented								—	—
01Dh	—	Unimplemented								—	—
01Eh	—	Unimplemented								—	—
01Fh	—	Unimplemented								—	—

Legend: x = unknown, u = unchanged, q = depends on condition, - = unimplemented, read as '0', r = reserved. Shaded locations unimplemented, read as '0'.

Note 1: Present only in PIC16(L)F15344.

© 2017-2021 Microchip Technology Inc.

TABLE 4-10: SPECIAL FUNCTION REGISTER SUMMARY BANKS 0-63 (CONTINUED)

Address	Name	Bit 7	Bit 6	Bit 5	Bit 4	Bit 3	Bit 2	Bit 1	Bit 0	Value on: POR, BOR	Value on: MCLR
Bank 1											
CPU CORE REGISTERS; see Table 4-3 for specifics											
08Ch — 09Ah	—	Unimplemented								—	—
09Bh	ADRESL	ADC Result Register Low								xxxx xxxx	uuuu uuuu
09Ch	ADRESH	ADC Result Register High								xxxx xxxx	uuuu uuuu
09Dh	ADCON0	CHS[5:0]						GO/$\overline{\text{DONE}}$	ADON	0000 0000	0000 0000
09Eh	ADCON1	ADFM	ADCS[2:0]			—	—	ADPREF[1:0]		0000 --00	0000 --00
09Fh	ADACT	—	—	—	—	ADACT[3:0]				---- 0000	---- 0000

Legend: x = unknown, u = unchanged, q = depends on condition, - = unimplemented, read as '0', r = reserved. Shaded locations unimplemented, read as '0'.

© 2017-2021 Microchip Technology Inc.

TABLE 4-10: SPECIAL FUNCTION REGISTER SUMMARY BANKS 0-63 (CONTINUED)

Address	Name	Bit 7	Bit 6	Bit 5	Bit 4	Bit 3	Bit 2	Bit 1	Bit 0	Value on: POR, BOR	Value on: MCLR
Bank 2											
CPU CORE REGISTERS; see Table 4-3 for specifics											
10Ch — 118h	—	Unimplemented								—	—
119h	RC1REG	EUSART Receive Data Register								0000 0000	0000 0000
11Ah	TX1REG	EUSART Transmit Data Register								0000 0000	0000 0000
11Bh	SP1BRGL	SP1BRG[7:0]								0000 0000	0000 0000
11Ch	SP1BRGH	SP1BRG[15:8]								0000 0000	0000 0000
11Dh	RC1STA	SPEN	RX9	SREN	CREN	ADDEN	FERR	OERR	RX9D	0000 0000	0000 0000
11Eh	TX1STA	CSRC	TX9	TXEN	SYNC	SENDB	BRGH	TRMT	TX9D	0000 0010	0000 0010
11Fh	BAUD1CON	ABDOVF	RCIDL	—	SCKP	BRG16	—	WUE	ABDEN	01-0 0-00	01-0 0-00

Legend: x = unknown, u = unchanged, q = depends on condition, - = unimplemented, read as '0', r = reserved. Shaded locations unimplemented, read as '0'.

© 2017-2021 Microchip Technology Inc.

TABLE 4-10: SPECIAL FUNCTION REGISTER SUMMARY BANKS 0-63 (CONTINUED)

Address	Name	Bit 7	Bit 6	Bit 5	Bit 4	Bit 3	Bit 2	Bit 1	Bit 0	Value on: POR, BOR	Value on: MCLR
Bank 3											
CPU CORE REGISTERS; see Table 4-3 for specifics											
18Ch	SSP1BUF	Synchronous Serial Port Receive Buffer/Transmit Register								xxxx xxxx	xxxx xxxx
18Dh	SSP1ADD	ADD[7:0]								0000 0000	0000 0000
18Eh	SSP1MSK	MSK[7:0]								1111 1111	1111 1111
18Fh	SSP1STAT	SMP	CKE	D/$\overline{A}$	P	S	R/$\overline{W}$	UA	BF	0000 0000	0000 0000
190h	SSP1CON1	WCOL	SSPOV	SSPEN	CKP	SSPM3	SSPM2	SSPM1	SSPM0	0000 0000	0000 0000
191h	SSP1CON2	GCEN	ACKSTAT	ACKDT	ACKEN	RCEN	PEN	RSEN	SEN	0000 0000	0000 0000
192h	SSP1CON3	ACKTIM	PCIE	SCIE	BOEN	SDAHT	SBCDE	AHEN	DHEN	0000 0000	0000 0000
193h — 19Fh	—	Unimplemented								—	—

Legend: x = unknown, u = unchanged, q = depends on condition, - = unimplemented, read as '0', r = reserved. Shaded locations unimplemented, read as '0'.

© 2017-2021 Microchip Technology Inc.

TABLE 4-10: SPECIAL FUNCTION REGISTER SUMMARY BANKS 0-63 (CONTINUED)

Address	Name	Bit 7	Bit 6	Bit 5	Bit 4	Bit 3	Bit 2	Bit 1	Bit 0	Value on: POR, BOR	Value on: MCLR
Bank 4											
CPU CORE REGISTERS; see Table 4-3 for specifics											
20Ch	TMR1L	Holding Register for the Least Significant Byte of the 16-bit TMR1 Register								0000 0000	uuuu uuuu
20Dh	TMR1H	Holding Register for the Most Significant Byte of the 16-bit TMR1 Register								0000 0000	uuuu uuuu
20Eh	T1CON	—	—	CKPS[1:0]		—	$\overline{\text{SYNC}}$	RD16	ON	--00 -000	--uu -u0u
20Fh	T1GCON	GE	GPOL	GTM	GSPM	GGO/$\overline{\text{DONE}}$	GVAL	—	—	0000 0x--	uuuu ux--
210h	T1GATE	—	—	—	GSS[4:0]					---0 0000	---u uuuu
211h	T1CLK	—	—	—	—	CS[3:0]				---- 0000	---- uuuu
212h — 21Fh	—	Unimplemented								—	—

Legend: x = unknown, u = unchanged, q = depends on condition, - = unimplemented, read as '0', r = reserved. Shaded locations unimplemented, read as '0'.

© 2017-2021 Microchip Technology Inc.

TABLE 4-10: SPECIAL FUNCTION REGISTER SUMMARY BANKS 0-63 (CONTINUED)

Address	Name	Bit 7	Bit 6	Bit 5	Bit 4	Bit 3	Bit 2	Bit 1	Bit 0	Value on: POR, BOR	Value on: MCLR
Bank 5											
CPU CORE REGISTERS; see Table 4-3 for specifics											
28Ch	T2TMR	Holding Register for the 8-bit TMR2 Register								0000 0000	0000 0000
28Dh	T2PR	TMR2 Period Register								1111 1111	1111 1111
28Eh	T2CON	ON	CKPS[2:0]			OUTPS[3:0]				0000 0000	0000 0000
28Fh	T2HLT	PSYNC	CKPOL	CKSYNC	MODE[4:0]					0000 0000	0000 0000
290h	T2CLKCON	—	—	—	—	CS[3:0]				---- 0000	---- 0000
291h	T2RST	—	—	—	—	RSEL[3:0]				---- 0000	---- 0000
292h — 29Fh	—	Unimplemented								—	—

Legend: x = unknown, u = unchanged, q = depends on condition, - = unimplemented, read as '0', r = reserved. Shaded locations unimplemented, read as '0'.

© 2017-2021 Microchip Technology Inc.

TABLE 4-10: SPECIAL FUNCTION REGISTER SUMMARY BANKS 0-63 (CONTINUED)

Address	Name	Bit 7	Bit 6	Bit 5	Bit 4	Bit 3	Bit 2	Bit 1	Bit 0	Value on: POR, BOR	Value on: MCLR
Bank 6											
CPU CORE REGISTERS; see Table 4-3 for specifics											
30Ch	CCPR1L	Capture/Compare/PWM Register 1 (LSB)								xxxx xxxx	uuuu uuuu
30Dh	CCPR1H	Capture/Compare/PWM Register 1 (MSB)								xxxx xxxx	uuuu uuuu
30Eh	CCP1CON	EN	—	OUT	FMT	MODE[3:0]				0-00 0000	0-00 0000
30Fh	CCP1CAP	—	—	—	—	—	CTS[2:0]			---- -000	---- -000
310h	CCPR2L	Capture/Compare/PWM Register 2 (LSB)								xxxx xxxx	uuuu uuuu
311h	CCPR2H	Capture/Compare/PWM Register 2 (MSB)								xxxx xxxx	uuuu uuuu
312h	CCP2CON	EN	—	OUT	FMT	MODE[3:0]				0-00 0000	0-00 0000
313h	CCP2CAP	—	—	—	—	—	CTS[2:0]			---- -000	---- -000
314h	PWM3DCL	DC[1:0]		—	—	—	—	—	—	xx-- ----	uu-- ----
315h	PWM3DCH	DC[9:0]								xxxx xxxx	uuuu uuuu
316h	PWM3CON	EN	—	OUT	POL	—	—	—	—	0-00 ----	0-00 ----
317h	—	Unimplemented								—	—
318h	PWM4DCL	DC[1:0]		—	—	—	—	—	—	xx-- ----	uu-- ----
319h	PWM4DCH	DC[9:0]								xxxx xxxx	uuuu uuuu
31Ah	PWM4CON	EN	—	OUT	POL	—	—	—	—	0-00 ----	0-00 ----
31Bh	—	Unimplemented								—	—
31Ch	PWM5DCL	DC[1:0]		—	—	—	—	—	—	xx-- ----	uu-- ----
31Dh	PWM5DCH	DC[9:0]								xxxx xxxx	uuuu uuuu
31Eh	PWM5CON	EN	—	OUT	POL	—	—	—	—	0-00 ----	0-00 ----
31Fh	—	Unimplemented								—	—

Legend: x = unknown, u = unchanged, q = depends on condition, - = unimplemented, read as '0', r = reserved. Shaded locations unimplemented, read as '0'.

© 2017-2021 Microchip Technology Inc.

TABLE 4-10: SPECIAL FUNCTION REGISTER SUMMARY BANKS 0-63 (CONTINUED)

Address	Name	Bit 7	Bit 6	Bit 5	Bit 4	Bit 3	Bit 2	Bit 1	Bit 0	Value on: POR, BOR	Value on: MCLR
Bank 7											
CPU CORE REGISTERS; see Table 4-3 for specifics											
38Ch	PWM6DCL	DC[1:0]		—	—	—	—	—	—	xx-- ----	uu-- ----
38Dh	PWM6DCH	DC[9:0]								xxxx xxxx	uuuu uuuu
38Eh	PWM6CON	EN	—	OUT	POL	—	—	—	—	0-00 ----	0-00 ----
38Fh — 39Fh	—	Unimplemented								—	—

Legend: x = unknown, u = unchanged, q = depends on condition, - = unimplemented, read as '0', r = reserved. Shaded locations unimplemented, read as '0'.

© 2017-2021 Microchip Technology Inc.

TABLE 4-10: SPECIAL FUNCTION REGISTER SUMMARY BANKS 0-63 (CONTINUED)

Address	Name	Bit 7	Bit 6	Bit 5	Bit 4	Bit 3	Bit 2	Bit 1	Bit 0	Value on: POR, BOR	Value on: MCLR
Bank 8-10											
CPU CORE REGISTERS; see Table 4-3 for specifics											
x0Ch/ x8Ch — x1Fh/ x9Fh	—	Unimplemented									

Legend: x = unknown, u = unchanged, q = depends on condition, - = unimplemented, read as '0', r = reserved. Shaded locations unimplemented, read as '0'.

© 2017-2021 Microchip Technology Inc.

TABLE 4-10: SPECIAL FUNCTION REGISTER SUMMARY BANKS 0-63 (CONTINUED)

Address	Name	Bit 7	Bit 6	Bit 5	Bit 4	Bit 3	Bit 2	Bit 1	Bit 0	Value on: POR, BOR	Value on: MCLR
Bank 11											
CPU CORE REGISTERS; see Table 4-3 for specifics											
58Ch	NCO1ACCL	NCO1ACC[7:0]								0000 0000	0000 0000
58Dh	NCO1ACCH	NCO1ACC[15:8]								0000 0000	0000 0000
58Eh	NCO1ACCU	—	—	—	—	NCO1ACC[19:16]				---- 0000	---- 0000
58Fh	NCO1INCL	NCO1INC[7:0]								0000 0001	0000 0001
590h	NCO1INCH	NCO1INC[15:8]								0000 0000	0000 0000
591h	NCO1INCU	—	—	—	—	NCO1INC[19:16]				---- 0000	---- 0000
592h	NCO1CON	N1EN	—	N1OUT	N1POL	—	—	—	N1PFM	0-00 ---0	0-00 ---0
593h	NCO1CLK	N1PWS[2:0]			—	—	N1CKS[2:0]			000- -000	000- -000
594h	—	Unimplemented								—	—
595h	—	Unimplemented								—	—
596h	—	Unimplemented								—	—
597h	—	Unimplemented								—	—
598h	—	Unimplemented								—	—
599h	—	Unimplemented								—	—
59Ah	—	Unimplemented								—	—
59Bh	—	Unimplemented								—	—
59Ch	TMR0L	Holding Register for the Least Significant Byte of the 16-bit TMR0 Register								0000 0000	0000 0000
59Dh	TMR0H	Holding Register for the Most Significant Byte of the 16-bit TMR0 Register								1111 1111	1111 1111
59Eh	T0CON0	T0EN	—	T0OUT	T016BIT	T0OUTPS[3:0]				0-00 0000	0-00 0000
59Fh	T0CON1	T0CS[2:0]			T0ASYNC	T0CKPS[3:0]				0000 0000	0000 0000

Legend: x = unknown, u = unchanged, q = depends on condition, - = unimplemented, read as '0', r = reserved. Shaded locations unimplemented, read as '0'.

© 2017-2021 Microchip Technology Inc.

TABLE 4-10: SPECIAL FUNCTION REGISTER SUMMARY BANKS 0-63 (CONTINUED)

Address	Name	Bit 7	Bit 6	Bit 5	Bit 4	Bit 3	Bit 2	Bit 1	Bit 0	Value on: POR, BOR	Value on: MCLR
Bank 12											
CPU CORE REGISTERS; see Table 4-3 for specifics											
60Ch	CWG1CLKCON	—	—	—	—	—	—	—	CS	---- ---0	---- ---0
60Dh	CWG1DAT	—	—	—	—	DAT[3:0]				---- 0000	---- 0000
60Eh	CWG1DBR	—	—	DBR[5:0]						--00 0000	--00 0000
60Fh	CWG1DBF	—	—	DBF[5:0]						--00 0000	--00 0000
610h	CWG1CON0	EN	LD	—	—	—	MODE[2:0]			00-- -000	00-- -000
611h	CWG1CON1	—	—	IN	—	POLD	POLC	POLB	POLA	--x- 0000	--u- 0000
612h	CWG1AS0	SHUTDOWN	REN	LSBD[2:0]		LSAC[2:0]		—	—	0001 01--	0001 01--
613h	CWG1AS1	—	—	—	AS4E	AS3E	AS2E	AS1E	AS0E	---0 0000	---u 0000
614h	CWG1STR	OVRD	OVRC	OVRB	OVRA	STRD	STRC	STRB	STRA	0000 0000	0000 0000
615h — 61Fh	—	Unimplemented								—	—

Legend: x = unknown, u = unchanged, q = depends on condition, - = unimplemented, read as '0', r = reserved. Shaded locations unimplemented, read as '0'.

© 2017-2021 Microchip Technology Inc.

TABLE 4-10: SPECIAL FUNCTION REGISTER SUMMARY BANKS 0-63 (CONTINUED)

Address	Name	Bit 7	Bit 6	Bit 5	Bit 4	Bit 3	Bit 2	Bit 1	Bit 0	Value on: POR, BOR	Value on: MCLR
Bank 13											
CPU CORE REGISTERS; see Table 4-3 for specifics											
68Ch — 69Fh	—	Unimplemented								—	—

Legend: x = unknown, u = unchanged, q = depends on condition, - = unimplemented, read as '0', r = reserved. Shaded locations unimplemented, read as '0'.

© 2017-2021 Microchip Technology Inc.

TABLE 4-10: SPECIAL FUNCTION REGISTER SUMMARY BANKS 0-63 (CONTINUED)

Address	Name	Bit 7	Bit 6	Bit 5	Bit 4	Bit 3	Bit 2	Bit 1	Bit 0	Value on: POR, BOR	Value on: MCLR
Bank 14											
CPU CORE REGISTERS; see Table 4-3 for specifics											
70Ch	PIR0	—	—	TMR0IF	IOCIF	—	—	—	INTF	--00 ---0	--00 ---0
70Dh	PIR1	OSFIF	CSWIF	—	—	—	—	—	ADIF	00-- --00	00-- --00
70Eh	PIR2	—	ZCDIF	—	—	—	—	C2IF	C1IF	-0-- --00	-0-- --00
70Fh	PIR3	RC2IF	TX2IF	RC1IF	TX1IF	—	—	BCL1IF	SSP1IF	0000 --00	0000 --00
710h	PIR4	—	—	—	—	—	—	TMR2IF	TMR1IF	---- --00	---- --00
711h	PIR5	CLC4IF	CLC3IF	CLC2IF	CLC1IF	—	—	—	TMR1GIF	0000 ---0	0000 ---0
712h	PIR6	—	—	—	—	—	—	CCP2IF	CCP1IF	---- --00	---- --00
713h	PIR7	—	—	NVMIF	NCO1IF	—	—	—	CWG1IF	--00 ---0	--00 ---0
714h	—	Unimplemented								—	—
715h	—	Unimplemented								—	—
716h	PIE0	—	—	TMR0IE	IOCIE	—	—	—	INTE	--00 ---0	--00 ---0
717h	PIE1	OSFIE	CSWIE	—	—	—	—	—	ADIE	00-- --00	00-- --00
718h	PIE2	—	ZCDIE	—	—	—	—	C2IE	C1IE	-0-- --00	-0-- --00
719h	PIE3	RC2IE	TX2IE	RC1IE	TX1IE	—	—	BCL1IE	SSP1IE	0000 --00	0000 --00
71Ah	PIE4	—	—	—	—	—	—	TMR2IE	TMR1IE	---- --00	---- --00
71Bh	PIE5	CLC4IE	CLC3IE	CLC2IE	CLC1IE	—	—	—	TMR1GIE	0000 ---0	0000 ---0
71Ch	PIE6	—	—	—	—	—	—	CCP2IE	CCP1IE	---- --00	---- --00
71Dh	PIE7	—	—	NVMIE	NCO1IE	—	—	—	CWG1IE	--00 ---0	--00 ---0
71Eh	—	Unimplemented								—	—
71Fh	—	Unimplemented								—	—

Legend: x = unknown, u = unchanged, q = depends on condition, - = unimplemented, read as '0', r = reserved. Shaded locations unimplemented, read as '0'.

© 2017-2021 Microchip Technology Inc.

TABLE 4-10: SPECIAL FUNCTION REGISTER SUMMARY BANKS 0-63 (CONTINUED)

Address	Name	Bit 7	Bit 6	Bit 5	Bit 4	Bit 3	Bit 2	Bit 1	Bit 0	Value on: POR, BOR	Value on: MCLR
Bank 15											
CPU CORE REGISTERS; see Table 4-3 for specifics											
78Ch — 795h	—	Unimplemented								—	—
796h	PMD0	SYSCMD	FVRMD	—	—	—	NVMMD	CLKRMD	IOCMD	00-- -000	00-- -000
797h	PMD1	NCO1MD	—	—	—	—	TMR2MD	TMR1MD	TMR0MD	0--- -000	0--- -000
798h	PMD2	—	DAC1MD	ADCMD	—	—	CMP2MD	CMP1MD	ZCDMD	-00- -000	-00- -000
799h	PMD3	—	—	PWM6MD	PWM5MD	PWM4MD	PWM3MD	CCP2MD	CCP1MD	--00 0000	--00 0000
79Ah	PMD4	UART2MD	UART1MD	—	MSSP1MD	—	—	—	CWG1MD	00-0 ---0	00-0 ---0
79Bh	PMD5	—	—	—	CLC4MD	CLC3MD	CLC2MD	CLC1MD	—	---0 000-	---0 000-
79Ch	—	Unimplemented								—	—
79Dh	—	Unimplemented								—	—
79Eh	—	Unimplemented								—	—
79Fh	—	Unimplemented								—	—

Legend: x = unknown, u = unchanged, q = depends on condition, - = unimplemented, read as '0', r = reserved. Shaded locations unimplemented, read as '0'.

© 2017-2021 Microchip Technology Inc.

TABLE 4-10: SPECIAL FUNCTION REGISTER SUMMARY BANKS 0-63 (CONTINUED)

Address	Name	Bit 7	Bit 6	Bit 5	Bit 4	Bit 3	Bit 2	Bit 1	Bit 0	Value on: POR, BOR	Value on: MCLR
Bank 16											
CPU CORE REGISTERS; see Table 4-3 for specifics											
80Ch	WDTCON0	—	—	WDTPS[4:0]					SWDTEN	--qq qqq0	--qq qqq0
80Dh	WDTCON1	—	WDTCS[2:0]			—	WINDOW[2:0]			-qqq -qqq	-qqq -qqq
80Eh	WDTPSL	PSCNT[7:0]								0000 0000	0000 0000
80Fh	WDTPSH	PSCNT[15:8]								0000 0000	0000 0000
810h	WDTTMR	—	WDTTMR[3:0]				STATE	PSCNT17	PSCNT16	xxxx x000	xxxx x000
811h	BORCON	SBOREN	—	—	—	—	—	—	BORRDY	1--- ---q	u--- ---u
812h	VREGCON	—	—	—	—	—	—	VREGPM(1)	—	---- --0-	---- --0-
813h	PCON0	STKOVF	STKUNF	$\overline{\text{WDTWV}}$	$\overline{\text{RWDT}}$	$\overline{\text{RMCLR}}$	$\overline{\text{RI}}$	$\overline{\text{POR}}$	$\overline{\text{BOR}}$	0011 110q	qqqq qquu
814h	PCON1	—	—	—	—	—	—	$\overline{\text{MEMV}}$	—	---- --1-	---- --u-
815h	—	Unimplemented								—	—
816h	—	Unimplemented								—	—
817h	—	Unimplemented								—	—
818h	—	Unimplemented								—	—
819h	—	Unimplemented								—	—
81Ah	NVMADRL	NVMADR[7:0]								xxxx xxxx	uuuu uuuu
81Bh	NVMADRH	—	NVMADR[14:8]							-xxx xxxx	-uuu uuuu
81Ch	NVMDATL	NVMDAT[7:0]								0000 0000	0000 0000
81Dh	NVMDATH	—	—	NVMDAT[13:8]						--00 0000	--00 0000
81Eh	NVMCON1	—	NVMREGS	LWLO	FREE	WRERR	WREN	WR	RD	-000 x000	-000 q000
81Fh	NVMCON2	NVMCON2[7:0]								xxxx xxxx	uuuu uuuu

Legend: x = unknown, u = unchanged, q = depends on condition, - = unimplemented, read as '0', r = reserved. Shaded locations unimplemented, read as '0'.
Note 1: Present only on PIC16F15324/44.

© 2017-2021 Microchip Technology Inc.

TABLE 4-10: SPECIAL FUNCTION REGISTER SUMMARY BANKS 0-63 (CONTINUED)

Address	Name	Bit 7	Bit 6	Bit 5	Bit 4	Bit 3	Bit 2	Bit 1	Bit 0	Value on: POR, BOR	Value on: MCLR
Bank 17											
CPU CORE REGISTERS; see Table 4-3 for specifics											
88Ch	CPUDOZE	IDLEN	DOZEN	ROI	DOE	—	DOZE2	DOZE1	DOZE0	0000 -000	u000 -000
88Dh	OSCCON1	—	NOSC[2:0]			NDIV[3:0]				-qqq 0000	-qqq 0000
88Eh	OSCCON2	—	COSC[2:0]			CDIV[3:0]				-qqq qqqq	-qqq qqqq
88Fh	OSCCON3	CSWHOLD	—	—	ORDY	NOSCR	—	—	—	0--0 0---	0--0 0---
890h	OSCSTAT	EXTOR	HFOR	MFOR	LFOR	—	ADOR	—	PLLR	q000 -q-0	qqqq -q-q
891h	OSCEN	EXTOEN	HFOEN	MFOEN	LFOEN	—	ADOEN	—	—	0000 -0--	0000 -0--
892h	OSCTUNE	—	—	HFTUN[5:0]						--10 0000	--10 0000
893h	OSCFRQ	—	—	—	—	—	HFFRQ[2:0]			---- -qqq	---- -qqq
894h	—	Unimplemented								—	—
895h	CLKRCON	CLKREN	—	—	CLKRDC[1:0]		CLKRDIV[2:0]			0--x xxxx	0--u uuuu
896h	CLKRCLK	—	—	—	—	CLKRCLK[3:0]				---- 0000	---- 0000
897h — 89Fh	—	Unimplemented								—	—

Legend: x = unknown, u = unchanged, q = depends on condition, - = unimplemented, read as '0', r = reserved. Shaded locations unimplemented, read as '0'.

© 2017-2021 Microchip Technology Inc.

TABLE 4-10: SPECIAL FUNCTION REGISTER SUMMARY BANKS 0-63 (CONTINUED)

Address	Name	Bit 7	Bit 6	Bit 5	Bit 4	Bit 3	Bit 2	Bit 1	Bit 0	Value on: POR, BOR	Value on: MCLR
Bank 18											
CPU CORE REGISTERS; see Table 4-3 for specifics											
90Ch	FVRCON	FVREN	FVRRDY	TSEN	TSRNG	CDAFVR[1:0]		ADFVR[1:0]		0x00 xxxx	0q00 uuuu
90Dh	—	Unimplemented								—	—
90Eh	DAC1CON0	EN	—	OE1	OE2	PSS[1:0]		—	NSS	0-00 00-0	0-00 00-0
90Fh	DAC1CON1	—	—	—	DAC1R[4:0]					---0 0000	---0 0000
910h — 91Eh	—	Unimplemented								—	—
91Fh	ZCDCON	ZCDSEN	—	ZCDOUT	ZCDPOL	—	—	ZCDINTP	ZCDINTN	0-x0 --00	0-x0 --00

Legend: x = unknown, u = unchanged, q = depends on condition, - = unimplemented, read as '0', r = reserved. Shaded locations unimplemented, read as '0'.

© 2017-2021 Microchip Technology Inc.

TABLE 4-10: SPECIAL FUNCTION REGISTER SUMMARY BANKS 0-63 (CONTINUED)

Address	Name	Bit 7	Bit 6	Bit 5	Bit 4	Bit 3	Bit 2	Bit 1	Bit 0	Value on: POR, BOR	Value on: MCLR
Bank 19											
CPU CORE REGISTERS; see Table 4-3 for specifics											
98Ch	—	Unimplemented								—	—
98Dh	—	Unimplemented								—	—
98Eh	—	Unimplemented								—	—
98Fh	CMOUT	—	—	—	—	—	—	MC2OUT	MC1OUT	---- --00	---- --00
990h	CM1CON0	EN	OUT	—	POL	—	—	HYS	SYNC	00-0 --00	00-0 --00
991h	CM1CON1	—	—	—	—	—	—	INTP	INTN	---- --00	---- --00
992h	CM1NCH	—	—	—	—	—	NCH[2:0]			---- -000	---- -000
993h	CM1PCH	—	—	—	—	—	PCH[2:0]			---- -000	---- -000
994h	CM2CON0	EN	OUT	—	POL	—	—	HYS	SYNC	00-0 --00	00-0 --00
995h	CM2CON1	—	—	—	—	—	—	INTP	INTN	---- --00	---- --00
996h	CM2NCH	—	—	—	—	—	NCH[2:0]			---- -000	---- -000
997h	CM2PCH	—	—	—	—	—	PCH[2:0]			---- -000	---- -000
998h — 99Fh	—	Unimplemented								—	—

Legend: x = unknown, u = unchanged, q = depends on condition, - = unimplemented, read as '0', r = reserved. Shaded locations unimplemented, read as '0'.

© 2017-2021 Microchip Technology Inc.

TABLE 4-10: SPECIAL FUNCTION REGISTER SUMMARY BANKS 0-63 (CONTINUED)

Address	Name	Bit 7	Bit 6	Bit 5	Bit 4	Bit 3	Bit 2	Bit 1	Bit 0	Value on: POR, BOR	Value on: MCLR
Bank 20											
CPU CORE REGISTERS; see Table 4-3 for specifics											
A0Ch — A18h	—	Unimplemented								—	—
A19h	RC2REG	RC2REG[7:0]								0000 0000	0000 0000
A1Ah	TX2REG	TX2REG[7:0]								0000 0000	0000 0000
A1Bh	SP2BRGL	SP2BRGL[7:0]								0000 0000	0000 0000
A1Ch	SP2BRGH	SP2BRGH[7:0]								0000 0000	0000 0000
A1Dh	RC2STA	SPEN	RX9	SREN	CREN	ADDEN	FERR	OERR	RX9D	0000 0000	0000 0000
A1Eh	TX2STA	CSRC	TX9	TXEN	SYNC	SENDB	BRGH	TRMT	TX9D	0000 0010	0000 0010
A1Fh	BAUD2CON	ABDOVF	RCIDL	—	SCKP	BRG16	—	WUE	ABDEN	01-0 0-00	01-0 0-00

Legend: x = unknown, u = unchanged, q = depends on condition, - = unimplemented, read as '0', r = reserved. Shaded locations unimplemented, read as '0'.

© 2017-2021 Microchip Technology Inc.

TABLE 4-10: SPECIAL FUNCTION REGISTER SUMMARY BANKS 0-63 (CONTINUED)

Address	Name	Bit 7	Bit 6	Bit 5	Bit 4	Bit 3	Bit 2	Bit 1	Bit 0	Value on: POR, BOR	Value on: MCLR
Bank 21-59											
CPU CORE REGISTERS; see Table 4-3 for specifics											
x0Ch/ x8Ch — x1Fh/ x9Fh	—	Unimplemented								—	—

Legend: x = unknown, u = unchanged, q = depends on condition, - = unimplemented, read as '0', r = reserved. Shaded locations unimplemented, read as '0'.

© 2017-2021 Microchip Technology Inc.

TABLE 4-10: SPECIAL FUNCTION REGISTER SUMMARY BANKS 0-63 (CONTINUED)

Address	Name	Bit 7	Bit 6	Bit 5	Bit 4	Bit 3	Bit 2	Bit 1	Bit 0	Value on: POR, BOR	Value on: MCLR
Bank 60											
CPU CORE REGISTERS; see Table 4-3 for specifics											
1E0Ch	—	Unimplemented								—	—
1E0Dh	—	Unimplemented								—	—
1E0Eh	—	Unimplemented								—	—
1E0Fh	CLCDATA	—	—	—	—	MLC4OUT	MLC3OUT	MLC2OUT	MLC1OUT	---- xxxx	---- uuuu
1E10h	CLCCON	LC1EN	—	LC1OUT	LC1INTP	LC1INTN	LC1MODE[2:0]			0-00 0000	0-00 0000
1E11h	CLC1POL	LC1POL	—	—	—	LC1G4POL	LC1G3POL	LC1G2POL	LC1G1POL	0--- xxxx	0--- uuuu
1E12h	CLC1SEL0	—	—	LC1D1S[5:0]						--xx xxxx	--uu uuuu
1E13h	CLC1SEL1	—	—	LC1D2S[5:0]						--xx xxxx	--uu uuuu
1E14h	CLC1SEL2	—	—	LC1D3S[5:0]						--xx xxxx	--uu uuuu
1E15h	CLC1SEL3	—	—	LC1D4S[5:0]						--xx xxxx	--uu uuuu
1E16h	CLC1GLS0	LC1G1D4T	LC1G1D4N	LC1G1D3T	LC1G1D3N	LC1G1D2T	LC1G1D2N	LC1G1D1T	LC1G1D1N	xxxx xxxx	uuuu uuuu
1E17h	CLC1GLS1	LC1G2D4T	LC1G2D4N	LC1G2D3T	LC1G2D3N	LC1G2D2T	LC1G2D2N	LC1G2D1T	LC1G2D1N	xxxx xxxx	uuuu uuuu
1E18h	CLC1GLS2	LC1G3D4T	LC1G3D4N	LC1G3D3T	LC1G3D3N	LC1G3D2T	LC1G3D2N	LC1G3D1T	LC1G3D1N	xxxx xxxx	uuuu uuuu
1E19h	CLC1GLS3	LC1G4D4T	LC1G4D4N	LC1G4D3T	LC1G4D3N	LC1G4D2T	LC1G4D2N	LC1G4D1T	LC1G4D1N	xxxx xxxx	uuuu uuuu
1E1Ah	CLC2CON	LC2EN	—	LC2OUT	LC2INTP	LC2INTN	LC2MODE[2:0]			0-00 0000	0-00 0000
1E1Bh	CLC2POL	LC2POL	—	—	—	LC2G4POL	LC2G3POL	LC2G2POL	LC2G1POL	0--- xxxx	0--- uuuu
1E1Ch	CLC2SEL0	—	—	LC2D1S[5:0]						--xx xxxx	--uu uuuu
1E1Dh	CLC2SEL1	—	—	LC2D2S[5:0]						--xx xxxx	--uu uuuu
1E1Eh	CLC2SEL2	—	—	LC2D3S[5:0]						--xx xxxx	--uu uuuu
1E1Fh	CLC2SEL3	—	—	LC2D4S[5:0]						--xx xxxx	--uu uuuu
1E20h	CLC2GLS0	LC2G1D4T	LC2G1D4N	LC2G1D3T	LC2G1D3N	LC2G1D2T	LC2G1D2N	LC2G1D1T	LC2G1D1N	xxxx xxxx	uuuu uuuu
1E21h	CLC2GLS1	LC2G2D4T	LC2G2D4N	LC2G2D3T	LC2G2D3N	LC2G2D2T	LC2G2D2N	LC2G2D1T	LC2G2D1N	xxxx xxxx	uuuu uuuu
1E22h	CLC2GLS2	LC2G3D4T	LC2G3D4N	LC2G3D3T	LC2G3D3N	LC2G3D2T	LC2G3D2N	LC2G3D1T	LC2G3D1N	xxxx xxxx	uuuu uuuu
1E23h	CLC2GLS3	LC2G4D4T	LC2G4D4N	LC2G4D3T	LC2G4D3N	LC2G4D2T	LC2G4D2N	LC2G4D1T	LC2G4D1N	xxxx xxxx	uuuu uuuu
1E24h	CLC3CON	LC3EN	—	LC3OUT	LC3INTP	LC3INTN	LC3MODE			0-00 0000	0-00 0000
1E25h	CLC3POL	LC3POL	—	—	—	LC3G4POL	LC3G3POL	LC3G2POL	LC3G1POL	0--- xxxx	0--- uuuu
1E26h	CLC3SEL0	—	—	LC3D1S[5:0]						--xx xxxx	--uu uuuu
1E27h	CLC3SEL1	—	—	LC3D2S[5:0]						--xx xxxx	--uu uuuu
1E28h	CLC3SEL2	—	—	LC3D3S[5:0]						--xx xxxx	--uu uuuu
1E29h	CLC3SEL3	—	—	LC3D4S[5:0]						--xx xxxx	--uu uuuu
1E2Ah	CLC3GLS0	LC3G1D4T	LC3G1D4N	LC3G1D3T	LC3G1D3N	LC3G1D2T	LC3G1D2N	LC3G1D1T	LC3G1D1N	xxxx xxxx	uuuu uuuu

Legend: x = unknown, u = unchanged, q = depends on condition, - = unimplemented, read as '0', r = reserved. Shaded locations unimplemented, read as '0'.

© 2017-2021 Microchip Technology Inc.

TABLE 4-10: SPECIAL FUNCTION REGISTER SUMMARY BANKS 0-63 (CONTINUED)

Address	Name	Bit 7	Bit 6	Bit 5	Bit 4	Bit 3	Bit 2	Bit 1	Bit 0	Value on: POR, BOR	Value on: MCLR
Bank 60 (Continued)											
1E2Bh	CLC3GLS1	LC3G2D4T	LC3G2D4N	LC3G2D3T	LC3G2D3N	LC3G2D2T	LC3G2D2N	LC3G2D1T	LC3G2D1N	xxxx xxxx	uuuu uuuu
1E2Ch	CLC3GLS2	LC3G3D4T	LC3G3D4N	LC3G3D3T	LC3G3D3N	LC3G3D2T	LC3G3D2N	LC3G3D1T	LC3G3D1N	xxxx xxxx	uuuu uuuu
1E2Dh	CLC3GLS3	LC3G4D4T	LC3G4D4N	LC3G4D3T	LC3G4D3N	LC3G4D2T	LC3G4D2N	LC3G4D1T	LC3G4D1N	xxxx xxxx	uuuu uuuu
1E2Eh	CLC4CON	LC4EN	—	LC4OUT	LC4INTP	LC4INTN	LC4MODE[2:0]			0-00 0000	0-00 0000
1E2Fh	CLC4POL	LC4POL	—	—	—	LC4G4POL	LC4G3POL	LC4G2POL	LC4G1POL	0--- xxxx	0--- uuuu
1E30h	CLC4SEL0	—	—	LC4D1S[5:0]						--xx xxxx	--uu uuuu
1E31h	CLC4SEL1	—	—	LC4D2S[5:0]						--xx xxxx	--uu uuuu
1E32h	CLC4SEL2	—	—	LC4D3S[5:0]						--xx xxxx	--uu uuuu
1E33h	CLC4SEL3	—	—	LC4D4S[5:0]						--xx xxxx	--uu uuuu
1E34h	CLC4GLS0	LC4G1D4T	LC4G1D4N	LC4G1D3T	LC4G1D3N	LC4G1D2T	LC4G1D2N	LC4G1D1T	LC4G1D1N	xxxx xxxx	uuuu uuuu
1E35h	CLC4GLS1	LC4G2D4T	LC4G2D4N	LC4G2D3T	LC4G2D3N	LC4G2D2T	LC4G2D2N	LC4G2D1T	LC4G2D1N	xxxx xxxx	uuuu uuuu
1E36h	CLC4GLS2	LC4G3D4T	LC4G3D4N	LC4G3D3T	LC4G3D3N	LC4G3D2T	LC4G3D2N	LC4G3D1T	LC4G3D1N	xxxx xxxx	uuuu uuuu
1E37h	CLC4GLS3	LC4G4D4T	LC4G4D4N	LC4G4D3T	LC4G4D3N	LC4G4D2T	LC4G4D2N	LC4G4D1T	LC4G4D1N	xxxx xxxx	uuuu uuuu
1E38h — 1E6Fh	—	Unimplemented								—	—

Legend: x = unknown, u = unchanged, q = depends on condition, - = unimplemented, read as '0', r = reserved. Shaded locations unimplemented, read as '0'.

© 2017-2021 Microchip Technology Inc.

TABLE 4-10: SPECIAL FUNCTION REGISTER SUMMARY BANKS 0-63 (CONTINUED)

Address	Name	Bit 7	Bit 6	Bit 5	Bit 4	Bit 3	Bit 2	Bit 1	Bit 0	Value on: POR, BOR	Value on: MCLR
Bank 61											
CPU CORE REGISTERS; see Table 4-3 for specifics											
1E8Ch	—	Unimplemented								—	—
1E8Dh	—	Unimplemented								—	—
1E8Eh	—	Unimplemented								—	—
1E8Fh	PPSLOCK	—	—	—	—	—	—	—	PPSLOCKED	---- ---0	---- ---0
1E90h	INTPPS	—	—	INTPPS[5:0]						--00 1000	--uu uuuu
1E91h	T0CKIPPS	—	—	T0CKIPPS[5:0]						--00 0100	--uu uuuu
1E92h	T1CKIPPS	—	—	T1CKIPPS[5:0]						--01 0000	--uu uuuu
1E93h	T1GPPS	—	—	T1GPPS[5:0]						--00 1101	--uu uuuu
1E94h — 1E9Bh	—	Unimplemented								—	—
1E9Ch	T2INPPS	—	—	T2INPPS[5:0]						--01 0011	--uu uuuu
1E9Dh — 1EA0h	—	Unimplemented								—	—
1EA1h	CCP1PPS	—	—	CCP1PPS[5:0]						--01 0010	--uu uuuu
1EA2h	CCP2PPS	—	—	CCP2PPS[5:0]						--01 0001	--uu uuuu
1EA3h — 1EB0h	—	Unimplemented								—	—
1EB1h	CWG1PPS	—	—	CWG1PPS[5:0]						--00 1000	--uu uuuu
1EB2h — 1EBAh	—	Unimplemented								—	—
1EBBh	CLCIN0PPS	—	—	CLCIN0PPS[5:0]						--00 0000	--uu uuuu
1EBCh	CLCIN1PPS	—	—	CLCIN1PPS[5:0]						--00 0001	--uu uuuu
1EBDh	CLCIN2PPS	—	—	CLCIN2PPS[5:0]						--00 1110	--uu uuuu
1EBEh	CLCIN3PPS	—	—	CLCIN3PPS[5:0]						--00 1111	--uu uuuu
1EBFh — 1EC2h	—	Unimplemented								—	—
1EC3h	ADACTPPS	—	—	CLCIN3PPS[5:0]						--001100	--uuuuuu
1EC4h	—	Unimplemented								—	—

Legend: x = unknown, u = unchanged, q = depends on condition, - = unimplemented, read as '0', r = reserved. Shaded locations unimplemented, read as '0'.

© 2017-2021 Microchip Technology Inc.

TABLE 4-10: SPECIAL FUNCTION REGISTER SUMMARY BANKS 0-63 (CONTINUED)

Address	Name	Bit 7	Bit 6	Bit 5	Bit 4	Bit 3	Bit 2	Bit 1	Bit 0	Value on: POR, BOR	Value on: MCLR
Bank 61 (Continued)											
1EC5h	SSP1CLKPPS	—	—	SSP1CLKPPS[5:0]						--01 0011	--uu uuuu
1EC6h	SSP1DATPPS	—	—	SSP1DATPPS[5:0]						--01 0100	--uu uuuu
1EC7h	SSP1SSPPS	—	—	SSP1SSPPS[5:0]						--00 0101	--uu uuuu
1ECBh	RX1DTPPS	—	—	RX1DTPPS[5:0]						--01 0111	--uu uuuu
1ECCh	TX1CKPPS	—	—	TX1CKPPS[5:0]						--01 0110	--uu uuuu
1ECDh	RX2DTPPS	—	—	RX2DTPPS[5:0]						--00 1111	--uu uuuu
1ECEh	TX2CKPPS	—	—	TX2CKPPS[5:0]						--00 1110	--uu uuuu
1ECFh — 1EEFh	—	Unimplemented								—	—

Legend: x = unknown, u = unchanged, q = depends on condition, - = unimplemented, read as '0', r = reserved. Shaded locations unimplemented, read as '0'.

© 2017-2021 Microchip Technology Inc.

TABLE 4-10: SPECIAL FUNCTION REGISTER SUMMARY BANKS 0-63 (CONTINUED)

Address	Name	Bit 7	Bit 6	Bit 5	Bit 4	Bit 3	Bit 2	Bit 1	Bit 0	Value on: POR, BOR	Value on: MCLR
Bank 62											
CPU CORE REGISTERS; see Table 4-3 for specifics											
1F0Ch	—	Unimplemented								—	—
1F0Dh	—	Unimplemented								—	—
1F0Eh	—	Unimplemented								—	—
1F0Fh	—	Unimplemented								—	—
1F10h	RA0PPS	—	—	—	RA0PPS[4:0]					---0 0000	---u uuuu
1F11h	RA1PPS	—	—	—	RA1PPS[4:0]					---0 0000	---u uuuu
1F12h	RA2PPS	—	—	—	RA2PPS[4:0]					---0 0000	---u uuuu
1F13h	RA3PPS	—	—	—	RA3PPS[4:0]					---0 0000	---u uuuu
1F14h	RA4PPS	—	—	—	RA4PPS[4:0]					---0 0000	---u uuuu
1F15h	RA5PPS	—	—	—	RA5PPS[4:0]					---0 0000	---u uuuu
1F16h — 1F1Bh	—	Unimplemented								—	—
1F1Ch	RB4PPS(1)	—	—	—	RB4PPS[4:0]					---0 0000	---u uuuu
1F1Dh	RB5PPS(1)	—	—	—	RB5PPS[4:0]					---0 0000	---u uuuu
1F1Eh	RB6PPS(1)	—	—	—	RB6PPS[4:0]					---0 0000	---u uuuu
1F1Fh	RB7PPS(1)	—	—	—	RB7PPS[4:0]					---0 0000	---u uuuu
1F20h	RC0PPS	—	—	—	RC0PPS[4:0]					---0 0000	---u uuuu
1F21h	RC1PPS	—	—	—	RC1PPS[4:0]					---0 0000	---u uuuu
1F22h	RC2PPS	—	—	—	RC2PPS[4:0]					---0 0000	---u uuuu
1F23h	RC3PPS	—	—	—	RC3PPS[4:0]					---0 0000	---u uuuu
1F24h	RC4PPS	—	—	—	RC4PPS[4:0]					---0 0000	---u uuuu
1F25h	RC5PPS	—	—	—	RC5PPS[4:0]					---0 0000	---u uuuu
1F26h	RC6PPS(1)	—	—	—	RC6PPS[4:0]					---0 0000	---u uuuu
1F27h	RC7PPS(1)	—	—	—	RC7PPS[4:0]					---0 0000	---u uuuu
1F28h — 1F37h	—	Unimplemented								—	—

Legend: x = unknown, u = unchanged, q = depends on condition, - = unimplemented, read as '0', r = reserved. Shaded locations unimplemented, read as '0'.
Note 1: Present only in PIC16(L)F15344.

© 2017-2021 Microchip Technology Inc.

TABLE 4-10: SPECIAL FUNCTION REGISTER SUMMARY BANKS 0-63 (CONTINUED)

Address	Name	Bit 7	Bit 6	Bit 5	Bit 4	Bit 3	Bit 2	Bit 1	Bit 0	Value on: POR, BOR	Value on: MCLR
Bank 62 (Continued)											
1F38h	ANSELA	—	—	ANSA5	ANSA4	—	ANSA2	ANSA1	ANSA0	--11 1111	--11 1111
1F39h	WPUA	—	—	WPUA5	WPUA4	WPUA3	WPUA2	WPUA1	WPUA0	--00 0000	--00 0000
1F3Ah	ODCONA	—	—	ODCA5	ODCA4	—	ODCA2	ODCA1	ODCA0	--00 0000	--00 0000
1F3Bh	SLRCONA	—	—	SLRA5	SLRA4	—	SLRA2	SLRA1	SLRA0	--11 1111	--11 1111
1F3Ch	INLVLA	—	—	INLVLA5	INLVLA4	INLVLA3	INLVLA2	INLVLA1	INLVLA0	--11 1111	--11 1111
1F3Dh	IOCAP	—	—	IOCAP5	IOCAP4	IOCAP3	IOCAP2	IOCAP1	IOCAP0	--00 0000	--00 0000
1F3Eh	IOCAN	—	—	IOCAN5	IOCAN4	IOCAN3	IOCAN2	IOCAN1	IOCAN0	--00 0000	--00 0000
1F3Fh	IOCAF	—	—	IOCAF5	IOCAF4	IOCAF3	IOCAF2	IOCAF1	IOCAF0	--00 0000	--00 0000
1F40h — 1F42h	—	Unimplemented								—	—
1F43h	ANSELB(1)	ANSB7	ANSB6	ANSB5	ANSB4	—	—	—	—	1111 ----	1111 ----
1F44h	WPUB(1)	WPUB7	WPUB6	WPUB5	WPUB4	—	—	—	—	0000 ----	0000 ----
1F45h	ODCONB(1)	ODCB7	ODCB6	ODCB5	ODCB4	—	—	—	—	0000 ----	0000 ----
1F46h	SLRCONB(1)	SLRB7	SLRB6	SLRB5	SLRB4	—	—	—	—	1111 ----	1111 ----
1F47h	INLVLB(1)	INLVLB7	INLVLB6	INLVLB5	INLVLB4	—	—	—	—	1111 ----	1111 ----
1F48h	IOCBP(1)	IOCBP7	IOCBP6	IOCBP5	IOCBP4	—	—	—	—	0000 ----	0000 ----
1F49h	IOCBN(1)	IOCBN7	IOCBN6	IOCBN5	IOCBN4	—	—	—	—	0000 ----	0000 ----
1F4Ah	IOCBF(1)	IOCBF7	IOCBF6	IOCBF5	IOCBF4	—	—	—	—	0000 ----	0000 ----
1F4Bh — 1F4Dh	—	Unimplemented								—	—
1F4Eh	ANSELC	ANSC7(1)	ANSC6(1)	ANSC5	ANSC4	ANSC3	ANSC2	ANSC1	ANSC0	1111 1111	1111 1111
1F4Fh	WPUC	WPUC7(1)	WPUC6(1)	WPUC5	WPUC4	WPUC3	WPUC2	WPUC1	WPUC0	0000 0000	0000 0000
1F50h	ODCONC	ODCC7(1)	ODCC6(1)	ODCC5	ODCC4	ODCC3	ODCC2	ODCC1	ODCC0	0000 0000	0000 0000
1F51h	SLRCONC	SLRC7(1)	SLRC6(1)	SLRC5	SLRC4	SLRC3	SLRC2	SLRC1	SLRC0	1111 1111	1111 1111
1F52h	INLVLC	INLVLC7(1)	INLVLC6(1)	INLVLC5	INLVLC4	INLVLC3	INLVLC2	INLVLC1	INLVLC0	1111 1111	1111 1111
1F53h	IOCCP	IOCCP7(1)	IOCCP6(1)	IOCCP5	IOCCP4	IOCCP3	IOCCP2	IOCCP1	IOCCP0	0000 0000	0000 0000
1F54h	IOCCN	IOCCN7(1)	IOCCN6(1)	IOCCN5	IOCCN4	IOCCN3	IOCCN2	IOCCN1	IOCCN0	0000 0000	0000 0000
1F55h	IOCCF	IOCCF7(1)	IOCCF6(1)	IOCCF5	IOCCF4	IOCCF3	IOCCF2	IOCCF1	IOCCF0	0000 0000	0000 0000
1F56h — 1F6Fh	—	Unimplemented								—	—

Legend: x = unknown, u = unchanged, q = depends on condition, - = unimplemented, read as '0', r = reserved. Shaded locations unimplemented, read as '0'.

Note 1: Present only in PIC16(L)F15344.

© 2017-2021 Microchip Technology Inc.

TABLE 4-10: SPECIAL FUNCTION REGISTER SUMMARY BANKS 0-63 (CONTINUED)

Address	Name	Bit 7	Bit 6	Bit 5	Bit 4	Bit 3	Bit 2	Bit 1	Bit 0	Value on: POR, BOR	Value on: MCLR
Bank 63											
CPU CORE REGISTERS; see Table 4-3 for specifics											
1F8Ch — 1FE3h	—	Unimplemented								—	—
1FE4h	STATUS_SHAD	—	—	—	—	—	Z	DC	C	---- -xxx	---- -uuu
1FE5h	WREG_SHAD	Working Register Shadow								xxxx xxxx	uuuu uuuu
1FE6h	BSR_SHAD	—	—	—	Bank Select Register Shadow					---x xxxx	---u uuuu
1FE7h	PCLATH_SHAD	—	Program Counter Latch High Register Shadow							-xxx xxxx	uuuu uuuu
1FE8h	FSR0L_SHAD	Indirect Data Memory Address 0 Low Pointer Shadow								xxxx xxxx	uuuu uuuu
1FE9h	FSR0H_SHAD	Indirect Data Memory Address 0 High Pointer Shadow								xxxx xxxx	uuuu uuuu
1FEAh	FSR1L_SHAD	Indirect Data Memory Address 1 Low Pointer Shadow								xxxx xxxx	uuuu uuuu
1FEBh	FSR1H_SHAD	Indirect Data Memory Address 1 High Pointer Shadow								xxxx xxxx	uuuu uuuu
1FECh	—	Unimplemented								—	—
1FEDh	STKPTR	—	—	—	Current Stack Pointer					---1 1111	---1 1111
1FEEh	TOSL	Top of Stack Low byte								xxxx xxxx	uuuu uuuu
1FEFh	TOSH	—	Top of Stack High byte							-xxx xxxx	-uuu uuuu

Legend: x = unknown, u = unchanged, q = depends on condition, - = unimplemented, read as '0', r = reserved. Shaded locations unimplemented, read as '0'.

© 2017-2021 Microchip Technology Inc.

4.4 PCL and PCLATH

The Program Counter (PC) is 15 bits wide. The low byte comes from the PCL register, which is a readable and writable register. The high byte (PC[14:8]) is not directly readable or writable and comes from PCLATH. On any Reset, the PC is cleared. Figure 4-3 shows the five situations for the loading of the PC.

FIGURE 4-3: LOADING OF PC IN DIFFERENT SITUATIONS

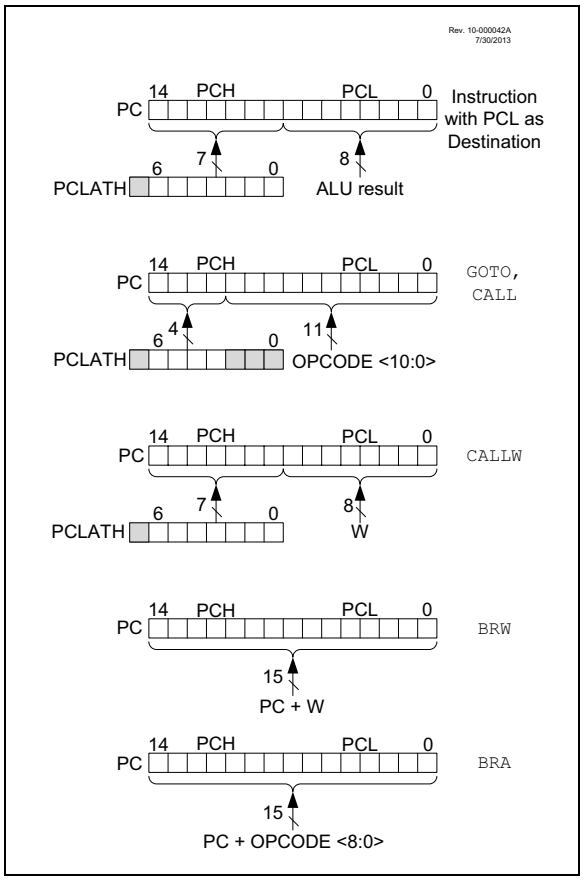

4.4.1 MODIFYING PCL

Executing any instruction with the PCL register as the destination simultaneously causes the Program Counter PC[14:8] bits (PCH) to be replaced by the contents of the PCLATH register. This allows the entire contents of the program counter to be changed by writing the desired upper seven bits to the PCLATH register. When the lower eight bits are written to the PCL register, all 15 bits of the program counter will change to the values contained in the PCLATH register and those being written to the PCL register.

4.4.2 COMPUTED `GOTO`

A computed `GOTO` is accomplished by adding an offset to the program counter (`ADDWF PCL`). When performing a table read using a computed `GOTO` method, care must be exercised if the table location crosses a PCL memory boundary (each 256-byte block). Refer to Application Note AN556, *"Implementing a Table Read"* (DS00556).

4.4.3 COMPUTED FUNCTION CALLS

A computed function `CALL` allows programs to maintain tables of functions and provide another way to execute state machines or look-up tables. When performing a table read using a computed function `CALL`, care must be exercised if the table location crosses a PCL memory boundary (each 256-byte block).

If using the `CALL` instruction, the PCH[2:0] and PCL registers are loaded with the operand of the `CALL` instruction. PCH[6:3] is loaded with PCLATH[6:3].

The `CALLW` instruction enables computed calls by combining PCLATH and W to form the destination address. A computed `CALLW` is accomplished by loading the W register with the desired address and executing `CALLW`. The PCL register is loaded with the value of W and PCH is loaded with PCLATH.

4.4.4 BRANCHING

The branching instructions add an offset to the PC. This allows relocatable code and code that crosses page boundaries. There are two forms of branching, `BRW` and `BRA`. The PC will have incremented to fetch the next instruction in both cases. When using either branching instruction, a PCL memory boundary may be crossed.

If using `BRW`, load the W register with the desired unsigned address and execute `BRW`. The entire PC will be loaded with the address PC + 1 + W.

If using BRA, the entire PC will be loaded with PC + 1 + the signed value of the operand of the BRA instruction.

4.5 Stack

All devices have a 16-level x 15-bit wide hardware stack (refer to Figure 4-4 through Figure 4-7). The stack space is not part of either program or data space. The PC is PUSHed onto the stack when `CALL` or `CALLW` instructions are executed or an interrupt causes a branch. The stack is POPed in the event of a `RETURN`, `RETLW` or a `RETFIE` instruction execution. PCLATH is not affected by a PUSH or POP operation.

The stack operates as a circular buffer if the STVREN bit is programmed to '`0`' (Configuration Words). This means that after the stack has been PUSHed sixteen times, the seventeenth PUSH overwrites the value that was stored from the first PUSH. The eighteenth PUSH overwrites the second PUSH (and so on). The STKOVF and STKUNF flag bits will be set on an Overflow/Underflow, regardless of whether the Reset is enabled.

Note 1:	There are no instructions/mnemonics called PUSH or POP. These are actions that occur from the execution of the `CALL`, `CALLW`, `RETURN`, `RETLW` and `RETFIE` instructions or the vectoring to an interrupt address.

4.5.1 ACCESSING THE STACK

The stack is accessible through the TOSH, TOSL and STKPTR registers. STKPTR is the current value of the Stack Pointer. TOSH:TOSL register pair points to the TOP of the stack. Both registers are read/writable. TOS is split into TOSH and TOSL due to the 15-bit size of the PC. To access the stack, adjust the value of STKPTR, which will position TOSH:TOSL, then read/write to TOSH:TOSL. STKPTR is five bits to allow detection of overflow and underflow.

Note:	Care must be taken when modifying the STKPTR while interrupts are enabled.

During normal program operation, `CALL`, `CALLW` and interrupts will increment STKPTR while `RETLW`, `RETURN`, and `RETFIE` will decrement STKPTR. STKPTR can be monitored to obtain to value of stack memory left at any given time. The STKPTR always points at the currently used place on the stack. Therefore, a `CALL` or `CALLW` will increment the STKPTR and then write the PC, and a return will unload the PC value from the stack and then decrement the STKPTR.

Reference Figure 4-4 through Figure 4-7 for examples of accessing the stack.

FIGURE 4-4: ACCESSING THE STACK EXAMPLE 1

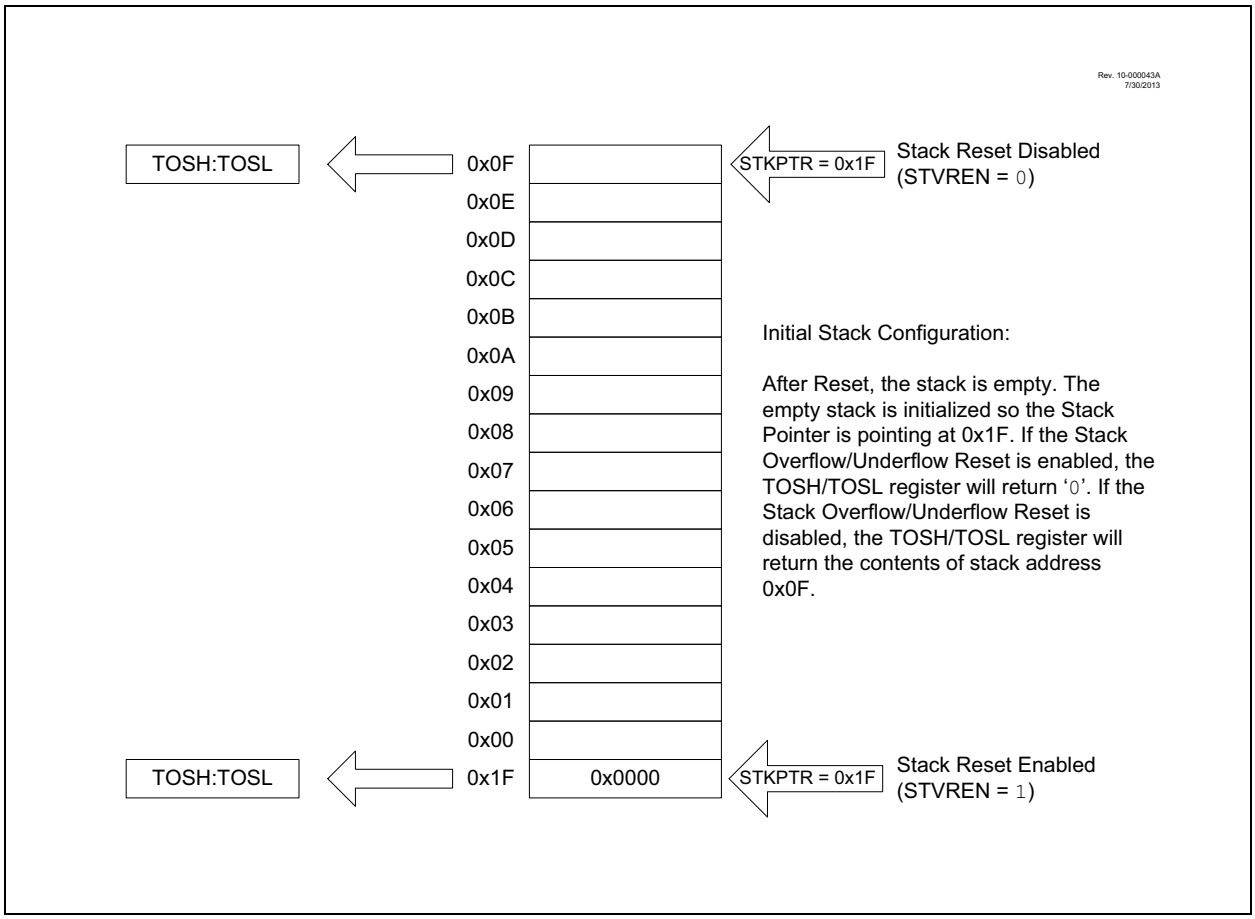

FIGURE 4-5: ACCESSING THE STACK EXAMPLE 2

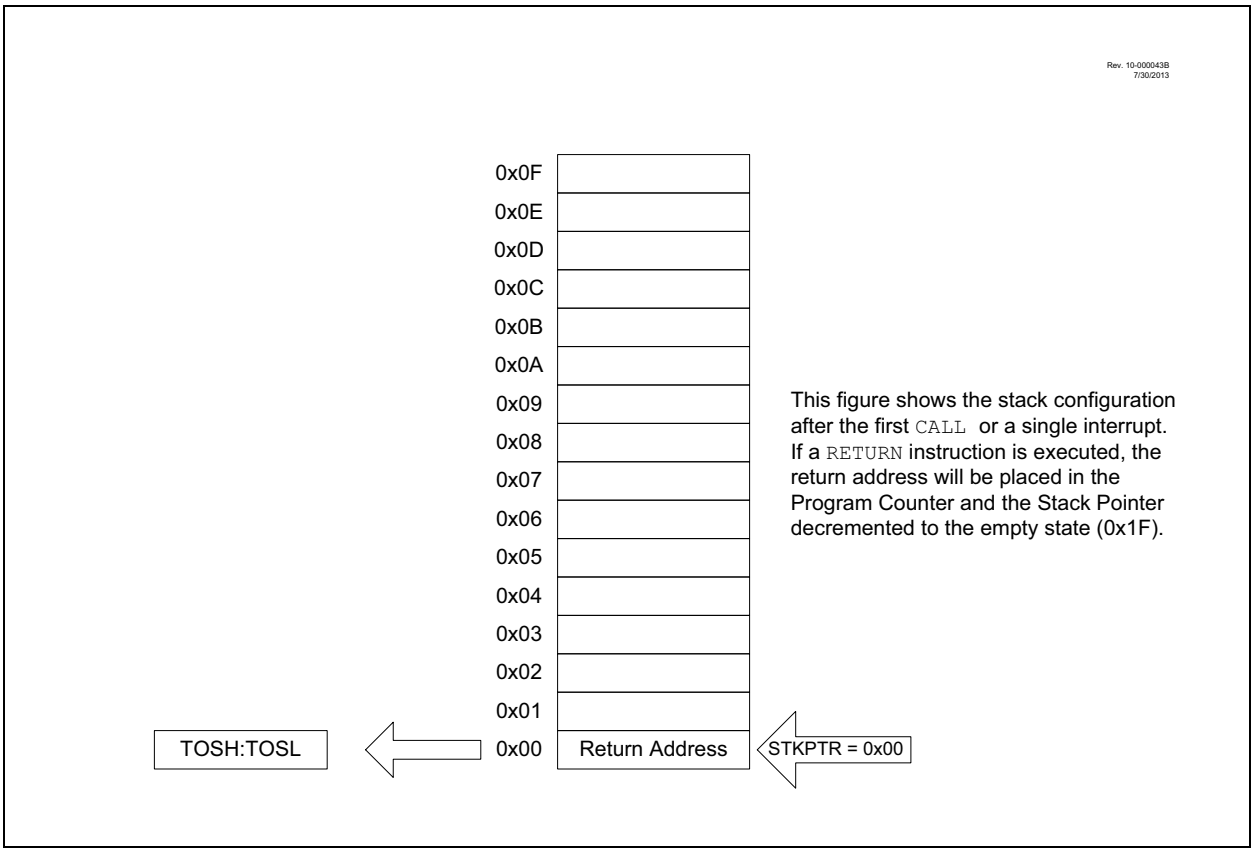

FIGURE 4-6: ACCESSING THE STACK EXAMPLE 3

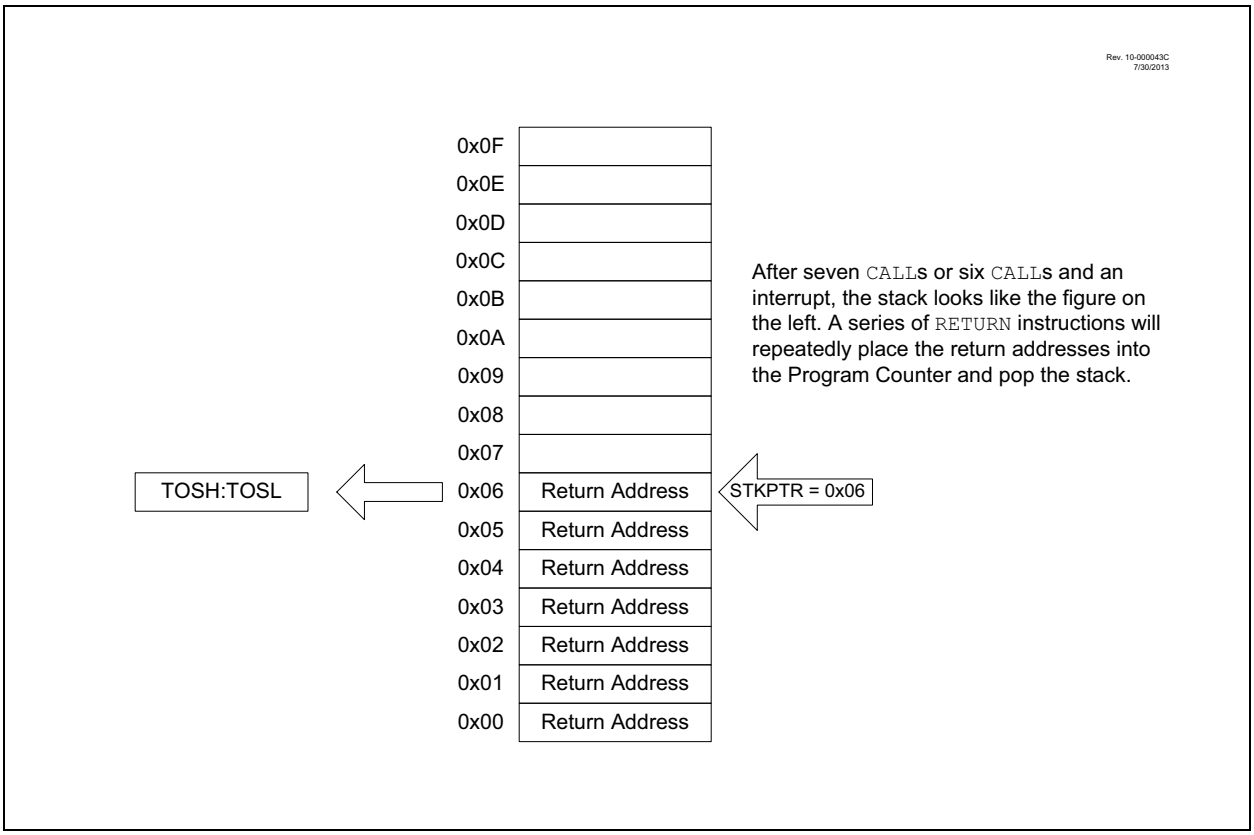

FIGURE 4-7: ACCESSING THE STACK EXAMPLE 4

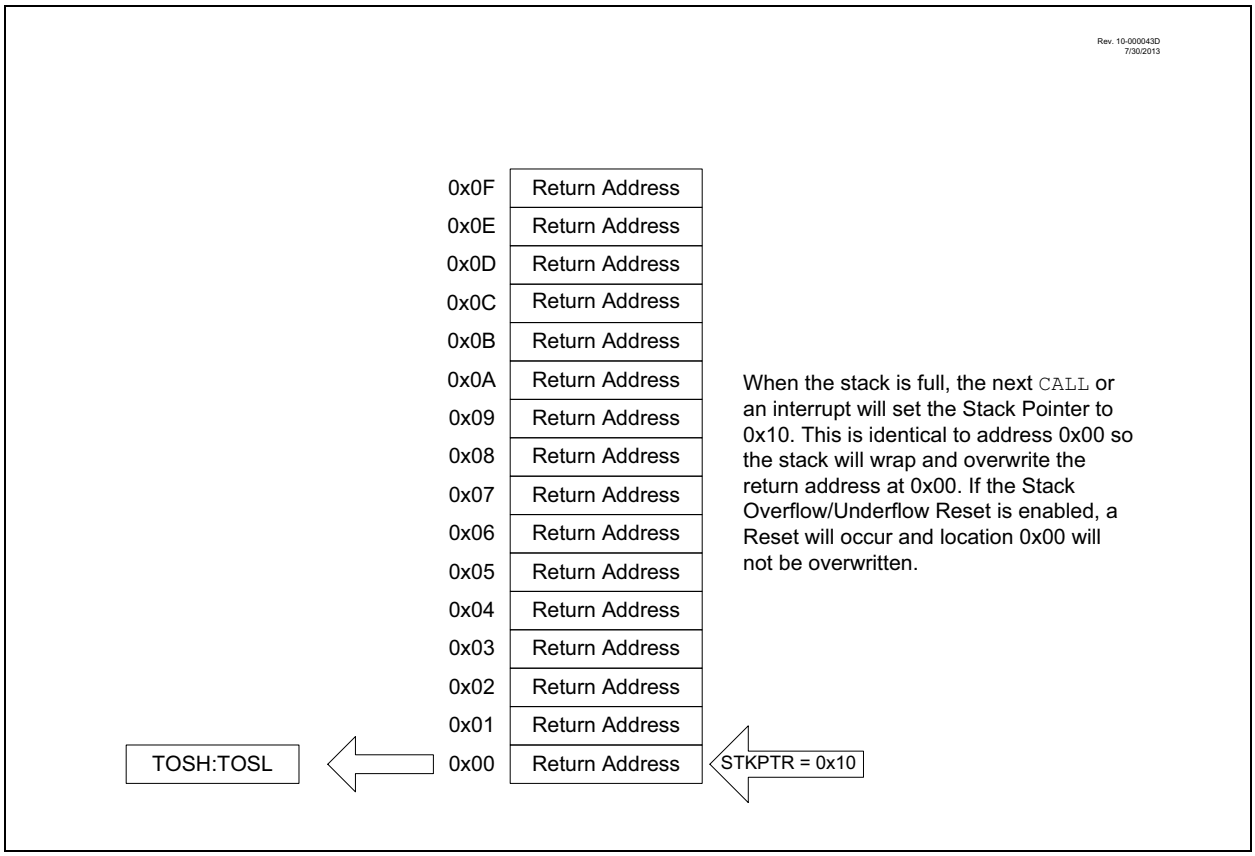

4.5.2 OVERFLOW/UNDERFLOW RESET

If the STVREN bit in Configuration Words (Register 5-2) is programmed to '1', the device will be Reset if the stack is PUSHed beyond the sixteenth level or POPed beyond the first level, setting the appropriate bits (STKOVF or STKUNF, respectively) in the PCON register.

4.6 Indirect Addressing

The INDFn registers are not physical registers. Any instruction that accesses an INDFn register actually accesses the register at the address specified by the File Select Registers (FSR). If the FSRn address specifies one of the two INDFn registers, the read will return '0' and the write will not occur (though Status bits may be affected). The FSRn register value is created by the pair FSRnH and FSRnL.

The FSR registers form a 16-bit address that allows an addressing space with 65536 locations. These locations are divided into three memory regions:

- Traditional/Banked Data Memory
- Linear Data Memory
- Program Flash Memory

FIGURE 4-8: INDIRECT ADDRESSING PIC16(L)F15324/44

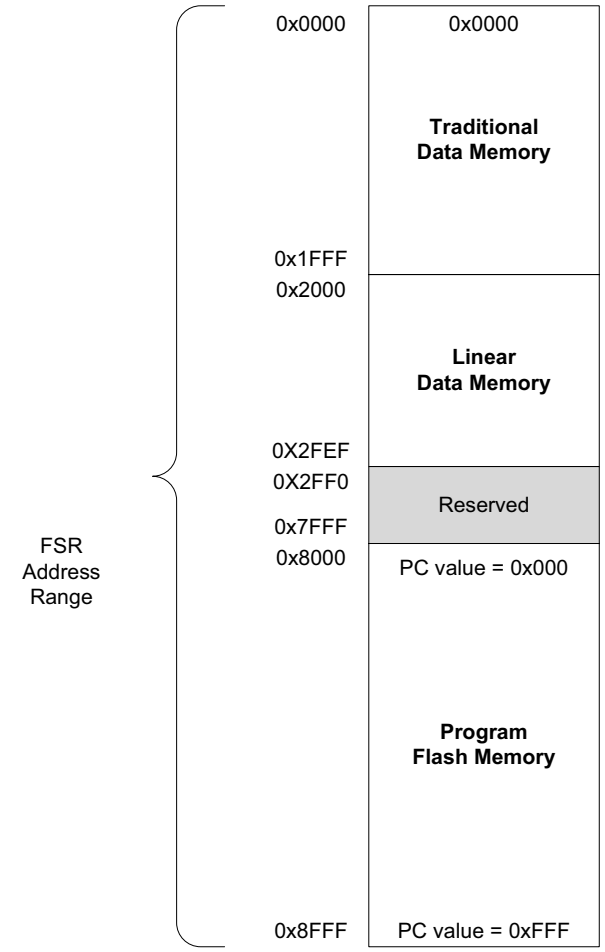

4.6.1 TRADITIONAL/BANKED DATA MEMORY

The traditional or banked data memory is a region from FSR address 0x000 to FSR address 0x1FFF. The addresses correspond to the absolute addresses of all SFR, GPR and common registers.

FIGURE 4-9: TRADITIONAL/BANKED DATA MEMORY MAP

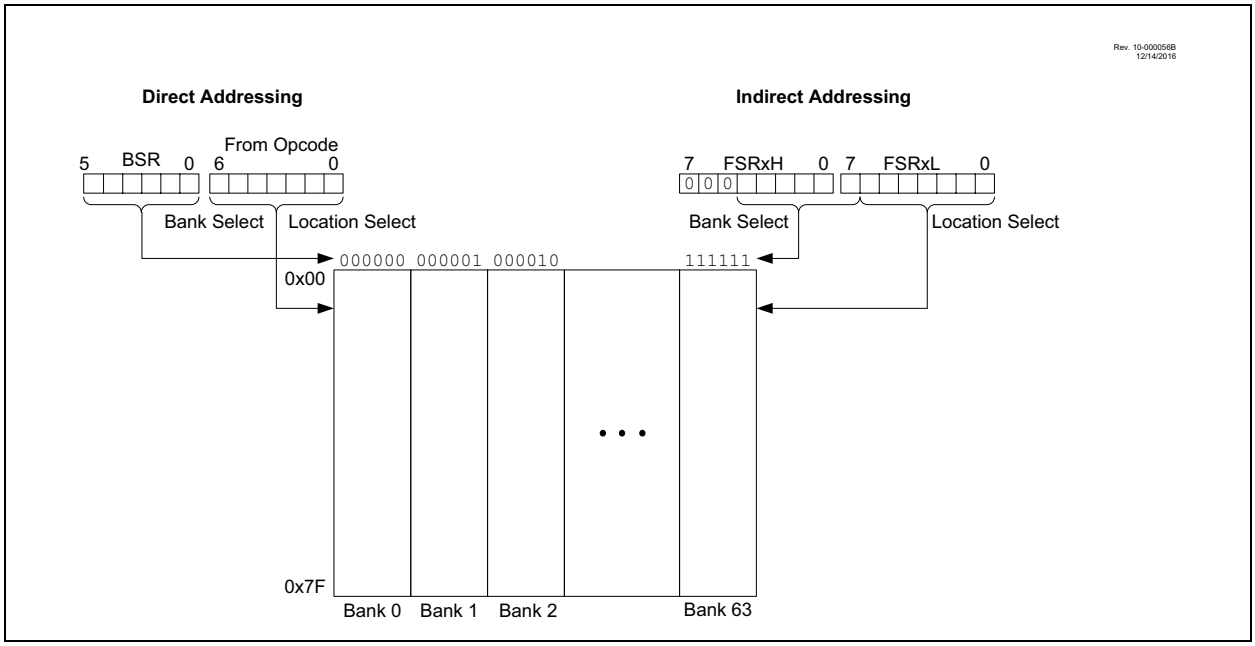

4.6.2 LINEAR DATA MEMORY

The linear data memory is the region from FSR address 0x2000 to FSR address 0X2FEF. This region is a virtual region that points back to the 80-byte blocks of GPR memory in all the banks. Refer to Figure 4-10 for the Linear Data Memory Map.

> **Note:** The address range 0x2000 to 0x2FF0 represents the complete addressable Linear Data Memory up to Bank 50. The actual implemented Linear Data Memory will differ from one device to the other in a family. Confirm the memory limits on every device.

Unimplemented memory reads as `0x00`. Use of the linear data memory region allows buffers to be larger than 80 bytes because incrementing the FSR beyond one bank will go directly to the GPR memory of the next bank.

The 16 bytes of common memory are not included in the linear data memory region.

FIGURE 4-10: LINEAR DATA MEMORY MAP

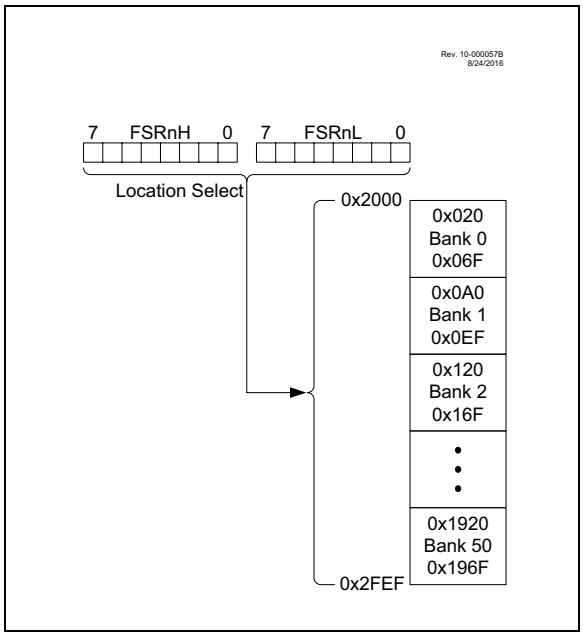

4.6.3 PROGRAM FLASH MEMORY

To make constant data access easier, the entire Program Flash Memory is mapped to the upper half of the FSR address space. When the MSB of FSRnH is set, the lower 15 bits are the address in program memory which will be accessed through INDF. Only the lower eight bits of each memory location is accessible via INDF. Writing to the Program Flash Memory cannot be accomplished via the FSR/INDF interface. All instructions that access Program Flash Memory via the FSR/INDF interface will require one additional instruction cycle to complete.

FIGURE 4-11: PROGRAM FLASH MEMORY MAP

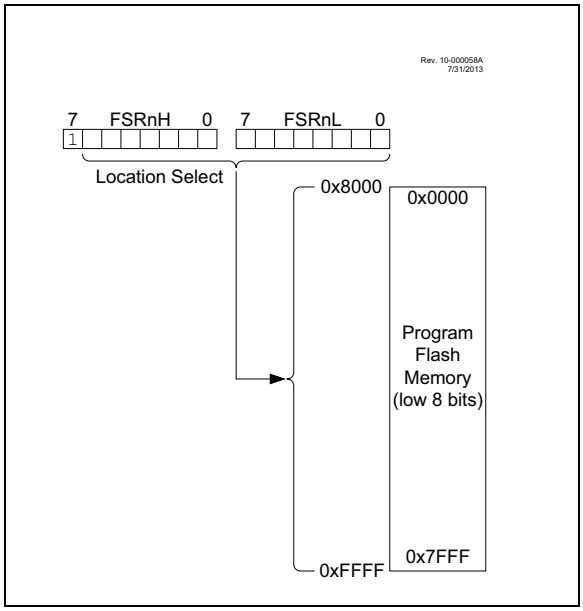

5.0 DEVICE CONFIGURATION

Device configuration consists of the Configuration Words, User ID, Device ID, Device Information Area (DIA), (see **Section 6.0 "Device Information Area"**), and the Device Configuration Information (DCI) regions, (see **Section 7.0 "Device Configuration Information"**).

5.1 Configuration Words

The devices have several Configuration Words starting at address 8007h. The Configuration bits establish configuration values prior to the execution of any software; Configuration bits enable or disable device-specific features.

In terms of programming, consider these important Configuration bits:

1. LVP: Low-Voltage Programming Enable bit

- 1 = ON – Low-Voltage Programming is enabled. $\overline{\text{MCLR}}$/VPP pin function is $\overline{\text{MCLR}}$. MCLRE Configuration bit is ignored.
- 0 = OFF – HV on $\overline{\text{MCLR}}$/VPP must be used for programming.

2. $\overline{\text{CP}}$: User Nonvolatile Memory (NVM) Program Memory Code Protection bit

- 1 = OFF – User NVM code protection disabled
- 0 = ON – User NVM code protection enabled

5.2 Register Definitions: Configuration Words

REGISTER 5-1: CONFIGURATION WORD 1: OSCILLATORS

R/P-1	U-1	R/P-1	U-1	U-1	R/P-1
FCMEN	—	CSWEN	—	—	$\overline{\text{CLKOUTEN}}$
bit 13					bit 8

U-1	R/P-1	R/P-1	R/P-1	U-1	R/P-1	R/P-1	R/P-1
—	RSTOSC2	RSTOSC1	RSTOSC0	—	FEXTOSC2	FEXTOSC1	FEXTOSC0
bit 7							bit 0

Legend:			
R = Readable bit	P = Programmable bit	x = Bit is unknown	U = Unimplemented bit, read as ‘1’
‘0’ = Bit is cleared	‘1’ = Bit is set	W = Writable bit	n = Value when blank or after Bulk Erase

bit 13 **FCMEN**: Fail-Safe Clock Monitor Enable bit
1 = FSCM timer enabled
0 = FSCM timer disabled

bit 12 **Unimplemented**: Read as ‘1’

bit 11 **CSWEN**: Clock Switch Enable bit
1 = Writing to NOSC and NDIV is allowed
0 = The NOSC and NDIV bits cannot be changed by user software

bit 10-9 **Unimplemented**: Read as ‘1’

bit 8 **$\overline{\text{CLKOUTEN}}$**: Clock Out Enable bit
If FEXTOSC = EC (high, mid or low) or Not Enabled:
1 = CLKOUT function is disabled; I/O or oscillator function on OSC2
0 = CLKOUT function is enabled; FOSC/4 clock appears at OSC2
Otherwise:
This bit is ignored.

bit 7 **Unimplemented**: Read as ‘1’

bit 6-4 **RSTOSC[2:0]**: Power-up Default Value for COSC bits
This value is the Reset-default value for COSC and selects the oscillator first used by user software.
111 = EXTOSC operating per FEXTOSC bits
110 = HFINTOSC (1 MHz) with OSCFRQ = 010 (4 MHz) and CDIV = 0010 (4:1)
101 = LFINTOSC
100 = SOSC
011 = Reserved
010 = EXTOSC with 4x PLL, with EXTOSC operating per FEXTOSC bits
001 = HFINTOSC with 2x PLL (32 MHz), with OSCFRQ = 101 (16 MHz) and CDIV = 0000 (1:1)
000 = HFINTOSC (32 MHz), with OSCFRQ = 110 (32 MHz) and CDIV = 0000 (1:1)

bit 3 **Unimplemented**: Read as ‘1’

bit 2-0 **FEXTOSC[2:0]**:FEXTOSC External Oscillator Mode Selection bits
111 = EC (External Clock) above 8 MHz; PFM set to high power (device manufacturing default)
110 = EC (External Clock) for 100 kHz to 8 MHz; PFM set to medium power
101 = EC (External Clock) below 100 kHz
100 = Oscillator not enabled
011 = Reserved (do not use)
010 = HS (Crystal oscillator) above 4 MHz; PFM set to high power
001 = XT (Crystal oscillator) above 100 kHz, below 4 MHz; PFM set to medium power
000 = LP (Crystal oscillator) optimized for 32.768 kHz; PFM set to low power

REGISTER 5-2: CONFIGURATION WORD 2: SUPERVISORS

R/P-1	R/P-1	R/P-1	R/P-1	R/P-1	U-1
$\overline{\text{DEBUG}}$	STVREN	PPS1WAY	ZCDDIS	BORV	—
bit 13					bit 8

R/P-1	R/P-1	R/P-1	U-1	U-1	U-1	R/P-1	R/P-1
BOREN1	BOREN0	$\overline{\text{LPBOREN}}$	—	—	—	$\overline{\text{PWRTE}}$	MCLRE
bit 7							bit 0

Legend:			
R = Readable bit	P = Programmable bit	x = Bit is unknown	U = Unimplemented bit, read as ‘1’
‘0’ = Bit is cleared	‘1’ = Bit is set	W = Writable bit	n = Value when blank or after Bulk Erase

bit 13 **$\overline{\text{DEBUG}}$**: Debugger Enable bit
1 = Background debugger disabled
0 = Background debugger enabled

bit 12 **STVREN**: Stack Overflow/Underflow Reset Enable bit
1 = Stack Overflow or Underflow will cause a Reset
0 = Stack Overflow or Underflow will not cause a Reset

bit 11 **PPS1WAY**: PPSLOCK One-Way Set Enable bit
1 = The PPSLOCK bit can be cleared and set only once; PPS registers remain locked after one clear/set cycle
0 = The PPSLOCK bit can be set and cleared repeatedly (subject to the unlock sequence)

bit 10 **ZCDDIS:** Zero-Cross Detect Disable bit
1 = ZCD disabled. ZCD can be enabled by setting the ZCDSEN bit of the ZCDCON register
0 = ZCD always enabled (ZCDSEN bit is ignored)

bit 9 **BORV**: Brown-out Reset Voltage Selection bit(1)
1 = Brown-out Reset voltage (V_{BOR}) set to lower trip point level
0 = Brown-out Reset voltage (V_{BOR}) set to higher trip point level

bit 8 **Unimplemented:** Read as ‘1’

bit 7-6 **BOREN[1:0]**: Brown-out Reset Enable bits
When enabled, Brown-out Reset Voltage (V_{BOR}) is set by the BORV bit
11 = Brown-out Reset is enabled; SBOREN bit is ignored
10 = Brown-out Reset is enabled while running, disabled in Sleep; SBOREN bit is ignored
01 = Brown-out Reset is enabled according to SBOREN
00 = Brown-out Reset is disabled

bit 5 **$\overline{\text{LPBOREN}}$**: Low-Power BOR Enable bit
1 = ULPBOR is disabled
0 = ULPBOR is enabled

bit 4-2 **Unimplemented**: Read as ‘1’

bit 1 **$\overline{\text{PWRTE}}$**: Power-up Timer Enable bit
1 = PWRT is disabled
0 = PWRT is enabled

bit 0 **MCLRE**: Master Clear ($\overline{\text{MCLR}}$) Enable bit
If LVP = 1:
RE3 pin function is $\overline{\text{MCLR}}$ (it will reset the device when driven low)
If LVP = 0:
1 = $\overline{\text{MCLR}}$ pin is $\overline{\text{MCLR}}$ (it will reset the device when driven low)
0 = $\overline{\text{MCLR}}$ pin may be used as general purpose RE3 input

Note 1: See Vbor parameter for specific trip point voltages.
2: The $\overline{\text{DEBUG}}$ bit in Configuration Words is managed automatically by device development tools including debuggers and programmers. For normal device operation, this bit must be maintained as a ‘1’.

REGISTER 5-3: CONFIGURATION WORD 3: WINDOWED WATCHDOG

R/P-1	R/P-1	R/P-1	R/P-1	R/P-1	R/P-1
WDTCCS2	WDTCCS1	WDTCCS0	WDTCWS2	WDTCWS1	WDTCWS0
bit 13					bit 8

U-1	R/P-1	R/P-1	R/P-1	R/P-1	R/P-1	R/P-1	R/P-1
—	WDTE1	WDTE0	WDTCPS4	WDTCPS3	WDTCPS2	WDTCPS1	WDTCPS0
bit 7							bit 0

Legend:			
R = Readable bit	P = Programmable bit	x = Bit is unknown	U = Unimplemented bit, read as ‘1’
‘0’ = Bit is cleared	‘1’ = Bit is set	W = Writable bit	n = Value when blank or after Bulk Erase

bit 13-11 **WDTCCS[2:0]**: WDT Input Clock Selector bits
- 111 = Software Control
- 110 = Reserved
- .
- .
- .
- .
- 010 = Reserved
- 001 = WDT reference clock is the 31.0 kHz LFINTOSC
- 000 = WDT reference clock is the 31.25 kHz HFINTOSC (MFINTOSC) output

bit 10-8 **WDTCWS[2:0]**: WDT Window Select bits

WDTCWS	WDTWS at POR			Software control of WDTWS?	Keyed access required?
	Value	Window delay Percent of time	Window opening Percent of time		
111	111	n/a	100	Yes	No
110	111	n/a	100	No	Yes
101	101	25	75		
100	100	37.5	62.5		
011	011	50	50		
010	010	62.5	37.5		
001	001	75	25		
000	000	87.5	12.5		

bit 7 **Unimplemented**: Read as ‘1’

bit 6-5 **WDTE[1:0]**: WDT Operating mode:
- 11 =WDT enabled regardless of Sleep; SWDTEN is ignored
- 10 =WDT enabled while Sleep = 0, suspended when Sleep = 1; SWDTEN ignored
- 01 =WDT enabled/disabled by SWDTEN bit in WDTCON0
- 00 =WDT disabled, SWDTEN is ignored

REGISTER 5-3: CONFIGURATION WORD 3: WINDOWED WATCHDOG (CONTINUED)

bit 4-0 **WDTCPS[4:0]**: WDT Period Select bits

WDTCPS	WDTPS at POR				Software Control of WDTPS?
	Value	Divider Ratio		Typical Time Out (FIN = 31 kHz)	
11111(1)	01011	1:65536	2^{16}	2 s	Yes
11110 ... 10011	11110 ... 10011	1:32	2^{5}	1 ms	No
10010	10010	1:8388608	2^{23}	256 s	No
10001	10001	1:4194304	2^{22}	128 s	
10000	10000	1:2097152	2^{21}	64 s	
01111	01111	1:1048576	2^{20}	32 s	
01110	01110	1:524299	2^{19}	16 s	
01101	01101	1:262144	2^{18}	8 s	
01100	01100	1:131072	2^{17}	4 s	
01011	01011	1:65536	2^{16}	2 s	
01010	01010	1:32768	2^{15}	1 s	
01001	01001	1:16384	2^{14}	512 ms	
01000	01000	1:8192	2^{13}	256 ms	
00111	00111	1:4096	2^{12}	128 ms	
00110	00110	1:2048	2^{11}	64 ms	
00101	00101	1:1024	2^{10}	32 ms	
00100	00100	1:512	2^{9}	16 ms	
00011	00011	1:256	2^{8}	8 ms	
00010	00010	1:128	2^{7}	4 ms	
00001	00001	1:64	2^{6}	2 ms	
00000	00000	1:32	2^{5}	1 ms	

Note 1: 0b11111 is the default value of the WDTCPS bits.

REGISTER 5-4: CONFIGURATION WORD 4: MEMORY

R/W-1	U-1	R/W-1	U-1	R/W-1	R/W-1
LVP	—	$\overline{\text{WRTSAF}}$(1)	—	$\overline{\text{WRTC}}$(1)	$\overline{\text{WRTB}}$(1)
bit 13	12	11	10	9	bit 8

R/W-1	U-1	U-1	R/W-1	R/W-1	R/W-1	R/W-1	R/W-1
$\overline{\text{WRTAPP}}$(1)	—	—	$\overline{\text{SAFEN}}$(1)	$\overline{\text{BBEN}}$(1)	BBSIZE2	BBSIZE1	BBSIZE0
bit 7	6	5	4	3	2	1	bit 0

Legend:			
R = Readable bit	P = Programmable bit	x = Bit is unknown	U = Unimplemented bit, read as ‘1’
‘0’ = Bit is cleared	‘1’ = Bit is set	W = Writable bit	n = Value when blank or after Bulk Erase

bit 13 **LVP:** Low Voltage Programming Enable bit
1 = Low voltage programming enabled. $\overline{\text{MCLR}}$/VPP pin function is $\overline{\text{MCLR}}$. MCLRE Configuration bit is ignored.
0 = HV on $\overline{\text{MCLR}}$/VPP must be used for programming.
The LVP bit cannot be written (to zero) while operating from the LVP programming interface. The purpose of this rule is to prevent the user from dropping out of LVP mode while programming from LVP mode, or accidentally eliminating LVP mode from the configuration state.
The preconditioned (erased) state for this bit is critical.

bit 12 **Unimplemented:** Read as ‘1’

bit 11 **$\overline{\text{WRTSAF}}$:** Storage Area Flash Write Protection bit
1 = SAF NOT write-protected
0 = SAF write-protected
Unimplemented, if SAF is not supported in the device family and only applicable if $\overline{\text{SAFEN}}$ = 0.

bit 10 **Unimplemented:** Read as ‘1’

bit 9 **$\overline{\text{WRTC}}$:** Configuration Register Write Protection bit
1 = Configuration Register NOT write-protected
0 = Configuration Register write-protected

bit 8 **$\overline{\text{WRTB}}$:** Boot Block Write Protection bit
1 = Boot Block NOT write-protected
0 = Boot Block write-protected
Only applicable if $\overline{\text{BBEN}}$ = 0.

bit 7 **$\overline{\text{WRTAPP}}$:** Application Block Write Protection bit
1 = Application Block NOT write-protected
0 = Application Block write-protected

bit 6-5 **Unimplemented:** Read as ‘1’

bit 4 **$\overline{\text{SAFEN}}$:** SAF Enable bit
1 = SAF disabled
0 = SAF enabled

bit 3 **$\overline{\text{BBEN}}$:** Boot Block Enable bit
1 = Boot Block disabled
0 = Boot Block enabled

bit 2-0 **BBSIZE[2:0]:** Boot Block Size Selection bits (See Table 5-1)
BBSIZE is used only when $\overline{\text{BBEN}}$ = 0
BBSIZ bits can only be written while $\overline{\text{BBEN}}$ = 1; after $\overline{\text{BBEN}}$ = 0, BBSIZ is write-protected.

Note 1: Bits are implemented as sticky bits. Once protection is enabled, it can only be reset through a Bulk Erase.

TABLE 5-1: BOOT BLOCK SIZE BITS

$\overline{\text{BBEN}}$	BBSIZE[2:0]	Actual Boot Block Size User Program Memory Size (words)	Last Boot Block Memory Access
		PIC16(L)F15324/44	
1	xxx	0	—
0	111	512	01FFh
0	110	1024	03FFh
0	101-000	2048	07FFh

Note: The maximum boot block size is half the user program memory size. All selections higher than the maximum are set to half size. For example, all BBSIZE = 000 - 100 produce a boot block size of 4kW on a 8kW device.

REGISTER 5-5: CONFIGURATION WORD 5: CODE PROTECTION

U-1	U-1	U-1	U-1	U-1	U-1
—	—	—	—	—	—
bit 13					bit 8

U-1	U-1	U-1	U-1	U-1	U-1	U-1	R/P-1
—	—	—	—	—	—	—	$\overline{CP}$
bit 7							bit 0

Legend:			
R = Readable bit	P = Programmable bit	x = Bit is unknown	U = Unimplemented bit, read as ‘1’
‘0’ = Bit is cleared	‘1’ = Bit is set	W = Writable bit	n = Value when blank or after Bulk Erase

bit 13-1 **Unimplemented:** Read as ‘1’

bit 0 **$\overline{CP}$:** Program Flash Memory Code Protection bit
1 = Program Flash Memory code protection disabled
0 = Program Flash Memory code protection enabled

5.3 Code Protection

Code protection allows the device to be protected from unauthorized access. Program memory protection and data memory are controlled independently. Internal access to the program memory is unaffected by any code protection setting.

5.3.1 PROGRAM MEMORY PROTECTION

The entire program memory space is protected from external reads and writes by the $\overline{CP}$ bit in Configuration Words. When $\overline{CP}$ = 0, external reads and writes of program memory are inhibited and a read will return all '0's. The CPU can continue to read program memory, regardless of the protection bit settings. Self-writing the program memory is dependent upon the write protection setting. See **Section 5.4 "Write Protection"** for more information.

5.4 Write Protection

Write protection allows the device to be protected from unintended self-writes. Applications, such as boot loader software, can be protected while allowing other regions of the program memory to be modified.

The $\overline{WRTAPP}$, $\overline{WRTSAF}$, $\overline{WRTB}$, $\overline{WRTC}$ bits in Configuration Words (Register 5-4) define whether the corresponding region of the program memory block is protected or not.

5.5 User ID

Four memory locations (8000h-8003h) are designated as ID locations where the user can store checksum or other code identification numbers. These locations are readable and writable during normal execution. See **Section 13.3.6 "NVMREG Access to Device Information Area, Device Configuration Area, User ID, Device ID and Configuration Words"** for more information on accessing these memory locations. For more information on checksum calculation, see the *"PIC16(L)F153XX Memory Programming Specification"* (DS40001838).

5.6 Device ID and Revision ID

The 14-bit Device ID word is located at 8006h and the 14-bit Revision ID is located at 8005h. These locations are read-only and cannot be erased or modified.

Development tools, such as device programmers and debuggers, may be used to read the Device ID, Revision ID and Configuration Words. These locations can also be read from the NVMCON register.

5.7 Register Definitions: Device and Revision

REGISTER 5-6: DEVID: DEVICE ID REGISTER

R	R	R	R	R	R
DEV[13:8]					
bit 13					bit 8

R	R	R	R	R	R	R	R
DEV[7:0]							
bit 7							bit 0

Legend:	
R = Readable bit	
‘1’ = Bit is set	‘0’ = Bit is cleared

bit 13-0 **DEV[13:0]:** Device ID bits

Device	DEVID[13:0] Values
PIC16F15324	11 0000 1100 0010 (30C2h)
PIC16LF15324	11 0000 1100 0011 (30C3h)
PIC16F15344	11 0000 1100 0100 (30C4h)
PIC16LF15344	11 0000 1100 0101 (30C5h)

REGISTER 5-7: REVISIONID: REVISION ID REGISTER

R	R	R	R	R	R	R	R	R	R	R	R	R	R
1	0	MJRREV[5:0]						MNRREV[5:0]					
bit 13													bit 0

Legend:		
R = Readable bit		
‘0’ = Bit is cleared	‘1’ = Bit is set	x = Bit is unknown

bit 13-12 **Fixed Value**: Read-only bits
These bits are fixed with value ‘`10`’ for all devices included in this data sheet.

bit 11-6 **MJRREV[5:0]**: Major Revision ID bits
These bits are used to identify a major revision.

bit 5-0 **MNRREV[5:0]**: Minor Revision ID bits
These bits are used to identify a minor revision.

6.0 DEVICE INFORMATION AREA

The Device Information Area (DIA) is a dedicated region in the program memory space; it is a new feature in the PIC16(L)F15324/44 family of devices. The DIA contains the calibration data for the internal temperature indicator module, stores the Microchip Unique Identifier words and the Fixed Voltage Reference voltage readings measured in mV.

The complete DIA table is shown in Table 6-1: Device Information Area, followed by a description of each region and its functionality. The data is mapped from 8100h to 811Fh in the PIC16(L)F15324/44 family. These locations are read-only and cannot be erased or modified. The data is programmed into the device during manufacturing.

TABLE 6-1: DEVICE INFORMATION AREA

Address Range	Name of Region	Standard Device Information
8100h-8108h	MUI0	Microchip Unique Identifier (9 Words)
	MUI1	
	MUI2	
	MUI3	
	MUI4	
	MUI5	
	MUI6	
	MUI7	
	MUI8	
8109h	MUI9	1 Word Reserved
810Ah-8111h	EUI0	Unassigned (8 Words)
	EUI1	
	EUI2	
	EUI3	
	EUI4	
	EUI5	
	EUI6	
	EUI7	
8112h	TSLR1	Unassigned (1 word)
8113h	TSLR2	Temperature indicator ADC reading at 90°C (low range setting)
8114h	TSLR3	Unassigned (1 word)
8115h	TSHR1	Unassigned (1 word)
8116h	TSHR2	Temperature indicator ADC reading at 90°C (high range setting)
8117h	TSHR3	Unassigned (1 Word)
8118h	FVRA1X	ADC FVR1 Output voltage for 1x setting (in mV)
8119h	FVRA2X	ADC FVR1 Output Voltage for 2x setting (in mV)
811Ah	FVRA4X(1)	ADC FVR1 Output Voltage for 4x setting (in mV)
811Bh	FVRC1X	Comparator FVR2 output voltage for 1x setting (in mV)
811Ch	FVRC2X	Comparator FVR2 output voltage for 2x setting (in mV)
811Dh	FVRC4X(1)	Comparator FVR2 output voltage for 4x setting (in mV)
811Eh-811Fh		Unassigned (1 Word)

Note 1: Value not present on LF devices.

6.1 Microchip Unique identifier (MUI)

The PIC16(L)F15324/44 devices are individually encoded during final manufacturing with a Microchip Unique Identifier, or MUI. The MUI cannot be erased by a Bulk Erase command or any other user-accessible means. This feature allows for manufacturing traceability of Microchip Technology devices in applications where this is a required. It may also be used by the application manufacturer for a number of functions that require unverified unique identification, such as:

- Tracking the device
- Unique serial number

The MUI consists of nine program words. When taken together, these fields form a unique identifier. The MUI is stored in nine read-only locations, located between 8100h to 8109h in the DIA space. Table 6-1 lists the addresses of the identifier words.

Note:	For applications that require verified unique identification, contact the Microchip Technology sales office to create a Serialized Quick Turn Programming option.

6.2 External Unique Identifier (EUI)

The EUI data is stored at locations 810Ah to 8111h in the program memory region. This region is an optional space for placing application specific information. The data is coded per customer requirements during manufacturing. The EUI cannot be erased by a Bulk Erase command.

Note:	Data is stored in this address range on receiving a request from the customer. The customer may contact the local sales representative or Field Applications Engineer, and provide them the unique identifier information that is required to be stored in this region.

6.3 Analog-to-Digital Conversion Data of the Temperature Sensor

The purpose of the temperature indicator module is to provide a temperature-dependent voltage that can be measured by an analog module. **Section 19.0 "Temperature Indicator Module"** explains the operation of the Temperature Indicator module and defines terms such as the low range and high range settings of the sensor.

The DIA table contains the internal ADC measurement values of the temperature sensor for low and high range at fixed points of reference. The values are measured during test and are unique to each device. The right-justified ADC readings are stored in the DIA memory region. The calibration data can be used to plot the approximate sensor output voltage, V_{TSENSE} vs. Temperature curve.

- **TSLR[3:1]**: Address 8112h to 8114h store the measurements for the low range setting of the temperature sensor at V_{DD} = 3V.
- **TSHR[3:1]**: Address 8115h to 8117h store the measurements for the high range setting of the temperature sensor at V_{DD} = 3V.

The stored measurements are made by the device ADC using the internal V_{REF} = 2.048V.

6.4 Fixed Voltage Reference Data

The Fixed Voltage Reference, or FVR, is a stable voltage reference, independent of V_{DD}, with 1.024V, 2.048V or 4.096V selectable output levels. The output of the FVR can be configured to supply a reference voltage to the following:

- ADC input channel
- ADC positive reference
- Comparator positive input
- Digital-to-Analog Converter

For more information on the FVR, refer to **Section 18.0 "Fixed Voltage Reference (FVR)"**.

The DIA stores measured FVR voltages for this device in mV for the different buffer settings of 1x, 2x or 4x at program memory locations 8118h to 811Dh.

- FVRA1X stores the value of ADC FVR1 Output voltage for 1x setting (in mV)
- FVRA2X stores the value of ADC FVR1 Output Voltage for 2x setting (in mV)
- FVRA4X stores the value of ADC FVR1 Output Voltage for 4x setting (in mV)
- FVRC1X stores the value of Comparator FVR2 output voltage for 1x setting (in mV)
- FVRC2X stores the value of Comparator FVR2 output voltage for 2x setting (in mV)
- FVRC4X stores the value of Comparator FVR2 output voltage for 4x setting (in mV)

© 2017-2021 Microchip Technology Inc.

7.0 DEVICE CONFIGURATION INFORMATION

The Device Configuration Information (DCI) is a dedicated region in the Program Flash Memory mapped from 8200h to 821Fh. The data stored in the DCI memory is hard-coded into the device during manufacturing.

Refer to Table 7-1 for the complete DCI table address and description. The DCI holds information about the device which is useful for programming and bootloader applications. These locations are read-only and cannot be erased or modified.

TABLE 7-1: DEVICE CONFIGURATION INFORMATION FOR PIC16(L)F15324/44 DEVICES

ADDRESS	Name	DESCRIPTION	VALUE	UNITS
			PIC16(L)F15324/44	
8200h	ERSIZ	Erase Row Size	32	Words
8201h	WLSIZ	Number of write latches	32	Latches
8202h	URSIZ	Number of User Rows	128	Rows
8203h	EESIZ	EE Data memory size	0	Bytes
8204h	PCNT	Pin Count	14/20	Pins

7.1 DIA and DCI Access

The DIA and DCI data are read-only and cannot be erased or modified. See **13.3.6 “NVMREG Access to Device Information Area, Device Configuration Area, User ID, Device ID and Configuration Words”** for more information on accessing these memory locations.

Development tools, such as device programmers and debuggers, may be used to read the DIA and DCI regions, similar to the Device ID and Revision ID.

8.0 RESETS

There are multiple ways to reset this device:

- Power-on Reset (POR)
- Brown-out Reset (BOR)
- Low-Power Brown-out Reset (LPBOR)
- $\overline{\text{MCLR}}$ Reset
- WDT Reset
- RESET instruction
- Stack Overflow
- Stack Underflow
- Programming mode exit
- Memory Violation Reset ($\overline{\text{MEMV}}$)

To allow VDD to stabilize, an optional Power-up Timer can be enabled to extend the Reset time after a BOR or POR event.

A simplified block diagram of the On-Chip Reset Circuit is shown in Figure 8-1.

FIGURE 8-1: SIMPLIFIED BLOCK DIAGRAM OF ON-CHIP RESET CIRCUIT

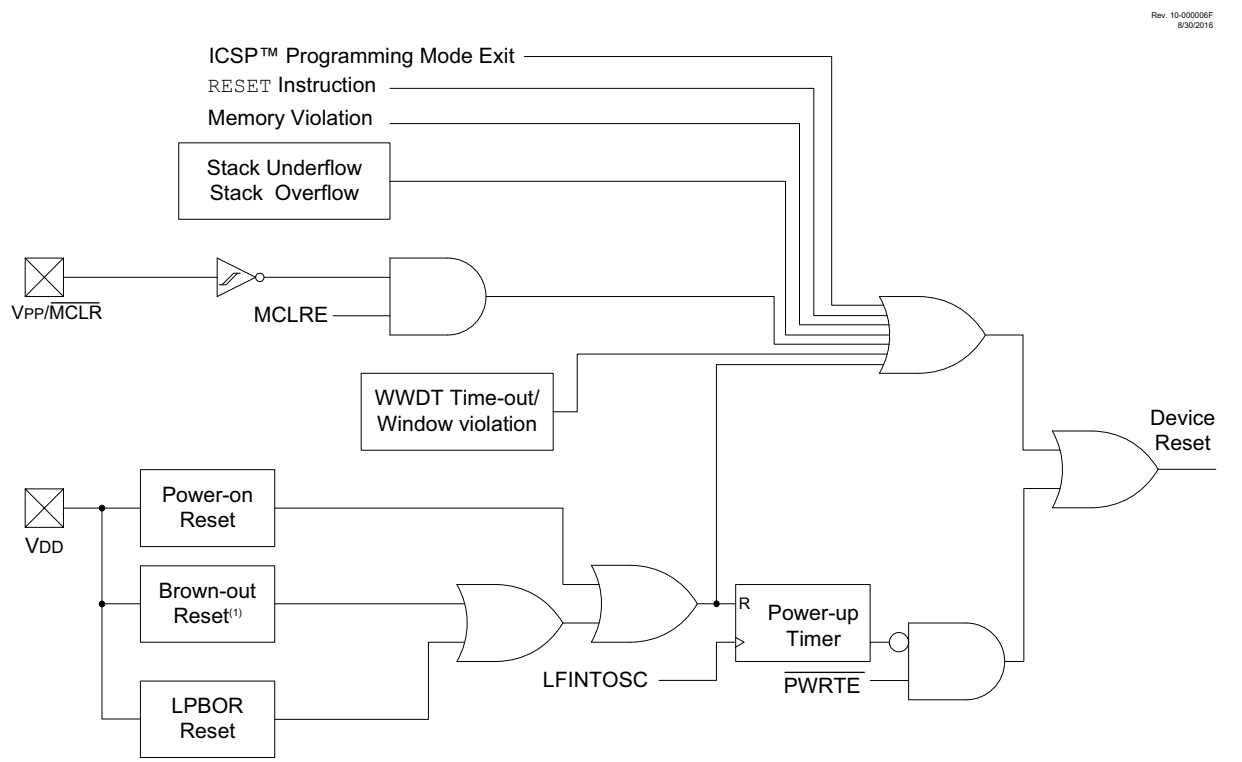

Note 1: See Table 8-1 for BOR active conditions.

8.1 Power-on Reset (POR)

The POR circuit holds the device in Reset until VDD has reached an acceptable level for minimum operation. Slow rising VDD, fast operating speeds or analog performance may require greater than minimum VDD. The PWRT, BOR or $\overline{\text{MCLR}}$ features can be used to extend the start-up period until all device operation conditions have been met.

8.2 Brown-out Reset (BOR)

The BOR circuit holds the device in Reset when VDD reaches a selectable minimum level. Between the POR and BOR, complete voltage range coverage for execution protection can be implemented.

The Brown-out Reset module has four operating modes controlled by the BOREN[1:0] bits in Configuration Words. The four operating modes are:

- BOR is always on
- BOR is off when in Sleep
- BOR is controlled by software
- BOR is always off

Refer to Table 8-1 for more information.

The Brown-out Reset voltage level is selectable by configuring the BORV bit in Configuration Words.

A VDD noise rejection filter prevents the BOR from triggering on small events. If VDD falls below VBOR for a duration greater than parameter TBORDC, the device will reset. See Figure 8-2 for more information.

TABLE 8-1: BOR OPERATING MODES

BOREN[1:0]	SBOREN	Device Mode	BOR Mode	Instruction Execution upon: Release of POR or Wake-up from Sleep
11	x	X	Active	Wait for release of BOR(1) (BORRDY = 1)
10	x	Awake	Active	Waits for release of BOR (BORRDY = 1) Waits for BOR Reset release
		Sleep	Disabled	
01	1	X	Active	Waits for BOR Reset release (BORRDY = 1)
	0	X	Disabled	Begins immediately (BORRDY = x)
00	x	X	Disabled	

Note 1: In this specific case, “Release of POR” and “Wake-up from Sleep”, there is no delay in start-up. The BOR ready flag, (BORRDY = 1), will be set before the CPU is ready to execute instructions because the BOR circuit is forced on by the BOREN[1:0] bits.

8.2.1 BOR IS ALWAYS ON

When the BOREN bits of Configuration Words are programmed to ‘11’, the BOR is always on. The device start-up will be delayed until the BOR is ready and VDD is higher than the BOR threshold.

BOR protection is active during Sleep. The BOR does not delay wake-up from Sleep.

8.2.2 BOR IS OFF IN SLEEP

When the BOREN bits of Configuration Words are programmed to ‘10’, the BOR is on, except in Sleep. The device start-up will be delayed until the BOR is ready and VDD is higher than the BOR threshold.

BOR protection is not active during Sleep. The device wake-up will be delayed until the BOR is ready.

8.2.3 BOR CONTROLLED BY SOFTWARE

When the BOREN bits of Configuration Words are programmed to '01', the BOR is controlled by the SBOREN bit of the BORCON register. The device start-up is not delayed by the BOR ready condition or the VDD level.

BOR protection begins as soon as the BOR circuit is ready. The status of the BOR circuit is reflected in the BORRDY bit of the BORCON register.

BOR protection is unchanged by Sleep.

8.2.4 BOR IS ALWAYS OFF

When the BOREN bits of the Configuration Words are programmed to '00', the BOR is off at all times. The device start-up is not delayed by the BOR ready condition or the VDD level.

FIGURE 8-2: BROWN-OUT SITUATIONS

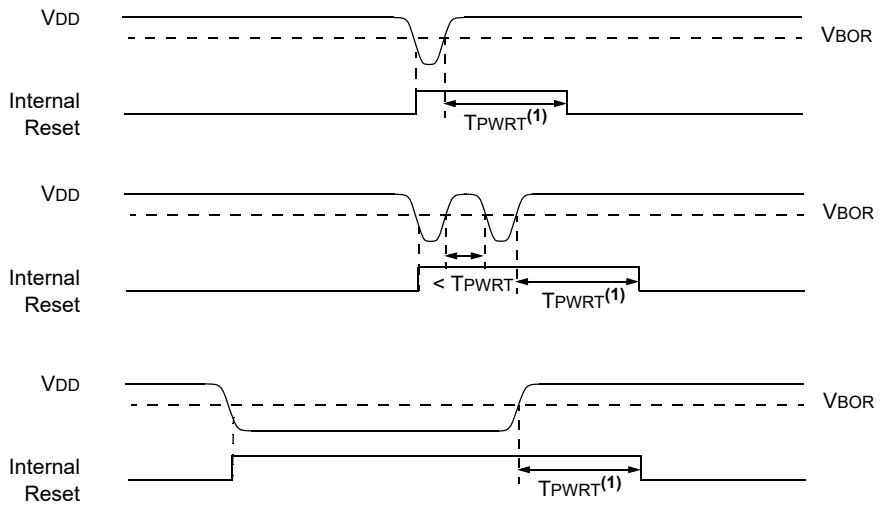

Note 1: TPWRT delay only if $\overline{\text{PWRTE}}$ bit is programmed to '0'.

8.3 Register Definitions: Brown-out Reset Control

REGISTER 8-1: BORCON: BROWN-OUT RESET CONTROL REGISTER

R/W-1/u	U-0	U-0	U-0	U-0	U-0	U-0	R-q/u
SBOREN(1)	—	—	—	—	—	—	BORRDY
bit 7							bit 0

Legend:		
R = Readable bit	W = Writable bit	U = Unimplemented bit, read as ‘0’
u = Bit is unchanged	x = Bit is unknown	-n/n = Value at POR and BOR/Value at all other Resets
‘1’ = Bit is set	‘0’ = Bit is cleared	q = Value depends on condition

bit 7 **SBOREN:** Software Brown-out Reset Enable bit(1)
If BOREN [1:0] in Configuration Words ≠ 01:
SBOREN is read/write, but has no effect on the BOR.
If BOREN [1:0] in Configuration Words = 01:
1 = BOR Enabled
0 = BOR Disabled

bit 6-1 **Unimplemented:** Read as ‘0’

bit 0 **BORRDY:** Brown-out Reset Circuit Ready Status bit
1 = The Brown-out Reset circuit is active
0 = The Brown-out Reset circuit is inactive

Note 1: BOREN[1:0] bits are located in Configuration Words.

8.4 Low-Power Brown-out Reset (LPBOR)

The Low-Power Brown-out Reset (LPBOR) is an important part of the Reset subsystem. Refer to Figure 8-1 to see how the BOR and LPBOR interact with other modules.

The LPBOR is used to monitor the external VDD pin. When too low of a voltage is detected, the device is held in Reset.

8.4.1 ENABLING LPBOR

The LPBOR is controlled by the $\overline{\text{LPBOR}}$ bit of the Configuration Word (Register 5-1). When the device is erased, the LPBOR module defaults to disabled.

8.4.2 LPBOR MODULE OUTPUT

The output of the LPBOR module is a signal indicating whether or not a Reset is to be asserted. When this occurs, a register bit ($\overline{\text{BOR}}$) is changed to indicate that a BOR Reset has occurred. The same bit is set for either the BOR or the LPBOR (refer to Register 8-3). This signal is OR'd with the output of the BOR module to provide the generic $\overline{\text{BOR}}$ signal, which goes to the PCON register and to the power control block. Refer to Figure 8-1 for the OR gate connections of the BOR and LPBOR Reset signals, which eventually generates one common BOR Reset.

8.5 $\overline{\text{MCLR}}$

The $\overline{\text{MCLR}}$ is an optional external input that can reset the device. The $\overline{\text{MCLR}}$ function is controlled by the MCLRE bit of Configuration Words and the LVP bit of Configuration Words (Table 8-2).

TABLE 8-2: $\overline{\text{MCLR}}$ CONFIGURATION

MCLRE	LVP	$\overline{\text{MCLR}}$
0	0	Disabled
1	0	Enabled
x	1	Enabled

8.5.1 $\overline{\text{MCLR}}$ ENABLED

When $\overline{\text{MCLR}}$ is enabled and the pin is held low, the device is held in Reset. The $\overline{\text{MCLR}}$ pin is connected to VDD through an internal weak pull-up. Refer to **Section 2.3 "Master Clear (MCLR) Pin"** for recommended $\overline{\text{MCLR}}$ connections.

The device has a noise filter in the $\overline{\text{MCLR}}$ Reset path. The filter will detect and ignore small pulses.

Note: A Reset does not drive the $\overline{\text{MCLR}}$ pin low.

8.5.2 $\overline{\text{MCLR}}$ DISABLED

When $\overline{\text{MCLR}}$ is disabled, the pin functions as a general purpose input and the internal weak pull-up is under software control. See **Section 14.1 "I/O Priorities"** for more information.

8.6 Windowed Watchdog Timer (WWDT) Reset

The Watchdog Timer generates a Reset if the firmware does not issue a `CLRWDT` instruction within the time-out period and the window is open. The $\overline{\text{TO}}$ and $\overline{\text{PD}}$ bits in the STATUS register and the $\overline{\text{WDT}}$ bit in PCON are changed to indicate a WDT Reset caused by the timer overflowing, and WDTWV bit in the PCON register is changed to indicate a WDT Reset caused by a window violation. See **Section 12.0 "Windowed Watchdog Timer (WWDT)"** for more information.

8.7 `RESET` Instruction

A `RESET` instruction will cause a device Reset. The $\overline{\text{RI}}$ bit in the PCON register will be set to '0'. See Table 8-4 for default conditions after a `RESET` instruction has occurred.

8.8 Stack Overflow/Underflow Reset

The device can reset when the Stack Overflows or Underflows. The STKOVF or STKUNF bits of the PCON register indicate the Reset condition. These Resets are enabled by setting the STVREN bit in Configuration Words. See **Section 4.5.2 "Overflow/Underflow Reset"** for more information.

8.9 Programming Mode Exit

Upon exit of In-Circuit Serial Programming™ (ICSP™) mode, the device will behave as if a POR had just occurred (the device does not reset upon run time self-programming/erase operations).

8.10 Power-up Timer

The Power-up Timer optionally delays device execution after a BOR or POR event. This timer is typically used to allow VDD to stabilize before allowing the device to start running.

The Power-up Timer is controlled by the $\overline{\text{PWRTE}}$ bit of the Configuration Words.

The Power-up Timer provides a nominal 64 ms time out on POR or Brown-out Reset. The device is held in Reset as long as PWRT is active. The PWRT delay allows additional time for the VDD to rise to an acceptable level. The Power-up Timer is enabled by clearing the $\overline{\text{PWRTE}}$ bit in the Configuration Words. The Power-up Timer starts after the release of the POR and BOR. For additional information, refer to Application Note AN607, "*Power-up Trouble Shooting*" (DS00607).

8.11 Start-up Sequence

Upon the release of a POR or BOR, the following must occur before the device will begin executing:

1. Power-up Timer runs to completion (if enabled).
2. Oscillator start-up timer runs to completion (if required for oscillator source).
3. $\overline{\text{MCLR}}$ must be released (if enabled).

The total time-out will vary based on oscillator configuration and Power-up Timer Configuration. See **Section 9.0 "Oscillator Module (with Fail-Safe Clock Monitor)"** for more information.

The Power-up Timer runs independently of $\overline{\text{MCLR}}$ Reset. If $\overline{\text{MCLR}}$ is kept low long enough, the Power-up Timer and oscillator start-up timer will expire. This is useful for testing purposes or to synchronize more than one device operating in parallel. See Figure 8-3.

FIGURE 8-3: RESET START-UP SEQUENCE

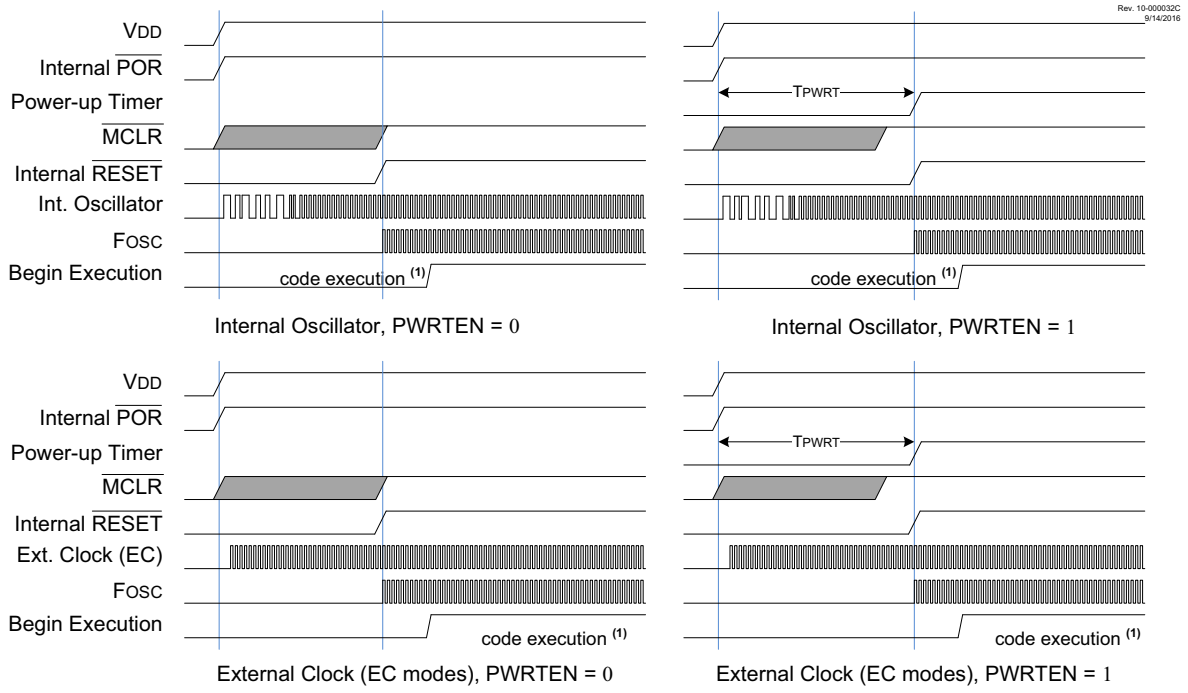

Note 1: Code execution begins 10 FOSC cycles after the FOSC clock is released.

8.12 Memory Execution Violation

A Memory Execution Violation Reset occurs if executing an instruction being fetched from outside the valid execution area. The different valid execution areas are defined as follows:

- Flash Memory: Table 4-1 shows the addresses available on the PIC16(L)F15324/44 devices based on user Flash size. Execution outside this region generates a memory execution violation.
- Storage Area Flash (SAF): If Storage Area Flash (SAF) is enabled (**Section 4.2.3 "Storage Area Flash"**), the SAF area (Table 4-2) is not a valid execution area.

Prefetched instructions that are not executed do not cause memory execution violations. For example, a `GOTO` instruction in the last memory location will prefetch from an invalid location; this is not an error. If an instruction from an invalid location tries to execute, the memory violation is generated immediately, and any concurrent interrupt requests are ignored. When a memory execution violation is generated, the device is reset and flag $\overline{\text{MEMV}}$ is cleared in PCON1 (Register 8-3) to signal the cause. The flag needs to be set in code after a memory execution violation.

8.13 Determining the Cause of a Reset

Upon any Reset, multiple bits in the STATUS and PCON registers are updated to indicate the cause of the Reset. Table 8-3 and Table 8-4 show the Reset conditions of these registers.

TABLE 8-3: RESET STATUS BITS AND THEIR SIGNIFICANCE

STOVF	STKUNF	$\overline{\text{RWDT}}$	$\overline{\text{RMCLR}}$	$\overline{\text{RI}}$	$\overline{\text{POR}}$	$\overline{\text{BOR}}$	$\overline{\text{TO}}$	$\overline{\text{PD}}$	$\overline{\text{MEMV}}$	Condition
0	0	1	1	1	0	x	1	1	1	Power-on Reset
0	0	1	1	1	0	x	0	x	u	Illegal, $\overline{\text{TO}}$ is set on $\overline{\text{POR}}$
0	0	1	1	1	0	x	x	0	u	Illegal, $\overline{\text{PD}}$ is set on $\overline{\text{POR}}$
0	0	u	1	1	u	0	1	1	u	Brown-out Reset
u	u	0	u	u	u	u	0	u	u	WWDT Reset
u	u	u	u	u	u	u	0	0	u	WWDT Wake-up from Sleep
u	u	u	u	u	u	u	1	0	u	Interrupt Wake-up from Sleep
u	u	u	0	u	u	u	u	u	1	$\overline{\text{MCLR}}$ Reset during normal operation
u	u	u	0	u	u	u	1	0	u	$\overline{\text{MCLR}}$ Reset during Sleep
u	u	u	u	0	u	u	u	u	u	RESET Instruction Executed
1	u	u	u	u	u	u	u	u	u	Stack Overflow Reset (STVREN = 1)
u	1	u	u	u	u	u	u	u	u	Stack Underflow Reset (STVREN = 1)
u	u	u	u	u	u	u	u	u	0	Memory violation Reset

TABLE 8-4: RESET CONDITION FOR SPECIAL REGISTERS

Condition	Program Counter	STATUS Register	PCON0 Register	PCON1 Register
Power-on Reset	0000h	---1 1000	0011 110x	---- --1-
$\overline{\text{MCLR}}$ Reset during normal operation	0000h	---u uuuu	uuuu 0uuu	---- --1-
$\overline{\text{MCLR}}$ Reset during Sleep	0000h	---1 0uuu	uuuu 0uuu	---- --u-
WWDT Time-Out Reset	0000h	---0 uuuu	uuu0 uuuu	---- --u-
WWDT Wake-up from Sleep	PC + 1	---0 0uuu	uuuu uuuu	---- --u-
WWDT Window Violation	0000h	---u uuuu	uu0u uuuu	---- --u-
Brown-out Reset	0000h	---1 1000	0011 11u0	---- --u-
Interrupt Wake-up from Sleep	PC + 1(1)	---1 0uuu	uuuu uuuu	---- --u-
RESET Instruction Executed	0000h	---u uuuu	uuuu u0uu	---- --u-
Stack Overflow Reset (STVREN = 1)	0000h	---u uuuu	1uuu uuuu	---- --u-
Stack Underflow Reset (STVREN = 1)	0000h	---u uuuu	u1uu uuuu	---- --u-
Memory Violation Reset ($\overline{\text{MEMV}}$ = 0)	0	-uuu uuuu	uuuu uuuu	---- --0-

Legend: u = unchanged, x = unknown, - = unimplemented bit, reads as '0'.

Note 1: When the wake-up is due to an interrupt and Global Enable (GIE) bit is set, the return address is pushed on the stack and PC is loaded with the interrupt vector (0004h) after execution of PC + 1.

8.14 Power Control (PCONx) Registers

The Power Control (PCONx) registers contain flag bits to differentiate between a:

- Power-on Reset ($\overline{\text{POR}}$)
- Brown-out Reset ($\overline{\text{BOR}}$)
- Reset Instruction Reset ($\overline{\text{RI}}$)
- $\overline{\text{MCLR}}$ Reset ($\overline{\text{RMCLR}}$)
- Watchdog Timer Reset ($\overline{\text{RWDT}}$)
- Watchdog Timer Window Violation Reset ($\overline{\text{WDTWV}}$)
- Stack Underflow Reset (STKUNF)
- Stack Overflow Reset (STKOVF)
- Memory Violation Reset ($\overline{\text{MEMV}}$)

The PCON0 register bits are shown in Register 8-3. The PCON1 register bits are shown in Register 8-3.

Hardware will change the corresponding register bit during the Reset process; if the Reset was not caused by the condition, the bit remains unchanged (Table 8-4).

Software will reset the bit to the inactive state after the restart (hardware will not reset the bit).

Software may also set any PCON bit to the active state, so that user code may be tested, but no Reset action will be generated.

8.15 Register Definitions: Power Control

REGISTER 8-2: PCON0: POWER CONTROL REGISTER 0

R/W/HS-0/q	R/W/HS-0/q	R/W/HC-1/q	R/W/HC-1/q	R/W/HC-1/q	R/W/HC-1/q	R/W/HC-q/u	R/W/HC-q/u
STKOVF	STKUNF	$\overline{\text{WDTWV}}$	$\overline{\text{RWDT}}$	$\overline{\text{RMCLR}}$	$\overline{\text{RI}}$	$\overline{\text{POR}}$	$\overline{\text{BOR}}$
bit 7							bit 0

Legend:		
HC = Bit is cleared by hardware		HS = Bit is set by hardware
R = Readable bit	W = Writable bit	U = Unimplemented bit, read as ‘0’
u = Bit is unchanged	x = Bit is unknown	-m/n = Value at POR/Value at all other Resets
‘1’ = Bit is set	‘0’ = Bit is cleared	q = Value depends on condition

bit 7 **STKOVF:** Stack Overflow Flag bit
1 = A Stack Overflow occurred
0 = A Stack Overflow has not occurred or cleared by firmware

bit 6 **STKUNF:** Stack Underflow Flag bit
1 = A Stack Underflow occurred
0 = A Stack Underflow has not occurred or cleared by firmware

bit 5 **$\overline{\text{WDTWV}}$:** WDT Window Violation Flag bit
1 = A WDT Window Violation Reset has not occurred or set to ‘1’ by firmware
0 = A WDT Window Violation Reset has occurred (a CLRWDT instruction was executed either without arming the window or outside the window (cleared by hardware)

bit 4 **$\overline{\text{RWDT}}$:** Watchdog Timer Reset Flag bit
1 = A Watchdog Timer Reset has not occurred or set to ‘1’ by firmware
0 = A Watchdog Timer Reset has occurred (cleared by hardware)

bit 3 **$\overline{\text{RMCLR}}$:** $\overline{\text{MCLR}}$ Reset Flag bit
1 = A $\overline{\text{MCLR}}$ Reset has not occurred or set to ‘1’ by firmware
0 = A $\overline{\text{MCLR}}$ Reset has occurred (cleared by hardware)

bit 2 **$\overline{\text{RI}}$:** RESET Instruction Flag bit
1 = A RESET instruction has not been executed or set to ‘1’ by firmware
0 = A RESET instruction has been executed (cleared by hardware)

bit 1 **$\overline{\text{POR}}$:** Power-on Reset Status bit
1 = No Power-on Reset occurred
0 = A Power-on Reset occurred (must be set in software after a Power-on Reset occurs)

bit 0 **$\overline{\text{BOR}}$:** Brown-out Reset Status bit
1 = No Brown-out Reset occurred
0 = A Brown-out Reset occurred (must be set in software after a Power-on Reset or Brown-out Reset occurs)

REGISTER 8-3: PCON1: POWER CONTROL REGISTER 0

U-0	U-0	U-0	U-0	U-0	U-0	R/W/HC-1/u	U-0
—	—	—	—	—	—	$\overline{\text{MEMV}}$	—
bit 7							bit 0

Legend:		
HC = Bit is cleared by hardware		
R = Readable bit	W = Writable bit	U = Unimplemented bit, read as '0'
u = Bit is unchanged	x = Bit is unknown	-m/n = Value at POR and BOR/Value at all other Resets
'1' = Bit is set	'0' = Bit is cleared	q = Value depends on condition

bit 7-2 **Unimplemented:** Read as '0'

bit 1 **$\overline{\text{MEMV}}$:** Memory Violation Flag bit
1 = No Memory Violation Reset occurred or set to '1' by firmware.
0 = A Memory Violation Reset occurred (set to '0' in hardware when a Memory Violation occurs))

bit 0 **Unimplemented:** Read as '0'

TABLE 8-5: SUMMARY OF REGISTERS ASSOCIATED WITH RESETS

Name	Bit 7	Bit 6	Bit 5	Bit 4	Bit 3	Bit 2	Bit 1	Bit 0	Register on Page
BORCON	SBOREN	—	—	—	—	—	—	BORRDY	96
PCON0	STKOVF	STKUNF	$\overline{\text{WDTWV}}$	$\overline{\text{RWDT}}$	$\overline{\text{RMCLR}}$	$\overline{\text{RI}}$	$\overline{\text{POR}}$	$\overline{\text{BOR}}$	103
PCON1	—	—	—	—	—	—	$\overline{\text{MEMV}}$	—	103
STATUS	—	—	—	$\overline{\text{TO}}$	$\overline{\text{PD}}$	Z	DC	C	36
WDTCON0	—	—	WDTPS[4:0]					SWDTEN	154

Legend: — = unimplemented location, read as '0'. Shaded cells are not used by Resets.

9.0 OSCILLATOR MODULE (WITH FAIL-SAFE CLOCK MONITOR)

9.1 Overview

The oscillator module has a wide variety of clock sources and selection features that allow it to be used in a wide range of applications while maximizing performance and minimizing power consumption. Figure 9-1 illustrates a block diagram of the oscillator module.

Clock sources can be supplied from external oscillators, quartz-crystal resonators. In addition, the system clock source can be supplied from one of two internal oscillators and PLL circuits, with a choice of speeds selectable via software. Additional clock features include:

- Selectable system clock source between external or internal sources via software.
- Fail-Safe Clock Monitor (FSCM) designed to detect a failure of the external clock source (LP, XT, HS, ECH, ECM, ECL) and switch automatically to the internal oscillator.
- Oscillator Start-up Timer (OST) ensures stability of crystal oscillator sources.

The RSTOSC bits of Configuration Word 1 determine the type of oscillator that will be used when the device resets, including when it is first powered up.

The internal clock modes, LFINTOSC, HFINTOSC (set at 1 MHz), or HFINTOSC (set at 32 MHz) can be set through the RSTOSC bits.

If an external clock source is selected, the FEXTOSC bits of Configuration Word 1 must be used to select the external clock mode.

The external oscillator module can be configured in one of the following clock modes, by setting the FEXTOSC[2:0] bits of Configuration Word 1:

1. ECL – External Clock Low Power mode ECL<= 500 kHz
2. ECM – External Clock Medium Power mode ECM <= 8 MHz
3. ECH – External Clock High Power mode ECH <= 32 MHz
4. LP – 32 kHz Low-Power Crystal mode.
5. XT – Medium Gain Crystal or Ceramic Resonator Oscillator mode (between 100 kHz and 4 MHz)
6. HS – High Gain Crystal or Ceramic Resonator mode (above 4 MHz)

The ECH, ECM, and ECL clock modes rely on an external logic level signal as the device clock source. The LP, XT, and HS clock modes require an external crystal or resonator to be connected to the device. Each mode is optimized for a different frequency range. The INTOSC internal oscillator block produces low and high-frequency clock sources, designated LFINTOSC and HFINTOSC. (see Internal Oscillator Block, Figure 9-1). A wide selection of device clock frequencies may be derived from these clock sources.

FIGURE 9-1: SIMPLIFIED PIC® MCU CLOCK SOURCE BLOCK DIAGRAM

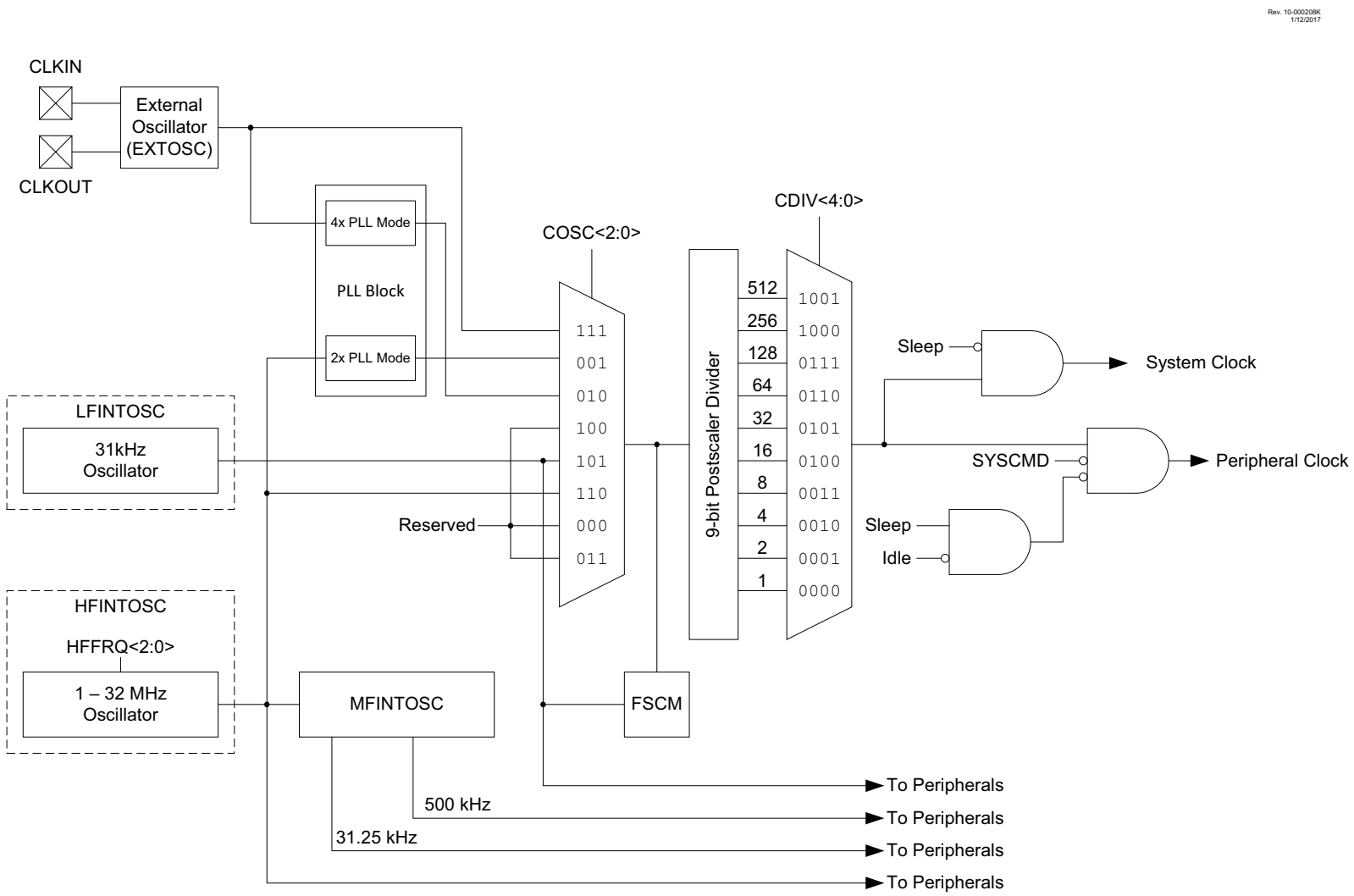

9.2 Clock Source Types

Clock sources can be classified as external or internal.

External clock sources rely on external circuitry for the clock source to function. Examples are: oscillator modules (ECH, ECM, ECL mode), quartz crystal resonators or ceramic resonators (LP, XT and HS modes).

Internal clock sources are contained within the oscillator module. The internal oscillator block has two internal oscillators and a dedicated Phase Lock Loop (PLL) that are used to generate internal system clock sources. The High-Frequency Internal Oscillator (HFINTOSC) can produce a range from 1 to 32 MHz. The Low-Frequency Internal Oscillator (LFINTOSC) generates a 31 kHz frequency. The external oscillator block can also be used with the PLL. See **Section 9.2.1.4 "4x PLL"** for more details.

The system clock can be selected between external or internal clock sources via the NOSC bits in the OSCCON1 register. See **Section 9.3 "Clock Switching"** for additional information.

9.2.1 EXTERNAL CLOCK SOURCES

An external clock source can be used as the device system clock by performing one of the following actions:

- Program the RSTOSC[2:0] bits in the Configuration Words to select an external clock source that will be used as the default system clock upon a device Reset
- Write the NOSC[2:0] and NDIV[4:0] bits in the OSCCON1 register to switch the system clock source

See **Section 9.3 "Clock Switching"** for more information.

9.2.1.1 EC Mode

The External Clock (EC) mode allows an externally generated logic level signal to be the system clock source. When operating in this mode, an external clock source is connected to the OSC1 input. OSC2/CLKOUT is available for general purpose I/O or CLKOUT. Figure 9-2 shows the pin connections for EC mode.

EC mode has three Power modes to select from through Configuration Words:

- ECH – High Power, ≤ 32 MHz
- ECM – Medium Power, ≤ 8 MHz
- ECL – Low Power, ≤ 0.5 MHz

The Oscillator Start-up Timer (OST) is disabled when EC mode is selected. Therefore, there is no delay in operation after a Power-on Reset (POR) or wake-up from Sleep. Because the PIC® MCU design is fully static, stopping the external clock input will have the effect of halting the device while leaving all data intact. Upon restarting the external clock, the device will resume operation as if no time had elapsed.

FIGURE 9-2: EXTERNAL CLOCK (EC) MODE OPERATION

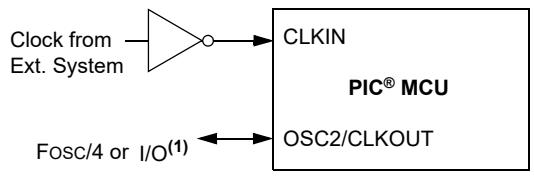

Note 1: Output depends upon $\overline{\text{CLKOUTEN}}$ bit of the Configuration Words.

9.2.1.2 LP, XT, HS Modes

The LP, XT and HS modes support the use of quartz crystal resonators or ceramic resonators connected to OSC1 and OSC2 (Figure 9-3). The three modes select a low, medium or high gain setting of the internal inverter-amplifier to support various resonator types and speed.

LP Oscillator mode selects the lowest gain setting of the internal inverter-amplifier. LP mode current consumption is the least of the three modes. This mode is designed to drive only 32.768 kHz tuning-fork type crystals (watch crystals).

XT Oscillator mode selects the intermediate gain setting of the internal inverter-amplifier. XT mode current consumption is the medium of the three modes. This mode is best suited to drive crystals and resonators with a medium drive level specification.

HS Oscillator mode selects the highest gain setting of the internal inverter-amplifier. HS mode current consumption is the highest of the three modes. This mode is best suited for resonators that require a high drive setting.

Figure 9-3 and Figure 9-4 show typical circuits for quartz crystal and ceramic resonators, respectively.

FIGURE 9-3: QUARTZ CRYSTAL OPERATION (LP, XT OR HS MODE)

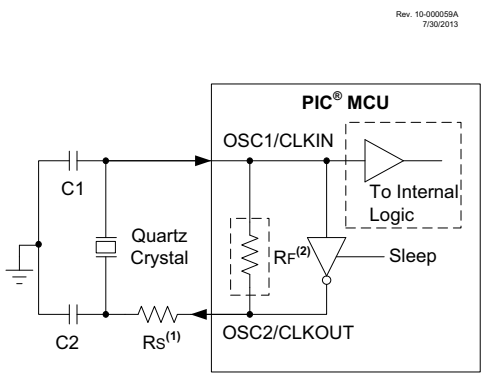

Note 1: A series resistor (Rs) may be required for quartz crystals with low drive level.

2: The value of RF varies with the Oscillator mode selected (typically between 2 MΩ and 10 MΩ).

Note 1: Quartz crystal characteristics vary according to type, package and manufacturer. The user needs to consult the manufacturer data sheets for specifications and recommended application.

2: Always verify oscillator performance over the VDD and temperature range that is expected for the application.

3: For oscillator design assistance, reference the following Microchip Application Notes:

- AN826, "*Crystal Oscillator Basics and Crystal Selection for rfPIC® and PIC® Devices*" (DS00826)
- AN849, "*Basic PIC® Oscillator Design*" (DS00849)
- AN943, "*Practical PIC® Oscillator Analysis and Design*" (DS00943)
- AN949, "*Making Your Oscillator Work*" (DS00949)

FIGURE 9-4: CERAMIC RESONATOR OPERATION (XT OR HS MODE)

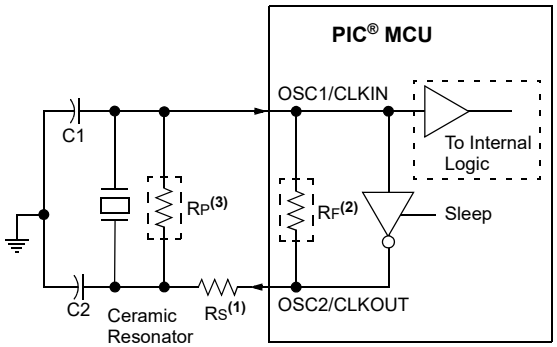

Note 1: A series resistor (RS) may be required for ceramic resonators with low drive level.

2: The value of RF varies with the Oscillator mode selected (typically between 2 MΩ to 10 MΩ).

3: An additional parallel feedback resistor (RP) may be required for proper ceramic resonator operation.

9.2.1.3 Oscillator Start-up Timer (OST)

If the oscillator module is configured for LP, XT or HS modes, the Oscillator Start-up Timer (OST) counts 1024 oscillations from OSC1. This occurs following a Power-on Reset (POR), Brown-out Reset (BOR) or a wake-up from Sleep. The OST ensures that the oscillator circuit, using a quartz crystal resonator or ceramic resonator, has started and is providing a stable system clock to the oscillator module.

9.2.1.4 4x PLL

The oscillator module contains a PLL that can be used with external clock sources and internal oscillator to provide a system clock source. The input frequency for the PLL must fall within specifications. See the PLL Clock Timing Specifications in Table 37-9.

The PLL may be enabled for use by one of two methods:

1. Program the RSTOSC bits in the Configuration Word 1 to enable the EXTOSC with 4x PLL.
2. Write the NOSC bits in the OSCCON1 register to enable the EXTOSC with 4x PLL.

Note 1: Quartz crystal characteristics vary according to type, package and manufacturer. The user needs to consult the manufacturer data sheets for specifications and recommended application.

2: Always verify oscillator performance over the VDD and temperature range that is expected for the application.

3: For oscillator design assistance, reference the following Microchip Application Notes:

- AN826, "*Crystal Oscillator Basics and Crystal Selection for rfPIC® and PIC® Devices*" (DS00826)
- AN849, "*Basic PIC® Oscillator Design*" (DS00849)
- AN943, "*Practical PIC® Oscillator Analysis and Design*" (DS00943)
- AN949, "*Making Your Oscillator Work*" (DS00949)
- TB097, "*Interfacing a Micro Crystal MS1V-T1K 32.768 kHz Tuning Fork Crystal to a PIC16F690/SS*" (DS91097)
- AN1288, "*Design Practices for Low-Power External Oscillators*" (DS01288)

9.2.2 INTERNAL CLOCK SOURCES

The device may be configured to use an internal oscillator block as the system clock by performing one of the following actions:

- Program the RSTOSC[2:0] bits in Configuration Words to select the INTOSC clock source, which will be used as the default system clock upon a device Reset.
- Write the NOSC[2:0] bits in the OSCCON1 register to switch the system clock source to the internal oscillator during run-time. See **Section 9.3 "Clock Switching"** for more information.

In **INTOSC** mode, CLKIN is available for general purpose I/O. CLKOUT is available for general purpose I/O or CLKOUT.

The function of the CLKOUT pin is determined by the $\overline{\text{CLKOUTEN}}$ bit in Configuration Words.

The internal oscillator block has two independent oscillators that can produce two internal system clock sources.

1. The **HFINTOSC** (High-Frequency Internal Oscillator) is factory calibrated and operates up to 32 MHz. The frequency of HFINTOSC can be selected through the OSCFRQ Frequency Selection register, and fine-tuning can be done via the OSCTUNE register.
2. The **LFINTOSC** (Low-Frequency Internal Oscillator) is factory-calibrated and operates at 31 kHz.

9.2.2.1 HFINTOSC

The High-Frequency Internal Oscillator (HFINTOSC) is a precision digitally-controlled internal clock source that produces a stable clock up to 32 MHz. The HFINTOSC can be enabled through one of the following methods:

- Programming the RSTOSC[2:0] bits in Configuration Word 1 to '110' (1 MHz) or '001' (32 MHz) to set the oscillator upon device Power-up or Reset.
- Write to the NOSC[2:0] bits of the OSCCON1 register during run-time.

The HFINTOSC frequency can be selected by setting the HFFRQ[2:0] bits of the OSCFRQ register. The MFINTOSC is an internal clock source within the HFINTOSC that provides two (500 kHz, 32 kHz) constant clock outputs. These constant clock outputs are available for selection to various peripherals, internally.

The NDIV[3:0] bits of the OSCCON1 register allow for division of the HFINTOSC output from a range between 1:1 and 1:512.

9.2.2.2 Internal Oscillator Frequency Adjustment

The internal oscillator is factory-calibrated. This internal oscillator can be adjusted in software by writing to the OSCTUNE register (Register 9-7).

The default value of the OSCTUNE register is 00h. The value is a 6-bit two's complement number. A value of 1Fh will provide an adjustment to the maximum frequency. A value of 20h will provide an adjustment to the minimum frequency.

When the OSCTUNE register is modified, the oscillator frequency will begin shifting to the new frequency. Code execution continues during this shift. There is no indication that the shift has occurred.

OSCTUNE does not affect the LFINTOSC frequency. Operation of features that depend on the LFINTOSC clock source frequency, such as the Power-up Timer (PWRT), Watchdog Timer (WDT), Fail-Safe Clock Monitor (FSCM) and peripherals, are *not* affected by the change in frequency.

9.2.2.3 LFINTOSC

The Low-Frequency Internal Oscillator (LFINTOSC) is a factory-calibrated 31 kHz internal clock source. The LFINTOSC is the clock source for the Power-up Timer (PWRT), Watchdog Timer (WDT) and Fail-Safe Clock Monitor (FSCM). The LFINTOSC can also be used as the system clock, or as a clock or input source to certain peripherals.

The LFINTOSC is selected as the clock source through one of the following methods:

- Programming the RSTOSC[2:0] bits of Configuration Word 1 to enable LFINTOSC.
- Write to the NOSC[2:0] bits of the OSCCON1 register.

9.2.2.4 Oscillator Status and Manual Enable

The 'ready' status of each oscillator is displayed in the OSCSTAT register (Register 9-4). The oscillators can also be manually enabled through the OSCEN register (Register 9-7). Manual enabling makes it possible to verify the operation of the EXTOSC oscillator. This can be achieved by enabling the selected oscillator, then watching the corresponding 'ready' state of the oscillator in the OSCSTAT register.

9.3 Clock Switching

The system clock source can be switched between external and internal clock sources via software using the New Oscillator Source (NOSC) and New Divider selection request (NDIV) bits of the OSCCON1 register.

9.3.1 NEW OSCILLATOR SOURCE (NOSC) AND NEW DIVIDER SELECTION REQUEST (NDIV) BITS

The New Oscillator Source (NOSC) and New Divider selection request (NDIV) bits of the OSCCON1 register select the system clock source and the frequency that are used for the CPU and peripherals.

When new values of NOSC and NDIV are written to OSCCON1, the current oscillator selection will continue to operate while waiting for the new clock source to indicate that it is stable and ready. In some cases, the newly requested source may already be in use, and is ready immediately. In the case of a divider-only change, the new and old sources are the same, and will be immediately ready. The device may enter Sleep while waiting for the switch as described in **Section 9.3.3 "Clock Switch and Sleep"**.

When the new oscillator is ready, the New Oscillator is Ready (NOSCR) bit of OSCCON3 and the Clock Switch Interrupt Flag (CSWIF) bit of PIR1 become set (CSWIF = 1). If Clock Switch Interrupts are enabled (CSWIE = 1), an interrupt will be generated at that time. The Oscillator Ready (ORDY) bit of OSCCON3 can also be polled to determine when the oscillator is ready in lieu of an interrupt.

If the Clock Switch Hold (CSWHOLD) bit of OSCCON3 is clear, the oscillator switch will occur when the New Oscillator is Ready (NOSCR) bit is set, and the interrupt (if enabled) will be serviced at the new oscillator setting.

If CSWHOLD is set, the oscillator switch is suspended, while execution continues using the current (old) clock source. When the NOSCR bit is set, software may:

- set CSWHOLD = 0 so the switch can complete, or
- copy COSC into NOSC to abandon the switch.

If DOZE is in effect, the switch occurs on the next clock cycle, whether or not the CPU is operating during that cycle.

Changing the clock post-divider without changing the clock source (e.g., changing FOSC from 1 MHz to 2 MHz) is handled in the same manner as a clock source change, as described previously. The clock source will already be active, so the switch is relatively quick. CSWHOLD must be clear (CSWHOLD = 0) for the switch to complete.

The current COSC and CDIV are indicated in the OSCCON2 register up to the moment when the switch actually occurs, at which time OSCCON2 is updated and ORDY is set. NOSCR is cleared by hardware to indicate that the switch is complete.

9.3.2 PLL INPUT SWITCH

Switching between the PLL and any non-PLL source is managed as described above. The input to the PLL is established when NOSC selects the PLL, and maintained by the COSC setting.

When NOSC and COSC select the PLL with different input sources, the system continues to run using the COSC setting, and the new source is enabled per NOSC. When the new oscillator is ready (and CSWHOLD = 0), system operation is suspended while the PLL input is switched and the PLL acquires lock.

Note:	If the PLL fails to lock, the FSCM will trigger.

9.3.3 CLOCK SWITCH AND SLEEP

If OSCCON1 is written with a new value and the device is put to Sleep before the switch completes, the switch will not take place and the device will enter Sleep mode.

When the device wakes from Sleep and the CSWHOLD bit is clear, the device will wake with the 'new' clock active, and the clock switch interrupt flag bit (CSWIF) will be set.

When the device wakes from Sleep and the CSWHOLD bit is set, the device will wake with the 'old' clock active and the new clock will be requested again.

© 2017-2021 Microchip Technology Inc.

FIGURE 9-5: CLOCK SWITCH (CSWHOLD = 0)

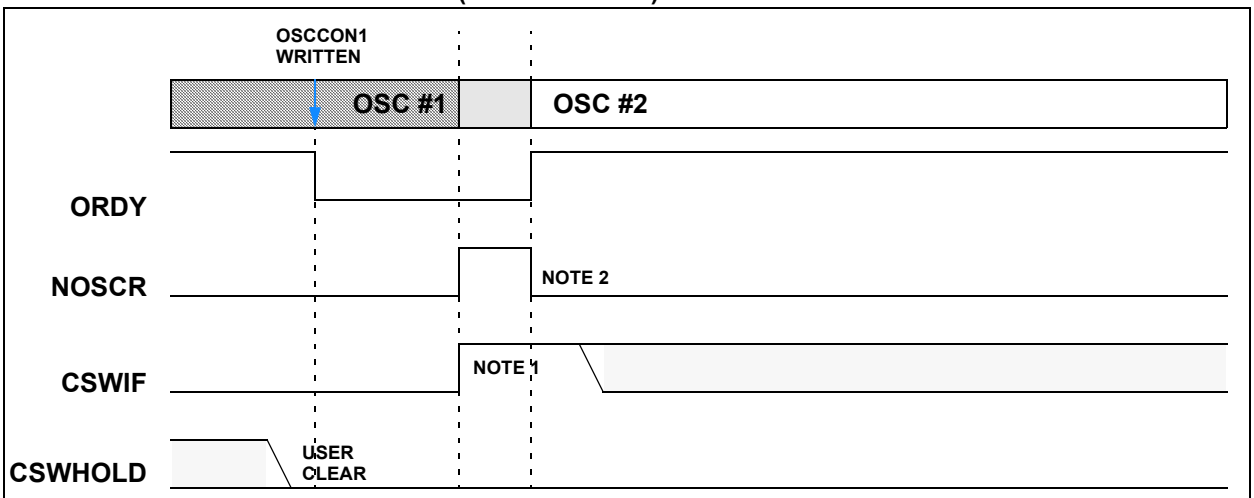

Note 1: CSWIF is asserted coincident with NOSCR; interrupt is serviced at OSC#2 speed.
2: The assertion of NOSCR is hidden from the user because it appears only for the duration of the switch.

FIGURE 9-6: CLOCK SWITCH (CSWHOLD = 1)

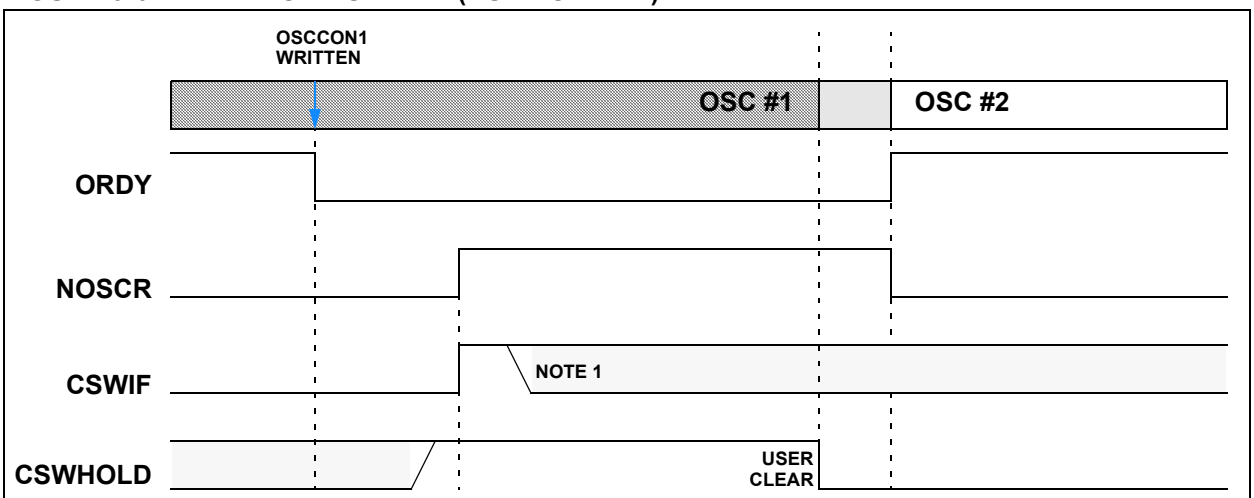

Note 1: CSWIF is asserted coincident with NOSCR, and may be cleared before or after clearing CSWHOLD = 0.

FIGURE 9-7: CLOCK SWITCH ABANDONED

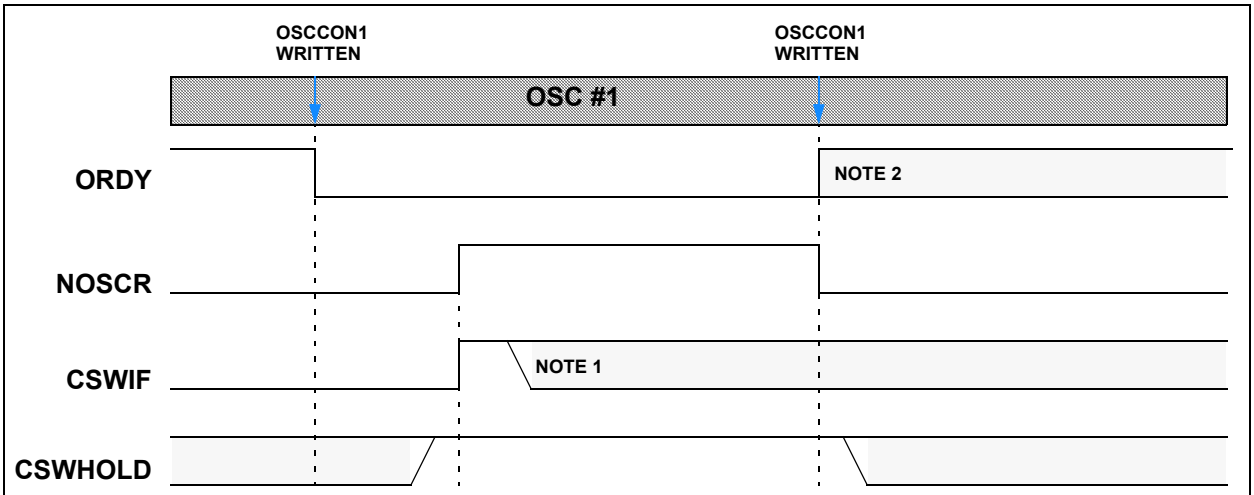

Note 1: CSWIF may be cleared before or after rewriting OSCCON1; CSWIF is not automatically cleared.
2: ORDY = 0 if OSCCON1 does not match OSCCON2; a new switch will begin.

9.4 Fail-Safe Clock Monitor

The Fail-Safe Clock Monitor (FSCM) allows the device to continue operating should the external oscillator fail. The FSCM is enabled by setting the FCMEN bit in the Configuration Words. The FSCM is applicable to all external Oscillator modes (LP, XT, HS, ECL, ECM, ECH and Secondary Oscillator).

FIGURE 9-8: FSCM BLOCK DIAGRAM

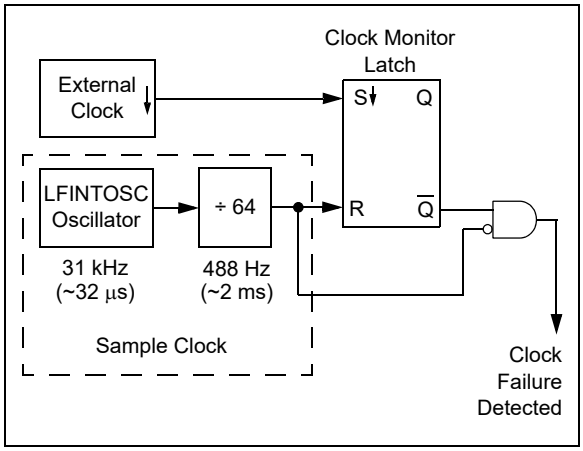

9.4.1 FAIL-SAFE DETECTION

The FSCM module detects a failed oscillator by comparing the external oscillator to the FSCM sample clock. The sample clock is generated by dividing the LFINTOSC by 64. See Figure 9-8. Inside the fail detector block is a latch. The external clock sets the latch on each falling edge of the external clock. The sample clock clears the latch on each rising edge of the sample clock. A failure is detected when an entire half-cycle of the sample clock elapses before the external clock goes low.

9.4.2 FAIL-SAFE OPERATION

When the external clock fails, the FSCM switches the device clock to the HFINTOSC at 1 MHz clock frequency and sets the bit flag OSFIF of the PIR1 register. Setting this flag will generate an interrupt if the OSFIE bit of the PIE1 register is also set. The device firmware can then take steps to mitigate the problems that may arise from a failed clock. The system clock will continue to be sourced from the internal clock source until the device firmware successfully restarts the external oscillator and switches back to external operation, by writing to the NOSC and NDIV bits of the OSCCON1 register.

9.4.3 FAIL-SAFE CONDITION CLEARING

The Fail-Safe condition is cleared after a Reset, executing a `SLEEP` instruction or changing the NOSC and NDIV bits of the OSCCON1 register. When switching to the external oscillator, or external oscillator and PLL, the OST is restarted. While the OST is running, the device continues to operate from the INTOSC selected in OSCCON1. When the OST times out, the Fail-Safe condition is cleared after successfully switching to the external clock source. The OSFIF bit must be cleared prior to switching to the external clock source. If the Fail-Safe condition still exists, the OSFIF flag will again become set by hardware.

9.4.4 RESET OR WAKE-UP FROM SLEEP

The FSCM is designed to detect an oscillator failure after the Oscillator Start-up Timer (OST) has expired. The OST is used after waking up from Sleep and after any type of Reset. The OST is not used with the EC Clock modes so that the FSCM will be active as soon as the Reset or wake-up has completed. Therefore, the device will always be executing code while the OST is operating.

FIGURE 9-9: FSCM TIMING DIAGRAM

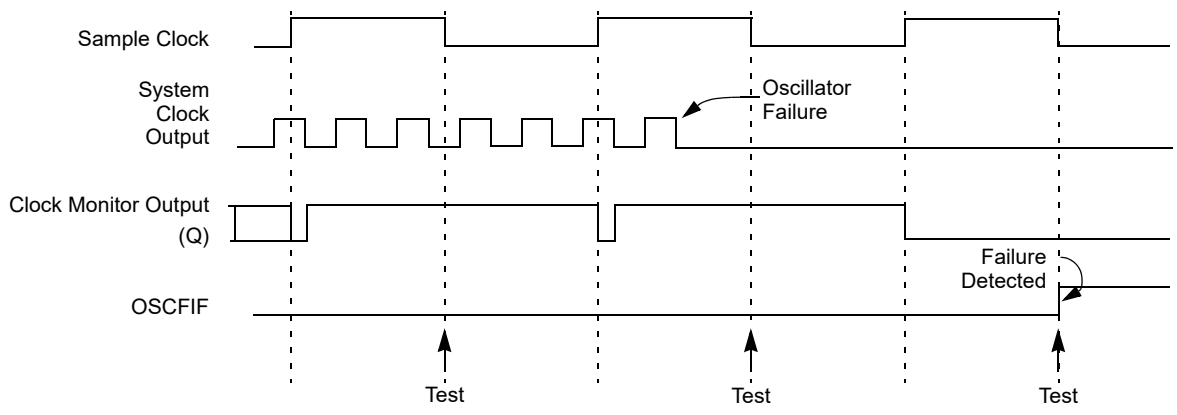

Note: The system clock is normally at a much higher frequency than the sample clock. The relative frequencies in this example have been chosen for clarity.

9.5 Register Definitions: Oscillator Control

REGISTER 9-1: OSCCON1: OSCILLATOR CONTROL REGISTER1

U-0	R/W-f/f(1)	R/W-f/f(1)	R/W-f/f(1)	R/W-q/q	R/W-q/q	R/W-q/q	R/W-q/q
—	NOSC[2:0](2,3)			NDIV[3:0](2,3,4)			
bit 7							bit 0

Legend:		
R = Readable bit	W = Writable bit	U = Unimplemented bit, read as ‘0’
u = Bit is unchanged	x = Bit is unknown	-n/n = Value at POR and BOR/Value at all other Resets
‘1’ = Bit is set	‘0’ = Bit is cleared	f = determined by fuse setting

bit 7 **Unimplemented:** Read as ‘0’

bit 6-4 **NOSC[2:0]:** New Oscillator Source Request bits
The setting requests a source oscillator and PLL combination per Table 9-1.
POR value = RSTOSC (Register 5-1).

bit 3-0 **NDIV[3:0]:** New Divider Selection Request bits
The setting determines the new postscaler division ratio per Table 9-1.

Note 1: The default value (f/f) is set equal to the RSTOSC Configuration bits.
2: If NOSC is written with a reserved value (Table 9-1), the operation is ignored and neither NOSC nor NDIV is written.
3: When CSWEN = 0, this register is read-only and cannot be changed from the POR value.
4: When NOSC = 110 (HFINTOSC 4 MHz), the NDIV bits will default to ‘0010’ upon Reset; for all other NOSC settings the NDIV bits will default to ‘0000’ upon Reset.

REGISTER 9-2: OSCCON2: OSCILLATOR CONTROL REGISTER 2

U-0	R-n/n(2)	R-n/n(2)	R-n/n(2)	R-n/n(2)	R-n/n(2)	R-n/n(2)	R-n/n(2)
—	COSC[2:0]			CDIV[3:0]			
bit 7							bit 0

Legend:		
R = Readable bit	W = Writable bit	U = Unimplemented bit, read as ‘0’
u = Bit is unchanged	x = Bit is unknown	-n/n = Value at POR and BOR/Value at all other Resets
‘1’ = Bit is set	‘0’ = Bit is cleared	

bit 7 **Unimplemented:** Read as ‘0’

bit 6-4 **COSC[2:0]:** Current Oscillator Source Select bits (read-only)
Indicates the current source oscillator and PLL combination per Table 9-1.

bit 3-0 **CDIV[3:0]:** Current Divider Select bits (read-only)
Indicates the current postscaler division ratio per Table 9-1.

Note 1: The POR value is the value present when user code execution begins.
2: The Reset value (n/n) is the same as the NOSC/NDIV bits.

TABLE 9-1: NOSC/COSC BIT SETTINGS

NOSC[2:0]/ COSC[2:0]	Clock Source
111	EXTOSC(1)
110	HFINTOSC(2)
101	LFINTOSC
100	Reserved
011	Reserved
010	EXTOSC with 4x PLL(1)
001	HFINTOSC with 2x PLL (32 MHz)(1)
000	Reserved

Note 1: EXTOSC configured by the FEXTOSC bits of Configuration Word 1 (Register 5-1).

2: HFINTOSC settings are configured with the HFFRQ bits of the OSCFRQ register (Register 9-6).

TABLE 9-2: NDIV/CDIV BIT SETTINGS

NDIV[3:0]/ CDIV[3:0]	Clock divider
1111–1010	Reserved
1001	512
1000	256
0111	128
0110	64
0101	32
0100	16
0011	8
0010	4
0001	2
0000	1

REGISTER 9-3: OSCCON3: OSCILLATOR CONTROL REGISTER 3

R/W/HC-0/0	U-0	U-0	R-0/0	R-0/0	U-0	U-0	U-0
CSWHOLD	—	—	ORDY	NOSCR	—	—	—
bit 7							bit 0

Legend:		
R = Readable bit	W = Writable bit	U = Unimplemented bit, read as ‘0’
u = Bit is unchanged	x = Bit is unknown	-n/n = Value at POR and BOR/Value at all other Resets
‘1’ = Bit is set	‘0’ = Bit is cleared	

bit 7 **CSWHOLD:** Clock Switch Hold bit
- 1 = Clock switch will hold (with interrupt) when the oscillator selected by NOSC is ready
- 0 = Clock switch may proceed when the oscillator selected by NOSC is ready; if this bit is clear at the time that NOSCR becomes ‘1’, the switch will occur

bit 6-5 **Unimplemented:** Read as ‘0’.

bit 4 **ORDY:** Oscillator Ready bit (read-only)
- 1 = OSCCON1 = OSCCON2; the current system clock is the clock specified by NOSC
- 0 = A clock switch is in progress

bit 3 **NOSCR:** New Oscillator is Ready bit (read-only)
- 1 = A clock switch is in progress and the oscillator selected by NOSC indicates a “ready” condition
- 0 = A clock switch is not in progress, or the NOSC-selected oscillator is not yet ready

bit 2-0 **Unimplemented:** Read as ‘0’

REGISTER 9-4: OSCSTAT: OSCILLATOR STATUS REGISTER 1

R-q/q	R-q/q	R-q/q	R-q/q	U-0	R-q/q	U-0	R-q/q
EXTOR	HFOR	MFOR	LFOR	—	ADOR	—	PLLR
bit 7							bit 0

Legend:		
R = Readable bit	W = Writable bit	U = Unimplemented bit, read as ‘0’
u = Bit is unchanged	x = Bit is unknown	-n/n = Value at POR and BOR/Value at all other Resets
‘1’ = Bit is set	‘0’ = Bit is cleared	

bit 7 **EXTOR:** EXTOSC (external) Oscillator Ready bit
1 = The oscillator is ready to be used
0 = The oscillator is not enabled, or is not yet ready to be used.

bit 6 **HFOR:** HFINTOSC Oscillator Ready bit
1 = The oscillator is ready to be used
0 = The oscillator is not enabled, or is not yet ready to be used.

bit 5 **MFOR:** MFINTOSC Oscillator Ready bit
1 = The oscillator is ready to be used
0 = The oscillator is not enabled, or is not yet ready to be used.

bit 4 **LFOR:** LFINTOSC Oscillator Ready bit
1 = The oscillator is ready to be used
0 = The oscillator is not enabled, or is not yet ready to be used.

bit 3 **Unimplemented:** Read as ‘0’

bit 2 **ADOR:** CRC Oscillator Ready bit
1 = The oscillator is ready to be used
0 = The oscillator is not enabled, or is not yet ready to be used.

bit 1 **Unimplemented:** Read as ‘0’

bit 0 **PLLR:** PLL is Ready bit
1 = The PLL is ready to be used
0 = The PLL is not enabled, the required input source is not ready, or the PLL is not locked.

REGISTER 9-5: OSCEN: OSCILLATOR MANUAL ENABLE REGISTER

R/W-0/0	R/W-0/0	R/W-0/0	R/W-0/0	U-0	R/W-0/0	U-0	U-0
EXTOEN	HFOEN	MFOEN	LFOEN	—	ADOEN	—	—
bit 7							bit 0

Legend:		
R = Readable bit	W = Writable bit	U = Unimplemented bit, read as ‘0’
u = Bit is unchanged	x = Bit is unknown	-n/n = Value at POR and BOR/Value at all other Resets
‘1’ = Bit is set	‘0’ = Bit is cleared	

bit 7 **EXTOEN:** External Oscillator Manual Request Enable bit[(1)]
1 = EXTOSC is explicitly enabled, operating as specified by FEXTOSC
0 = EXTOSC can be enabled by some modules

bit 6 **HFOEN:** HFINTOSC Oscillator Manual Request Enable bit
1 = HFINTOSC is explicitly enabled, operating as specified by OSCFRQ
0 = HFINTOSC can be enabled by another module

bit 5 **MFOEN:** MFINTOSC Oscillator Manual Request Enable bit
1 = MFINTOSC is explicitly enabled
0 = MFINTOSC can be enabled by another module

bit 4 **LFOEN:** LFINTOSC (31 kHz) Oscillator Manual Request Enable bit
1 = LFINTOSC is explicitly enabled
0 = LFINTOSC can be enabled by another module

bit 3 **Unimplemented:** Read as ‘0’

bit 2 **ADOEN:** FRC Oscillator Manual Request Enable bit
1 = FRC is explicitly enabled
0 = FRC can be enabled by another module

bit 1-0 **Unimplemented:** Read as ‘0’

REGISTER 9-6: OSCFRQ: HFINTOSC FREQUENCY SELECTION REGISTER

U-0	U-0	U-0	U-0	U-0	R/W-q/q	R/W-q/q	R/W-q/q
—	—	—	—	—	HFFRQ[2:0][(1)]		
bit 7							bit 0

Legend:		
R = Readable bit	W = Writable bit	U = Unimplemented bit, read as ‘0’
u = Bit is unchanged	x = Bit is unknown	-n/n = Value at POR and BOR/Value at all other Resets
‘1’ = Bit is set	‘0’ = Bit is cleared	

bit 7-3 **Unimplemented:** Read as ‘0’

bit 2-0 **HFFRQ[2:0]:** HFINTOSC Frequency Selection bits

Nominal Freq (MHz):

111 = Reserved
110 = 32
101 = 16
100 = 12
011 = 8
010 = 4
001 = 2
000 = 1

Note 1: When RSTOSC=110 (HFINTOSC 1 MHz), the HFFRQ bits will default to ‘010’ upon Reset; when RSTOSC = 000 (HFINTOSC 32 MHz), the HFFRQ bits will default to ‘110’ upon Reset.

REGISTER 9-7: OSCTUNE: HFINTOSC TUNING REGISTER

U-0	U-0	R/W-1/1	R/W-0/0	R/W-0/0	R/W-0/0	R/W-0/0	R/W-0/0
—	—	HFTUN[5:0]					
bit 7							bit 0

Legend:		
R = Readable bit	W = Writable bit	U = Unimplemented bit, read as ‘0’
u = Bit is unchanged	x = Bit is unknown	-n/n = Value at POR and BOR/Value at all other Resets
‘1’ = Bit is set	‘0’ = Bit is cleared	

bit 7-6 **Unimplemented:** Read as ‘0’.

bit 5-0 **HFTUN[5:0]:** HFINTOSC Frequency Tuning bits

```
01 1111 = Maximum frequency
01 1110 =
•••
00 0001 =
00 0000 = Center frequency. Oscillator module is running at the calibrated frequency (default value).
11 1111 =
•••
10 0001 =
10 0000 = Minimum frequency.
```

TABLE 9-3: SUMMARY OF REGISTERS ASSOCIATED WITH CLOCK SOURCES

Name	Bit 7	Bit 6	Bit 5	Bit 4	Bit 3	Bit 2	Bit 1	Bit 0	Register on Page
OSCCON1	—	NOSC[2:0]			NDIV[3:0]				114
OSCCON2	—	COSC[2:0]			CDIV[3:0]				114
OSCCON3	CWSHOLD	—	—	ORDY	NOSCR	—	—	—	115
OSCFRQ	—	—	—	—	—	HFFRQ[2:0]			118
OSCSTAT	EXTOR	HFOR	MFOR	LFOR	—	ADOR	—	PLLR	116
OSCTUNE	—	—	HFTUN[5:0]						119
OSCEN	EXTOEN	HFOEN	MFOEN	LFOEN	—	ADOEN	—	—	117

Legend: — = unimplemented location, read as ‘0’. Shaded cells are not used by clock sources.

TABLE 9-4: SUMMARY OF CONFIGURATION WORD WITH CLOCK SOURCES

Name	Bits	Bit -/7	Bit -/6	Bit 13/5	Bit 12/4	Bit 11/3	Bit 10/2	Bit 9/1	Bit 8/0	Register on Page
CONFIG1	13:8	—	—	FCMEN	—	CSWEN	—	—	$\overline{\text{CLKOUTEN}}$	80
	7:0	—	RSTOSC[2:0]			—	FEXTOSC[2:0]			

Legend: — = unimplemented location, read as ‘0’. Shaded cells are not used by clock sources.

10.0 INTERRUPTS

The interrupt feature allows certain events to preempt normal program flow. Firmware is used to determine the source of the interrupt and act accordingly. Some interrupts can be configured to wake the MCU from Sleep mode.

This chapter contains the following information for Interrupts:

- Operation
- Interrupt Latency
- Interrupts During Sleep
- INT Pin
- Automatic Context Saving

Many peripherals produce interrupts. Refer to the corresponding chapters for details.

A block diagram of the interrupt logic is shown in Figure 10-1.

FIGURE 10-1: INTERRUPT LOGIC

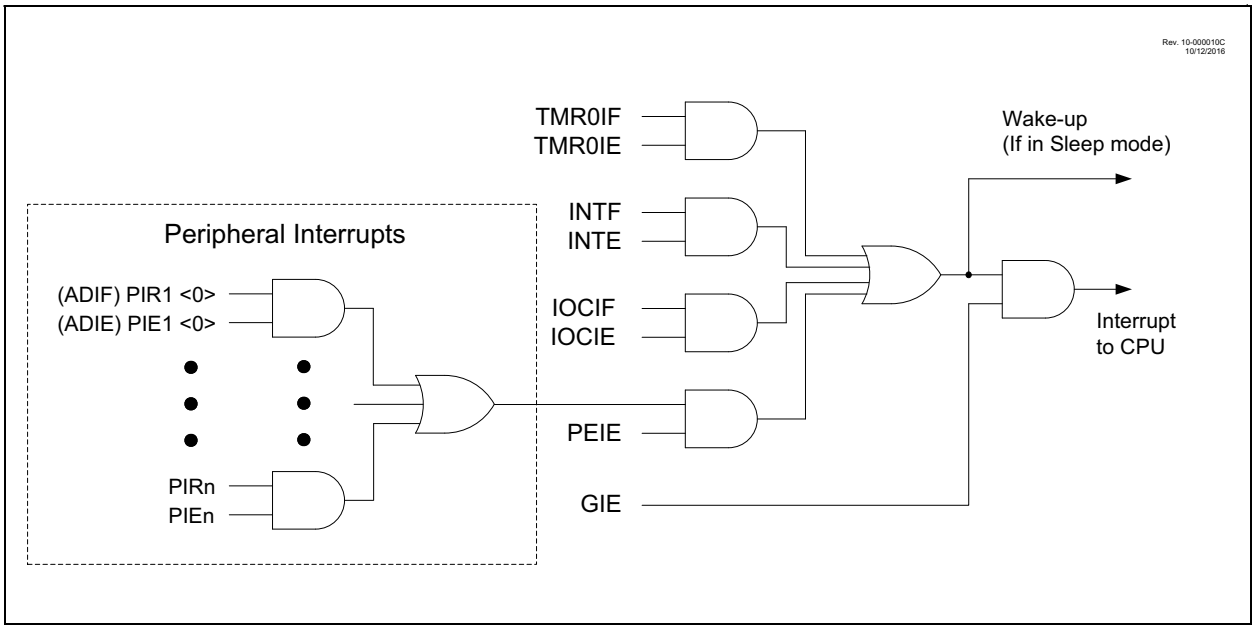

10.1 Operation

Interrupts are disabled upon any device Reset. They are enabled by setting the following bits:

- GIE bit of the INTCON register
- Interrupt Enable bit(s) of the PIEx[y] registers for the specific interrupt event(s)
- PEIE bit of the INTCON register (if the Interrupt Enable bit of the interrupt event is contained in the PIEx registers)

The PIR1, PIR2, PIR3, PIR4, PIR5, PIR6, and PIR7 registers record individual interrupts via interrupt flag bits. Interrupt flag bits will be set, regardless of the status of the GIE, PEIE and individual interrupt enable bits.

The following events happen when an interrupt event occurs while the GIE bit is set:

- Current prefetched instruction is flushed
- GIE bit is cleared
- Current Program Counter (PC) is pushed onto the stack
- Critical registers are automatically saved to the shadow registers (See **Section 10.5 "Automatic Context Saving"**)
- PC is loaded with the interrupt vector 0004h

The firmware within the Interrupt Service Routine (ISR) may determine the source of the interrupt by polling the interrupt flag bits. The interrupt flag bits must be cleared before exiting the ISR to avoid repeated interrupts. Because the GIE bit is cleared, any interrupt that occurs while executing the ISR will be recorded through its interrupt flag, but will not cause the processor to redirect to the interrupt vector.

The `RETFIE` instruction exits the ISR by popping the previous address from the stack, restoring the saved context from the shadow registers and setting the GIE bit.

For additional information on a specific interrupts operation, refer to its peripheral chapter.

Note 1:	Individual interrupt flag bits are set, regardless of the state of any other enable bits.
2:	All interrupts will be ignored while the GIE bit is cleared. Any interrupt occurring while the GIE bit is clear will be serviced when the GIE bit is set again.

10.2 Interrupt Latency

Interrupt latency is defined as the time from when the interrupt event occurs to the time code execution at the interrupt vector begins. The interrupt is sampled during Q1 of the instruction cycle. The actual interrupt latency then depends on the instruction that is executing at the time the interrupt is detected. See Figure 10-2 and Figure 10-3 for more details.

FIGURE 10-2: INTERRUPT LATENCY

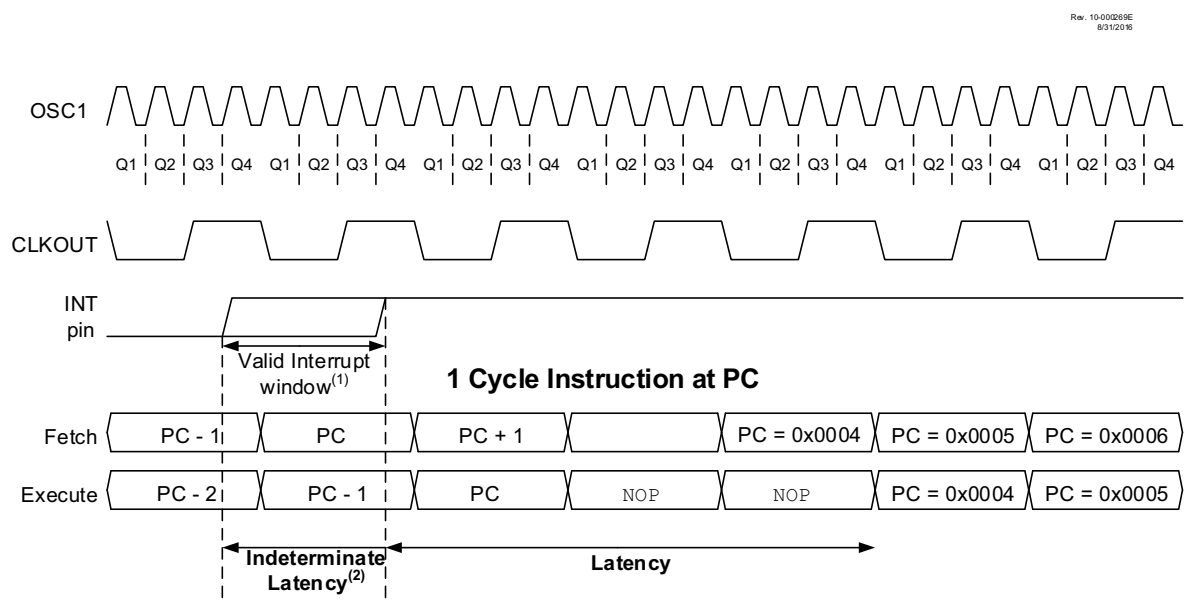

Note 1: An interrupt may occur at any time during the interrupt window.
2: Since an interrupt may occur any time during the interrupt window, the actual latency can vary.

FIGURE 10-3: INT PIN INTERRUPT TIMING

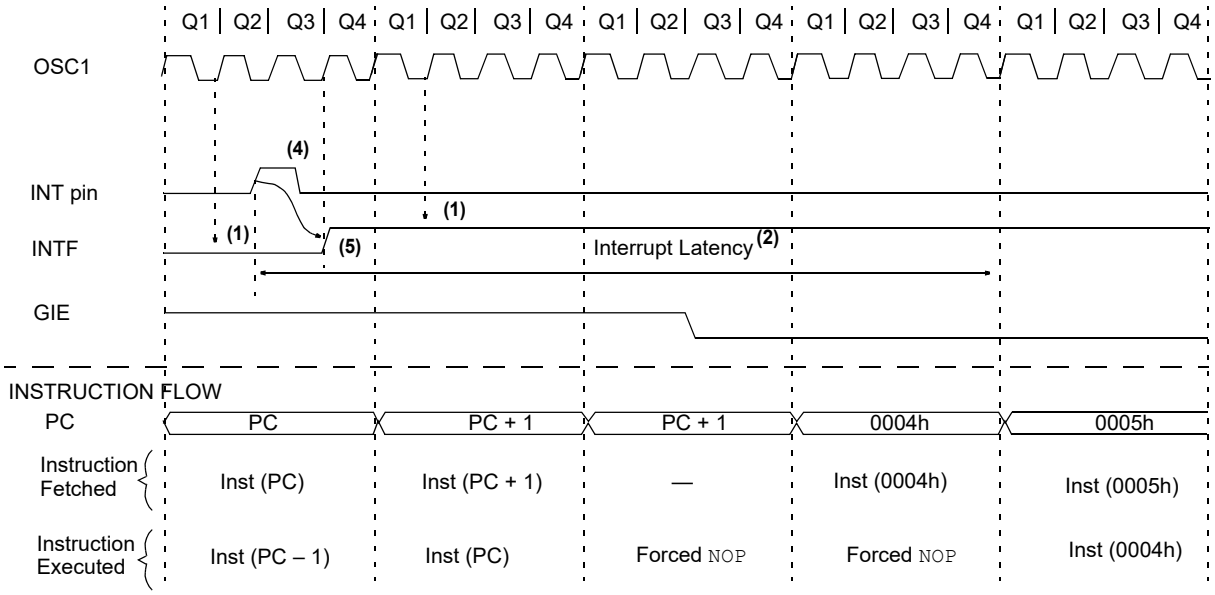

Note 1: INTF flag is sampled here (every Q1).

2: Asynchronous interrupt latency = 3-5 TCY. Synchronous latency = 3-4 TCY, where TCY = instruction cycle time. Latency is the same whether Inst (PC) is a single cycle or a two-cycle instruction.

3: For minimum width of INT pulse, refer to AC specifications in **Section 37.0 "Electrical Specifications"**.

4: INTF may be set any time during the Q4-Q1 cycles.

10.3 Interrupts During Sleep

Interrupts can be used to wake from Sleep. To wake from Sleep, the peripheral must be able to operate without the system clock. The interrupt source must have the appropriate Interrupt Enable bit(s) set prior to entering Sleep.

On waking from Sleep, if the GIE bit is also set, the processor will branch to the interrupt vector. Otherwise, the processor will continue executing instructions after the `SLEEP` instruction. The instruction directly after the `SLEEP` instruction will always be executed before branching to the ISR. Refer to **Section 11.0 "Power-Saving Operation Modes"** for more details.

10.4 INT Pin

The INT pin can be used to generate an asynchronous edge-triggered interrupt. Refer to Figure 10-3. This interrupt is enabled by setting the INTE bit of the PIE0 register. The INTEDG bit of the INTCON register determines on which edge the interrupt will occur. When the INTEDG bit is set, the rising edge will cause the interrupt. When the INTEDG bit is clear, the falling edge will cause the interrupt. The INTF bit of the PIR0 register will be set when a valid edge appears on the INT pin. If the GIE and INTE bits are also set, the processor will redirect program execution to the interrupt vector.

10.5 Automatic Context Saving

Upon entering an interrupt, the return PC address is saved on the stack. Additionally, the following registers are automatically saved in the shadow registers:

- W register
- STATUS register (except for $\overline{TO}$ and $\overline{PD}$)
- BSR register
- FSR registers
- PCLATH register

Upon exiting the Interrupt Service Routine, these registers are automatically restored. Any modifications to these registers during the ISR will be lost. If modifications to any of these registers are desired, the corresponding shadow register may be modified and the value will be restored when exiting the ISR. The shadow registers are available in Bank 31 and are readable and writable. Depending on the user's application, other registers may also need to be saved.

© 2017-2021 Microchip Technology Inc.

10.6 Register Definitions: Interrupt Control

REGISTER 10-1: INTCON: INTERRUPT CONTROL REGISTER

R/W-0/0	R/W-0/0	U-0	U-0	U-0	U-0	U-0	R/W-1/1
GIE	PEIE	—	—	—	—	—	INTEDG
bit 7							bit 0

Legend:		
R = Readable bit	W = Writable bit	U = Unimplemented bit, read as ‘0’
u = Bit is unchanged	x = Bit is unknown	-n/n = Value at POR and BOR/Value at all other Resets
‘1’ = Bit is set	‘0’ = Bit is cleared	

bit 7 **GIE:** Global Interrupt Enable bit
1 = Enables all active interrupts
0 = Disables all interrupts

bit 6 **PEIE:** Peripheral Interrupt Enable bit
1 = Enables all active peripheral interrupts
0 = Disables all peripheral interrupts

bit 5-1 **Unimplemented:** Read as ‘0’

bit 0 **INTEDG:** Interrupt Edge Select bit
1 = Interrupt on rising edge of INT pin
0 = Interrupt on falling edge of INT pin

Note: Interrupt flag bits are set when an interrupt condition occurs, regardless of the state of its corresponding enable bit or the Global Enable (GIE) bit of the INTCON register. User software must ensure the appropriate interrupt flag bits are clear prior to enabling an interrupt.

REGISTER 10-2: PIE0: PERIPHERAL INTERRUPT ENABLE REGISTER 0

U-0	U-0	R/W-0/0	R/W-0/0	U-0	U-0	U-0	R/W-0/0
—	—	TMR0IE	IOCIE	—	—	—	INTE
bit 7							bit 0

Legend:		
R = Readable bit	W = Writable bit	U = Unimplemented bit, read as ‘0’
u = Bit is unchanged	x = Bit is unknown	-n/n = Value at POR and BOR/Value at all other Resets
‘1’ = Bit is set	‘0’ = Bit is cleared	HS = Hardware set

bit 7-6 **Unimplemented**: Read as ‘0’

bit 5 **TMR0IE:** Timer0 Overflow Interrupt Enable bit
1 = Enables the Timer0 interrupt
0 = Disables the Timer0 interrupt

bit 4 **IOCIE:** Interrupt-on-Change Interrupt Enable bit
1 = Enables the IOC change interrupt
0 = Disables the IOC change interrupt

bit 3-1 **Unimplemented**: Read as ‘0’

bit 0 **INTE:** INT External Interrupt Flag bit(1)
1 = Enables the INT external interrupt
0 = Disables the INT external interrupt

Note 1: The External Interrupt GPIO pin is selected by INTPPS (Register 15-1).

Note: Bit PEIE of the INTCON register must be set to enable any peripheral interrupt controlled by PIE1-PIE7. Interrupt sources controlled by the PIE0 register do not require PEIE to be set in order to allow interrupt vectoring (when GIE is set).

REGISTER 10-3: PIE1: PERIPHERAL INTERRUPT ENABLE REGISTER 1

R/W-0/0	R/W-0/0	U-0	U-0	U-0	U-0	R/W-0/0	R/W-0/0
OSFIE	CSWIE	—	—	—	—	—	ADIE
bit 7							bit 0

Legend:		
R = Readable bit	W = Writable bit	U = Unimplemented bit, read as ‘0’
u = Bit is unchanged	x = Bit is unknown	-n/n = Value at POR and BOR/Value at all other Resets
‘1’ = Bit is set	‘0’ = Bit is cleared	

bit 7 **OSFIE:** Oscillator Fail Interrupt Enable bit
1 = Enables the Oscillator Fail Interrupt
0 = Disables the Oscillator Fail Interrupt

bit 6 **CSWIE:** Clock Switch Complete Interrupt Enable bit
1 = The clock switch module interrupt is enabled
0 = The clock switch module interrupt is disabled

bit 5-1 **Unimplemented:** Read as ‘0’

bit 0 **ADIE:** Analog-to-Digital Converter (ADC) Interrupt Enable bit
1 = Enables the ADC interrupt
0 = Disables the ADC interrupt

Note: Bit PEIE of the INTCON register must be set to enable any peripheral interrupt controlled by registers PIE1-PIE7

REGISTER 10-4: PIE2: PERIPHERAL INTERRUPT ENABLE REGISTER 2

U-0	R/W-0/0	U-0	U-0	U-0	U-0	R/W-0/0	R/W-0/0
—	ZCDIE	—	—	—	—	C2IE	C1IE
bit 7							bit 0

Legend:		
R = Readable bit	W = Writable bit	U = Unimplemented bit, read as ‘0’
u = Bit is unchanged	x = Bit is unknown	-n/n = Value at POR and BOR/Value at all other Resets
‘1’ = Bit is set	‘0’ = Bit is cleared	

bit 7 **Unimplemented:** Read as ‘0’

bit 6 **ZCDIE:** Zero-Cross Detection (ZCD) Interrupt Enable bit
1 = Enables the ZCD interrupt
0 = Disables the ZCD interrupt

bit 5-2 **Unimplemented:** Read as ‘0’

bit 1 **C2IE:** Comparator C2 Interrupt Enable bit
1 = Enables the Comparator C2 interrupt
0 = Disables the Comparator C2 interrupt

bit 0 **C1IE:** Comparator C1 Interrupt Enable bit
1 = Enables the Comparator C1 interrupt
0 = Disables the Comparator C1 interrupt

Note: Bit PEIE of the INTCON register must be set to enable any peripheral interrupt controlled by registers PIE1-PIE7.

REGISTER 10-5: PIE3: PERIPHERAL INTERRUPT ENABLE REGISTER 3

R/W-0/0	R/W-0/0	R/W-0/0	R/W-0/0	U-0	U-0	R/W-0/0	R/W-0/0
RC2IE	TX2IE	RC1IE	TX1IE	—	—	BCL1IE	SSP1IE
bit 7							bit 0

Legend:		
R = Readable bit	W = Writable bit	U = Unimplemented bit, read as ‘0’
u = Bit is unchanged	x = Bit is unknown	-n/n = Value at POR and BOR/Value at all other Resets
‘1’ = Bit is set	‘0’ = Bit is cleared	

bit 7 **RC2IE:** USART Receive Interrupt Enable bit
1 = Enables the USART receive interrupt
0 = Enables the USART receive interrupt

bit 6 **TX2IE:** USART Transmit Interrupt Enable bit
1 = Enables the USART transmit interrupt
0 = Disables the USART transmit interrupt

bit 5 **RC1IE:** USART Receive Interrupt Enable bit
1 = Enables the USART receive interrupt
0 = Enables the USART receive interrupt

bit 4 **TX1IE:** USART Transmit Interrupt Enable bit
1 = Enables the USART transmit interrupt
0 = Disables the USART transmit interrupt

bit 3-2 **Unimplemented:** Read as ‘0’

bit 1 **BCL1IE:** MSSP1 Bus Collision Interrupt Enable bit
1 = MSSP bus collision interrupt enabled
0 = MSSP bus collision interrupt disabled

bit 0 **SSP1IE:** Synchronous Serial Port (MSSP1) Interrupt Enable bit
1 = Enables the MSSP interrupt
0 = Disables the MSSP interrupt

Note: Bit PEIE of the INTCON register must be set to enable any peripheral interrupt controlled by PIE1-PIE7.

REGISTER 10-6: PIE4: PERIPHERAL INTERRUPT ENABLE REGISTER 4

U-0	U-0	U-0	U-0	U-0	U-0	R/W-0/0	R/W-0/0
—	—	—	—	—	—	TMR2IE	TMR1IE
bit 7							bit 0

Legend:		
R = Readable bit	W = Writable bit	U = Unimplemented bit, read as ‘0’
u = Bit is unchanged	x = Bit is unknown	-n/n = Value at POR and BOR/Value at all other Resets
‘1’ = Bit is set	‘0’ = Bit is cleared	HS = Hardware set

bit 7-2 **Unimplemented:** Read as ‘0’

bit 1 **TMR2IE:** TMR2 to PR2 Match Interrupt Enable bit
1 = Enables the Timer2 to PR2 match interrupt
0 = Disables the Timer2 to PR2 match interrupt

bit 0 **TMR1IE:** Timer1 Overflow Interrupt Enable bit
1 = Enables the Timer1 overflow interrupt
0 = Enables the Timer1 overflow interrupt

Note: Bit PEIE of the INTCON register must be set to enable any peripheral interrupt controlled by registers PIE1-PIE7.

REGISTER 10-7: PIE5: PERIPHERAL INTERRUPT ENABLE REGISTER 5

R/W-0/0	R/W-0/0	R/W-0/0	R/W-0/0	U-0	U-0	U-0	R/W-0/0
CLC4IE	CLC3IE	CLC2IE	CLC1IE	—	—	—	TMR1GIE
bit 7							bit 0

Legend:		
R = Readable bit	W = Writable bit	U = Unimplemented bit, read as ‘0’
u = Bit is unchanged	x = Bit is unknown	-n/n = Value at POR and BOR/Value at all other Resets
‘1’ = Bit is set	‘0’ = Bit is cleared	HS = Hardware set

bit 7 **CLC4IE:** CLC4 Interrupt Enable bit
1 = CLC4 interrupt enabled
0 = CLC4 interrupt disabled

bit 6 **CLC3IE:** CLC3 Interrupt Enable bit
1 = CLC3 interrupt enabled
0 = CLC3 interrupt disabled

bit 5 **CLC2IE:** CLC2 Interrupt Enable bit
1 = CLC2 interrupt enabled
0 = CLC2 interrupt disabled

bit 4 **CLC1IE:** CLC1 Interrupt Enable bit
1 = CLC1 interrupt enabled
0 = CLC1 interrupt disabled

bit 3-1 **Unimplemented:** Read as ‘0’

bit 0 **TMR1GIE:** Timer1 Gate Interrupt Enable bit
1 = Enables the Timer1 gate acquisition interrupt
0 = Disables the Timer1 gate acquisition interrupt

Note: Bit PEIE of the INTCON register must be set to enable any peripheral interrupt controlled by registers PIE1-PIE7.

REGISTER 10-8: PIE6: PERIPHERAL INTERRUPT ENABLE REGISTER 6

U-0	U-0	U-0	U-0	U-0	U-0	R/W-0/0	R/W-0/0
—	—	—	—	—	—	CCP2IE	CCP1IE
bit 7							bit 0

Legend:		
R = Readable bit	W = Writable bit	U = Unimplemented bit, read as ‘0’
u = Bit is unchanged	x = Bit is unknown	-n/n = Value at POR and BOR/Value at all other Resets
‘1’ = Bit is set	‘0’ = Bit is cleared	HS = Hardware set

bit 7-2 **Unimplemented:** Read as ‘0’.

bit 1 **CCP2IE:** CCP2 Interrupt Enable bit
1 = CCP2 interrupt is enabled
0 = CCP2 interrupt is disabled

bit 0 **CCP1IE:** CCP1 Interrupt Enable bit
1 = CCP1 interrupt is enabled
0 = CCP1 interrupt is disabled

Note: Bit PEIE of the INTCON register must be set to enable any peripheral interrupt controlled by registers PIE1-PIE7.

REGISTER 10-9: PIE7: PERIPHERAL INTERRUPT ENABLE REGISTER 7

U-0	U-0	R/W-0/0	R/W-0/0	U-0	U-0	U-0	R/W-0/0
—	—	NVMIE	NCO1IE	—	—	—	CWG1IE
bit 7							bit 0

Legend:		
R = Readable bit	W = Writable bit	U = Unimplemented bit, read as ‘0’
u = Bit is unchanged	x = Bit is unknown	-n/n = Value at POR and BOR/Value at all other Resets
‘1’ = Bit is set	‘0’ = Bit is cleared	HS = Hardware set

bit 7-6 **Unimplemented:** Read as ‘0’.

bit 5 **NVMIE:** NVM Interrupt Enable bit
1 = NVM task complete interrupt enabled
0 = NVM interrupt not enabled

bit 4 **NCO1IE:** NCO Interrupt Enable bit
1 = NCO rollover interrupt enabled
0 = NCO rollover interrupt disabled

bit 3-1 **Unimplemented:** Read as ‘0’.

bit 0 **CWG1IE:** Complementary Waveform Generator (CWG) 2 Interrupt Enable bit
1 = CWG1 interrupt is enabled
0 = CWG1 interrupt disabled

Note: Bit PEIE of the INTCON register must be set to enable any peripheral interrupt controlled by registers PIE1-PIE7.

REGISTER 10-10: PIR0: PERIPHERAL INTERRUPT STATUS REGISTER 0

U-0	U-0	R/W/HS-0/0	R-0	U-0	U-0	U-0	R/W/HS-0/0
—	—	TMR0IF	IOCIF	—	—	—	INTF(1)
bit 7							bit 0

Legend:		
R = Readable bit	W = Writable bit	U = Unimplemented bit, read as ‘0’
u = Bit is unchanged	x = Bit is unknown	-n/n = Value at POR and BOR/Value at all other Resets
‘1’ = Bit is set	‘0’ = Bit is cleared	HS= Hardware Set

bit 7-6 **Unimplemented:** Read as ‘0’

bit 5 **TMR0IF:** Timer0 Overflow Interrupt Flag bit
- 1 = Timer0 register has overflowed (must be cleared in software)
- 0 = Timer0 register did not overflow

bit 4 **IOCIF:** Interrupt-on-Change Interrupt Flag bit (read-only)(2)
- 1 = One or more of the IOCAF-IOCEF register bits are currently set, indicating an enabled edge was detected by the IOC module.
- 0 = None of the IOCAF-IOCEF register bits are currently set

bit 3-1 **Unimplemented:** Read as ‘0’

bit 0 **INTF:** INT External Interrupt Flag bit(1)
- 1 = The INT external interrupt occurred (must be cleared in software)
- 0 = The INT external interrupt did not occur

Note 1: The External Interrupt GPIO pin is selected by INTPPS (Register 15-1).

2: The IOCIF bit is the logical OR of all the IOCAF-IOCEF flags. Therefore, to clear the IOCIF flag, application firmware must clear all of the lower level IOCAF-IOCEF register bits.

Note: Interrupt flag bits are set when an interrupt condition occurs, regardless of the state of its corresponding enable bit or the Global Enable (GIE) bit of the INTCON register. User software must ensure the appropriate interrupt flag bits are clear prior to enabling an interrupt.

REGISTER 10-11: PIR1: PERIPHERAL INTERRUPT REQUEST REGISTER 1

R/W/HS-0/0	R/W/HS-0/0	U-0	U-0	U-0	U-0	U-0	R/W/HS-0/0
OSFIF	CSWIF	—	—	—	—	—	ADIF
bit 7							bit 0

Legend:		
R = Readable bit	W = Writable bit	U = Unimplemented bit, read as ‘0’
u = Bit is unchanged	x = Bit is unknown	-n/n = Value at POR and BOR/Value at all other Resets
‘1’ = Bit is set	‘0’ = Bit is cleared	HS = Hardware set

bit 7 **OSFIF**: Oscillator Fail-Safe Interrupt Flag bit
1 = Oscillator fail-safe interrupt has occurred (must be cleared in software)
0 = No oscillator fail-safe interrupt

bit 6 **CSWIF:** Clock Switch Complete Interrupt Flag bit
1 = The clock switch module indicates an interrupt condition and is ready to complete the clock switch operation (must be cleared in software)
0 = The clock switch does not indicate an interrupt condition

bit 5-1 **Unimplemented:** Read as ‘0’

bit 0 **ADIF**: Analog-to-Digital Converter (ADC) Interrupt Flag bit
1 = An A/D conversion or complex operation has completed (must be cleared in software)
0 = An A/D conversion or complex operation is not complete

Note: Interrupt flag bits are set when an interrupt condition occurs, regardless of the state of its corresponding enable bit or the Global Enable (GIE) bit of the INTCON register. User software must ensure the appropriate interrupt flag bits are clear prior to enabling an interrupt.

REGISTER 10-12: PIR2: PERIPHERAL INTERRUPT REQUEST REGISTER 2

U-0	R/W/HS-0/0	U-0	U-0	U-0	U-0	R/W/HS-0/0	R/W/HS-0/0
—	ZCDIF	—	—	—	—	C2IF	C1IF
bit 7							bit 0

Legend:		
R = Readable bit	W = Writable bit	U = Unimplemented bit, read as ‘0’
u = Bit is unchanged	x = Bit is unknown	-n/n = Value at POR and BOR/Value at all other Resets
‘1’ = Bit is set	‘0’ = Bit is cleared	HS = Hardware set

bit 7 **Unimplemented**: Read as ‘0’

bit 6 **ZCDIF:** Zero-Cross Detect (ZCD1) Interrupt Flag bit
1 = An enabled rising and/or falling ZCD1 event has been detected (must be cleared in software)
0 = No ZCD1 event has occurred

bit 5-2 **Unimplemented**: Read as ‘0’

bit 1 **C2IF**: Comparator C2 Interrupt Flag bit
1 = Comparator 2 interrupt asserted (must be cleared in software)
0 = Comparator 2 interrupt not asserted

bit 0 **C1IF:** Comparator C1 Interrupt Flag bit
1 = Comparator 1 interrupt asserted (must be cleared in software)
0 = Comparator 1 interrupt not asserted

Note: Interrupt flag bits are set when an interrupt condition occurs, regardless of the state of its corresponding enable bit or the Global Enable (GIE) bit of the INTCON register. User software must ensure the appropriate interrupt flag bits are clear prior to enabling an interrupt.

REGISTER 10-13: PIR3: PERIPHERAL INTERRUPT REQUEST REGISTER 3

R/W/HS-0/0	R/W/HS-0/0	R/W/HS-0/0	R/W/HS-0/0	U-0	U-0	R/W/HS-0/0	R/W/HS-0/0
RC2IF	TX2IF	RC1IF	TX1IF	—	—	BCL1IF	SSP1IF
bit 7							bit 0

Legend:		
R = Readable bit	W = Writable bit	U = Unimplemented bit, read as ‘0’
u = Bit is unchanged	x = Bit is unknown	-n/n = Value at POR and BOR/Value at all other Resets
‘1’ = Bit is set	‘0’ = Bit is cleared	HS = Hardware clearable

bit 7 **RC2IF:** EUSART2 Receive Interrupt Flag (Read-Only) bit(1)
1 = The EUSART2 receive buffer is not empty (contains at least one byte)
0 = The EUSART2 receive buffer is empty

bit 6 **TX2IF:** EUSART2 Transmit Interrupt Flag (Read-Only) bit(2)
1 = The EUSART2 transmit buffer contains at least one unoccupied space
0 = The EUSART2 transmit buffer is currently full. The application firmware must not write to TXxREG

bit 5 **RC1IF:** EUSART1 Receive Interrupt Flag (read-only) bit (1)
1 = The EUSART1 receive buffer is not empty (contains at least one byte)
0 = The EUSART1 receive buffer is empty

bit 4 **TX1IF:** EUSART1 Transmit Interrupt Flag (read-only) bit(2)
1 = The EUSART1 transmit buffer contains at least one unoccupied space
0 = The EUSART1 transmit buffer is currently full. The application firmware must not write to TXxREG again, until more room becomes available in the transmit buffer.

bit 3-2 **Unimplemented**: Read as ‘0’

bit 1 **BCL1IF:** MSSP1 Bus Collision Interrupt Flag bit
1 = A bus collision was detected (must be cleared in software)
0 = No bus collision was detected

bit 0 **SSP1IF:** Synchronous Serial Port (MSSP1) Interrupt Flag bit
1 = The Transmission/Reception/Bus Condition is complete (must be cleared in software)
0 = Waiting for the Transmission/Reception/Bus Condition in progress

Note 1: The RCxIF flag is a read-only bit. To clear the RCxIF flag, the firmware must read from RCxREG enough times to remove all bytes from the receive buffer.

2: The TXxIF flag is a read-only bit, indicating if there is room in the transmit buffer. To clear the TX1IF flag, the firmware must write enough data to TXxREG to completely fill all available bytes in the buffer. The TXxIF flag does not indicate transmit completion (use TRMT for this purpose instead).

Note: Interrupt flag bits are set when an interrupt condition occurs, regardless of the state of its corresponding enable bit or the Global Enable (GIE) bit of the INTCON register. User software must ensure the appropriate interrupt flag bits are clear prior to enabling an interrupt.

REGISTER 10-14: PIR4: PERIPHERAL INTERRUPT REQUEST REGISTER 4

U-0	U-0	U-0	U-0	U-0	U-0	R/W/HS-0/0	R/W/HS-0/0
—	—	—	—	—	—	TMR2IF	TMR1IF
bit 7							bit 0

Legend:		
R = Readable bit	W = Writable bit	U = Unimplemented bit, read as ‘0’
u = Bit is unchanged	x = Bit is unknown	-n/n = Value at POR and BOR/Value at all other Resets
‘1’ = Bit is set	‘0’ = Bit is cleared	HS = Hardware set

bit 7-2 **Unimplemented:** Read as ‘0’

bit 1 **TRM2IF:** Timer2 Interrupt Flag bit
1 = The TMR2 postscaler overflowed, or in 1:1 mode, a TMR2 to PR2 match occurred (must be cleared in software)
0 = No TMR2 event has occurred

bit 0 **TRM1IF:** Timer1 Overflow Interrupt Flag bit
1 = Timer1 overflow occurred (must be cleared in software)
0 = No Timer1 overflow occurred

Note: Interrupt flag bits are set when an interrupt condition occurs, regardless of the state of its corresponding enable bit or the Global Enable (GIE) bit of the INTCON register. User software must ensure the appropriate interrupt flag bits are clear prior to enabling an interrupt.

REGISTER 10-15: PIR5: PERIPHERAL INTERRUPT REQUEST REGISTER 5

R/W/HS-0/0	R/W/HS-0/0	R/W/HS-0/0	R/W/HS-0/0	U-0	U-0	U-0	R/W/HS-0/0
CLC4IF	CLC3IF	CLC2IF	CLC1IF	—	—	—	TMR1GIF
bit 7							bit 0

Legend:		
R = Readable bit	W = Writable bit	U = Unimplemented bit, read as ‘0’
u = Bit is unchanged	x = Bit is unknown	-n/n = Value at POR and BOR/Value at all other Resets
‘1’ = Bit is set	‘0’ = Bit is cleared	HS = Hardware set

bit 7 **CLC4IF:** CLC4 Interrupt Flag bit
1 = A CLC4OUT interrupt condition has occurred (must be cleared in software)
0 = No CLC4 interrupt event has occurred

bit 6 **CLC3IF:** CLC3 Interrupt Flag bit
1 = A CLC3OUT interrupt condition has occurred (must be cleared in software)
0 = No CLC3 interrupt event has occurred

bit 5 **CLC2IF:** CLC2 Interrupt Flag bit
1 = A CLC2OUT interrupt condition has occurred (must be cleared in software)
0 = No CLC2 interrupt event has occurred

bit 4 **CLC1IF:** CLC1 Interrupt Flag bit
1 = A CLC1OUT interrupt condition has occurred (must be cleared in software)
0 = No CLC1 interrupt event has occurred

bit 3-1 **Unimplemented:** Read as ‘0’

bit 0 **TMR1GIF:** Timer1 Gate Interrupt Flag bit
1 = The Timer1 Gate has gone inactive (the acquisition is complete)
0 = The Timer1 Gate has not gone inactive

Note: Interrupt flag bits are set when an interrupt condition occurs, regardless of the state of its corresponding enable bit or the Global Enable (GIE) bit of the INTCON register. User software must ensure the appropriate interrupt flag bits are clear prior to enabling an interrupt.

REGISTER 10-16: PIR6: PERIPHERAL INTERRUPT REQUEST REGISTER 6

U-0	U-0	U-0	U-0	U-0	U-0	R/W/HS-0/0	R/W/HS-0/0
—	—	—	—	—	—	CCP2IF	CCP1IF
bit 7							bit 0

Legend:		
R = Readable bit	W = Writable bit	U = Unimplemented bit, read as ‘0’
u = Bit is unchanged	x = Bit is unknown	-n/n = Value at POR and BOR/Value at all other Resets
‘1’ = Bit is set	‘0’ = Bit is cleared	HS = Hardware set

bit 7-2 **Unimplemented:** Read as ‘0’

bit 1 **CCP2IF:** CCP2 Interrupt Flag bit

Value	CCPM Mode		
	Capture	**Compare**	**PWM**
1	Capture occurred (must be cleared in software)	Compare match occurred (must be cleared in software)	Output trailing edge occurred (must be cleared in software)
0	Capture did not occur	Compare match did not occur	Output trailing edge did not occur

bit 0 **CCP1IF:** CCP1 Interrupt Flag bit

Value	CCPM Mode		
	Capture	**Compare**	**PWM**
1	Capture occurred (must be cleared in software)	Compare match occurred (must be cleared in software)	Output trailing edge occurred (must be cleared in software)
0	Capture did not occur	Compare match did not occur	Output trailing edge did not occur

Note: Interrupt flag bits are set when an interrupt condition occurs, regardless of the state of its corresponding enable bit or the Global Enable (GIE) bit of the INTCON register. User software must ensure the appropriate interrupt flag bits are clear prior to enabling an interrupt.

REGISTER 10-17: PIR7: PERIPHERAL INTERRUPT REQUEST REGISTER 7

U-0	U-0	R/W/HS-0/0	R/W/HS-0/0	U-0	U-0	U-0	R/W/HS-0/0
—	—	NVMIF	NCO1IF	—	—	—	CWG1IF
bit 7							bit 0

Legend:		
R = Readable bit	W = Writable bit	U = Unimplemented bit, read as ‘0’
u = Bit is unchanged	x = Bit is unknown	-n/n = Value at POR and BOR/Value at all other Resets
‘1’ = Bit is set	‘0’ = Bit is cleared	HS = Hardware set

bit 7-6 **Unimplemented:** Read as ‘0’

bit 5 **NVMIF:** Nonvolatile Memory (NVM) Interrupt Flag bit
1 = The requested NVM operation has completed
0 = NVM interrupt not asserted

bit 4 **NCO1IF:** Numerically Controlled Oscillator (NCO) Interrupt Flag bit
1 = The NCO has rolled over
0 = No NCO interrupt event has occurred

bit 3-1 **Unimplemented:** Read as ‘0’

bit 0 **CWG1IF:** CWG1 Interrupt Flag bit
1 = CWG1 has gone into shutdown
0 = CWG1 is operating normally, or interrupt cleared

Note: Interrupt flag bits are set when an interrupt condition occurs, regardless of the state of its corresponding enable bit or the Global Enable (GIE) bit of the INTCON register. User software must ensure the appropriate interrupt flag bits are clear prior to enabling an interrupt.

TABLE 10-1: SUMMARY OF REGISTERS ASSOCIATED WITH INTERRUPTS

Name	Bit 7	Bit 6	Bit 5	Bit 4	Bit 3	Bit 2	Bit 1	Bit 0	Register on Page
INTCON	GIE	PEIE	—	—	—	—	—	INTEDG	125
PIE0	—	—	TMR0IE	IOCIE	—	—	—	INTE	126
PIE1	OSFIE	CSWIE	—	—	—	—	—	ADIE	127
PIE2	—	ZCDIE	—	—	—	—	C2IE	C1IE	128
PIE3	RC2IE	TX2IE	RC1IE	TX1IE	—	—	BCL1IE	SSP1IE	129
PIE4	—	—	—	—	—	—	TMR2IE	TMR1IE	130
PIE5	CLC4IE	CLC3IE	CLC2IE	CLC1IE	—	—	—	TMR1GIE	131
PIE6	—	—	—	—	—	—	CCP2IE	CCP1IE	132
PIE7	—	—	NVMIE	NCO1IE	—	—	—	CWG1IE	133
PIR0	—	—	TMR0IF	IOCIF	—	—	—	INTF	134
PIR1	OSFIF	CSWIF	—	—	—	—	—	ADIF	135
PIR2	—	ZCDIF	—	—	—	—	C2IF	C1IF	136
PIR3	RC2IF	TX2IF	RC1IF	TX1IF	—	—	BCL1IF	SSP1IF	137
PIR4	—	—	—	—	—	—	TMR2IF	TMR1IF	138
PIR5	CLC4IF	CLC3IF	CLC2IF	CLC1IF	—	—	—	TMR1GIF	139
PIR6	—	—	—	—	—	—	CCP2IF	CCP1IF	140
PIR7	—	—	NVMIF	NCO1IF	—	—	—	CWG1IF	141

Legend: — = unimplemented location, read as ‘0’. Shaded cells are not used by interrupts.

11.0 POWER-SAVING OPERATION MODES

The purpose of the Power-Down modes is to reduce power consumption. There are three Power-Down modes: Doze mode, Idle mode, and Sleep mode.

11.1 Doze Mode

Doze mode allows for power saving by reducing CPU operation and program memory (PFM) access, without affecting peripheral operation. Doze mode differs from Sleep mode because the system oscillators continue to operate, while only the CPU and PFM are affected. The reduced execution saves power by eliminating unnecessary operations within the CPU and memory.

When the Doze Enable (DOZEN) bit is set (DOZEN = `1`), the CPU executes only one instruction cycle out of every N cycles as defined by the DOZE[2:0] bits of the CPUDOZE register. For example, if DOZE[2:0] = `100`, the instruction cycle ratio is 1:32. The CPU and memory execute for one instruction cycle and then lay Idle for 31 instruction cycles. During the unused cycles, the peripherals continue to operate at the system clock speed.

FIGURE 11-1: DOZE MODE OPERATION EXAMPLE

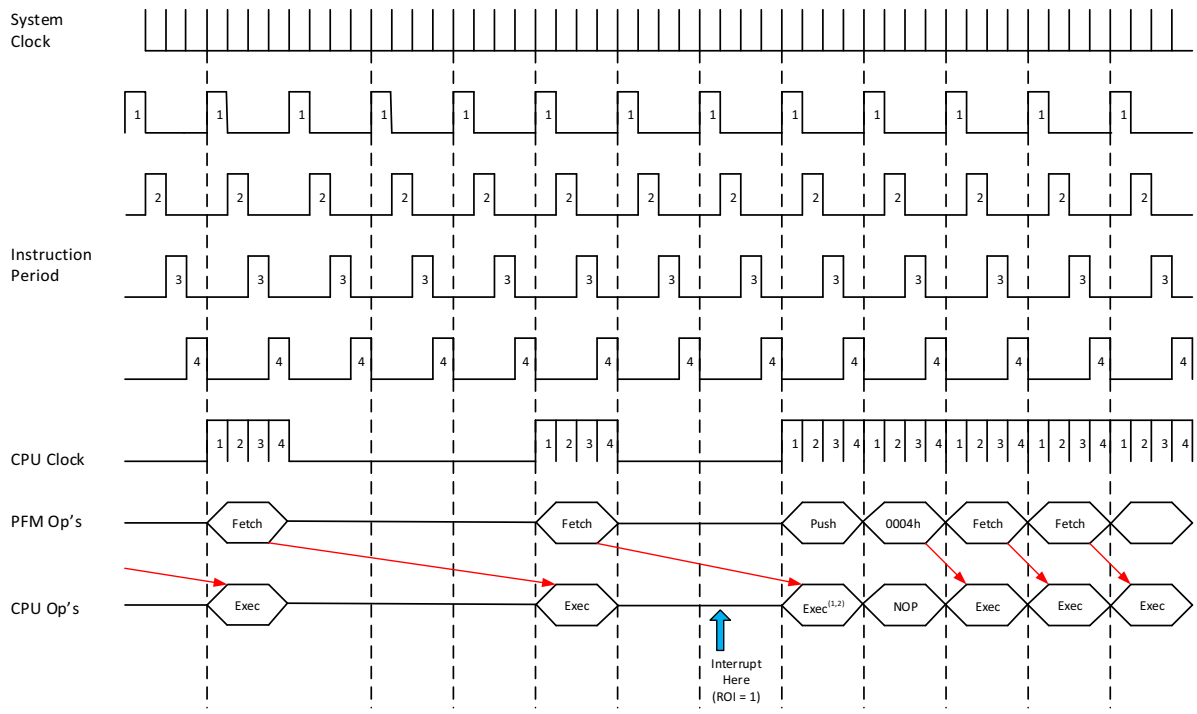

Note 1: Multi-cycle instructions are executed to completion before fetching 0004h.
2: If the pre-fetched instruction clears GIE, the ISR will not occur, but DOZEN is still cleared and the CPU will resume execution at full speed.

11.1.1 DOZE OPERATION

The Doze operation is illustrated in Figure 11-1. For this example:

- Doze enable (DOZEN) bit set (DOZEN = `1`)
- DOZE[2:0] = `001` (1:4) ratio
- Recover-on-Interrupt (ROI) bit set (ROI = `1`)

As with normal operation, the PFM fetches for the next instruction cycle. The Q-clocks to the peripherals continue throughout.

11.1.2 INTERRUPTS DURING DOZE

If an interrupt occurs and the Recover-on-Interrupt bit is clear (ROI = 0) at the time of the interrupt, the Interrupt Service Routine (ISR) continues to execute at the rate selected by DOZE[2:0]. Interrupt latency is extended by the DOZE[2:0] ratio.

If an interrupt occurs and the ROI bit is set (ROI = 1) at the time of the interrupt, the DOZEN bit is cleared and the CPU executes at full speed. The prefetched instruction is executed and then the interrupt vector sequence is executed. In Figure 11-1, the interrupt occurs during the 2nd instruction cycle of the Doze period, and immediately brings the CPU out of Doze. If the Doze-On-Exit (DOE) bit is set (DOE = 1) when the RETFIE operation is executed, DOZEN is set, and the CPU executes at the reduced rate based on the DOZE[2:0] ratio.

11.2 Sleep Mode

Sleep mode is entered by executing the SLEEP instruction, while the Idle Enable (IDLEN) bit of the CPUDOZE register is clear (IDLEN = 0). If the SLEEP instruction is executed while the IDLEN bit is set (IDLEN = 1), the CPU will enter the Idle mode (**Section 11.2.3 "Low-Power Sleep Mode"**).

Upon entering Sleep mode, the following conditions exist:

1. WDT will be cleared but keeps running if enabled for operation during Sleep.
2. The $\overline{PD}$ bit of the STATUS register is cleared.
3. The $\overline{TO}$ bit of the STATUS register is set.
4. CPU Clock and System Clock.
5. 31 kHz LFINTOSC, HFINTOSC are unaffected and peripherals using them may continue operation in Sleep.
6. ADC is unaffected if the dedicated FRC oscillator is selected the conversion will be left abandoned if FOSC is selected and ADRES will have an incorrect value.
7. I/O ports maintain the status they had before Sleep was executed (driving high, low, or high-impedance). This does not apply in the case of any asynchronous peripheral which is active and may affect the I/O port value.
8. Resets other than WDT are not affected by Sleep mode.

Refer to individual chapters for more details on peripheral operation during Sleep.

To minimize current consumption, consider the following conditions:

- I/O pins must not be floating
- External circuitry sinking current from I/O pins
- Internal circuitry sourcing current from I/O pins
- Current draw from pins with internal weak pull-ups
- Modules using any oscillator

I/O pins that are high-impedance inputs may be pulled to VDD or VSS externally to avoid switching currents caused by floating inputs.

Any module with a clock source that is not FOSC can be enabled. Examples of internal circuitry that might be sourcing current include modules such as the DAC and FVR modules. See **Section 21.0 "5-Bit Digital-to-Analog Converter (DAC1) Module"**, **Section 18.0 "Fixed Voltage Reference (FVR)"** for more information on these modules.

11.2.1 WAKE-UP FROM SLEEP

The device can wake-up from Sleep through one of the following events:

1. External Reset input on $\overline{MCLR}$ pin, if enabled.
2. BOR Reset, if enabled.
3. POR Reset.
4. Watchdog Timer, if enabled.
5. Any external interrupt.
6. Interrupts by peripherals capable of running during Sleep (see individual peripheral for more information).

The first three events will cause a device Reset. The last three events are considered a continuation of program execution. To determine whether a device Reset or wake-up event occurred, refer to **Section 8.12 "Memory Execution Violation"**.

When the SLEEP instruction is being executed, the next instruction (PC + 1) is prefetched. For the device to wake-up through an interrupt event, the corresponding interrupt enable bit must be enabled. Wake-up will occur regardless of the state of the GIE bit. If the GIE bit is disabled, the device continues execution at the instruction after the SLEEP instruction. If the GIE bit is enabled, the device executes the instruction after the SLEEP instruction, the device will then call the Interrupt Service Routine. In cases where the execution of the instruction following SLEEP is not desirable, the user may have a NOP after the SLEEP instruction.

The WDT is cleared when the device wakes-up from Sleep, regardless of the source of wake-up.

11.2.2 WAKE-UP USING INTERRUPTS

When global interrupts are disabled (GIE cleared) and any interrupt source, with the exception of the clock switch interrupt, has both its interrupt enable bit and interrupt flag bit set, one of the following will occur:

- If the interrupt occurs **before** the execution of a `SLEEP` instruction
  - `SLEEP` instruction will execute as a `NOP`
  - WDT and WDT prescaler will not be cleared
  - $\overline{TO}$ bit of the STATUS register will not be set
  - $\overline{PD}$ bit of the STATUS register will not be cleared
- If the interrupt occurs **during or after** the execution of a `SLEEP` instruction
  - `SLEEP` instruction will be completely executed
  - Device will immediately wake-up from Sleep
  - WDT and WDT prescaler will be cleared
  - $\overline{TO}$ bit of the STATUS register will be set
  - $\overline{PD}$ bit of the STATUS register will be cleared

Even if the flag bits were checked before executing a `SLEEP` instruction, it may be possible for flag bits to become set before the `SLEEP` instruction completes. To determine whether a `SLEEP` instruction executed, test the $\overline{PD}$ bit. If the $\overline{PD}$ bit is set, the `SLEEP` instruction was executed as a `NOP`.

FIGURE 11-2: WAKE-UP FROM SLEEP THROUGH INTERRUPT

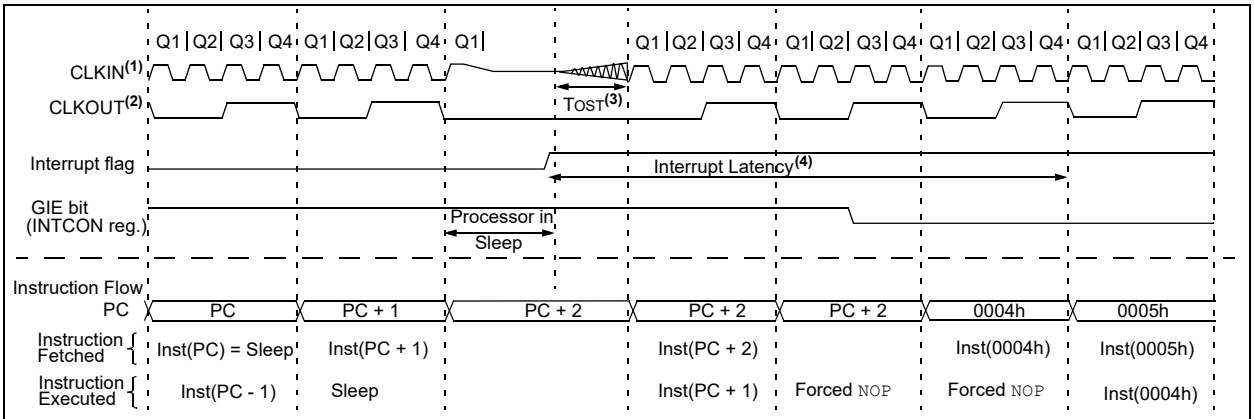

Note 1: External clock. High, Medium, Low mode assumed.
2: CLKOUT is shown here for timing reference.
3: TOST = 1024 TOSC. This delay does not apply to EC and INTOSC Oscillator modes.
4: GIE = `1` assumed. In this case after wake-up, the processor calls the ISR at 0004h. If GIE = `0`, execution will continue in-line.

11.2.3 LOW-POWER SLEEP MODE

The PIC16F15324/44 device contains an internal Low Dropout (LDO) voltage regulator, which allows the device I/O pins to operate at voltages up to 5.5V while the internal device logic operates at a lower voltage. The LDO and its associated reference circuitry must remain active when the device is in Sleep mode.

The PIC16F15324/44 allows the user to optimize the operating current in Sleep, depending on the application requirements.

Low-Power Sleep mode can be selected by setting the VREGPM bit of the VREGCON register. Depending on the configuration of these bits, the LDO and reference circuitry are placed in a low-power state when the device is in Sleep.

11.2.3.1 Sleep Current vs. Wake-up Time

In the default operating mode, the LDO and reference circuitry remain in the normal configuration while in Sleep. The device is able to exit Sleep mode quickly since all circuits remain active. In Low-Power Sleep mode, when waking-up from Sleep, an extra delay time is required for these circuits to return to the normal configuration and stabilize.

The Low-Power Sleep mode is beneficial for applications that stay in Sleep mode for long periods of time. The Normal mode is beneficial for applications that need to wake from Sleep quickly and frequently.

11.2.3.2 Peripheral Usage in Sleep

Some peripherals that can operate in Sleep mode will not operate properly with the Low-Power Sleep mode selected. The Low-Power Sleep mode is intended for use with these peripherals:

- Brown-out Reset (BOR)
- Watchdog Timer (WDT)
- External interrupt pin/interrupt-on-change pins
- Timer1 (with external clock source)

It is the responsibility of the end user to determine what is acceptable for their application when setting the VREGPM settings to ensure operation in Sleep.

Note:	The PIC16LF15324/44 does not have a configurable Low-Power Sleep mode. PIC16LF15324/44 is an unregulated device and is always in the lowest power state when in Sleep, with no wake-up time penalty. This device has a lower maximum VDD and I/O voltage than the PIC16F15324/44. See **Section 37.0 "Electrical Specifications"** for more information.

11.3 Idle Mode

When the Idle Enable (IDLEN) bit is clear (IDLEN = 0), the SLEEP instruction will put the device into full Sleep mode (see **Section 11.2 "Sleep Mode"**). When IDLEN is set (IDLEN = 1), the SLEEP instruction will put the device into Idle mode. In Idle mode, the CPU and memory operations are halted, but the peripheral clocks continue to run. This mode is similar to Doze mode, except that in Idle both the CPU and PFM are shut off.

Note:	Peripherals using FOSC will continue running while in Idle (but not in Sleep). Peripherals using HFINTOSC and LFINTOSC will continue running in both Idle and Sleep.

Note:	If CLKOUT is enabled (CLKOUT = 0, Configuration Word 1), the output will continue operating while in Idle.

11.3.1 IDLE AND INTERRUPTS

Idle mode ends when an interrupt occurs (even if GIE = 0), but IDLEN is not changed. The device can re-enter Idle by executing the SLEEP instruction.

If Recover-on-Interrupt is enabled (ROI = 1), the interrupt that brings the device out of Idle also restores full-speed CPU execution when doze is also enabled.

11.3.2 IDLE AND WDT

When in Idle, the WDT Reset is blocked and will instead wake the device. The WDT wake-up is not an interrupt, therefore ROI does not apply.

Note:	The WDT can bring the device out of Idle, in the same way it brings the device out of Sleep. The DOZEN bit is not affected.

11.4 Register Definitions: Voltage Regulator and DOZE Control

REGISTER 11-1: VREGCON: VOLTAGE REGULATOR CONTROL REGISTER(1)

U-0	U-0	U-0	U-0	U-0	U-0	R/W-0/0	U-1
—	—	—	—	—	—	VREGPM	—
bit 7							bit 0

Legend:		
R = Readable bit	W = Writable bit	U = Unimplemented bit, read as ‘0’
u = Bit is unchanged	x = Bit is unknown	-n/n = Value at POR and BOR/Value at all other Resets
‘1’ = Bit is set	‘0’ = Bit is cleared	

bit 7-2 **Unimplemented:** Read as ‘0’

bit 1 **VREGPM**: Voltage Regulator Power Mode Selection bit
- 1 = Low-Power Sleep mode enabled in Sleep(2)
  Draws lowest current in Sleep, slower wake-up
- 0 = Normal Power mode enabled in Sleep(2)
  Draws higher current in Sleep, faster wake-up

bit 0 **Unimplemented:** Read as ‘1’. Maintain this bit set

Note 1: PIC16F15324/44 only.

2: See **Section 37.0 “Electrical Specifications”**.

REGISTER 11-2: CPUDOZE: DOZE AND IDLE REGISTER

R/W-0/u	R/W/HC/HS-0/0	R/W-0/0	R/W-0/0	U-0	R/W-0/0	R/W-0/0	R/W-0/0
IDLEN	DOZEN(1,2)	ROI	DOE	—	DOZE[2:0]		
bit 7							bit 0

Legend:		
R = Readable bit	W = Writable bit	U = Unimplemented bit, read as ‘0’
u = Bit is unchanged	x = Bit is unknown	-n/n = Value at POR and BOR/Value at all other Resets
‘1’ = Bit is set	‘0’ = Bit is cleared	

bit 7 **IDLEN:** Idle Enable bit
1 = A SLEEP instruction inhibits the CPU clock, but not the peripheral clock(s)
0 = A SLEEP instruction places the device into full Sleep mode

bit 6 **DOZEN:** Doze Enable bit(1,2)
1 = The CPU executes instruction cycles according to Doze setting
0 = The CPU executes all instruction cycles (fastest, highest power operation)

bit 5 **ROI:** Recover-on-Interrupt bit
1 = Entering the Interrupt Service Routine (ISR) makes DOZEN = 0 bit, bringing the CPU to full-speed operation.
0 = Interrupt entry does not change DOZEN

bit 4 **DOE:** Doze on Exit bit
1 = Executing RETFIE makes DOZEN = 1, bringing the CPU to reduced speed operation.
0 = RETFIE does not change DOZEN

bit 3 **Unimplemented:** Read as ‘0’

bit 2-0 **DOZE[2:0]:** Ratio of CPU Instruction Cycles to Peripheral Instruction Cycles
111 =1:256
110 =1:128
101 =1:64
100 =1:32
011 =1:16
010 =1:8
001 =1:4
000 =1:2

Note 1: When ROI = 1 or DOE = 1, DOZEN is changed by hardware interrupt entry and/or exit.
2: Entering ICD overrides DOZEN, returning the CPU to full execution speed; this bit is not affected.

TABLE 11-1: SUMMARY OF REGISTERS ASSOCIATED WITH POWER-DOWN MODE

Name	Bit 7	Bit 6	Bit 5	Bit 4	Bit 3	Bit 2	Bit 1	Bit 0	Register on Page
INTCON	GIE	PEIE	—	—	—	—	—	INTEDG	125
PIE0	—	—	TMR0IE	IOCIE	—	—	—	INTE	126
PIE1	OSFIE	CSWIE	—	—	—	—	—	ADIE	127
PIE2	—	ZCDIE	—	—	—	—	C2IE	C1IE	128
PIE3	RC2IE	TX2IE	RC1IE	TX1IE	—	—	BCL1IE	SSP1IE	129
PIE4	—	—	—	—	—	—	TMR2IE	TMR1IE	130
PIR0	—	—	TMR0IF	IOCIF	—	—	—	INTF	134
PIR1	OSFIF	CSWIF	—	—	—	—	—	ADIF	135
PIR2	—	ZCDIF	—	—	—	—	C2IF	C1IF	136
PIR3	RC2IF	TX2IF	RC1IF	TX1IF	—	—	BCL1IF	SSP1IF	137
PIR4	—	—	—	—	—	—	TMR2IF	TMR1IF	138
IOCAP	—	—	IOCAP5	IOCAP4	IOCAP3	IOCAP2	IOCAP1	IOCAP0	214
IOCAN	—	—	IOCAN5	IOCAN4	IOCAN3	IOCAN2	IOCAN1	IOCAN0	214
IOCAF	—	—	IOCAF5	IOCAF4	IOCAF3	IOCAF2	IOCAF1	IOCAF0	215
IOCBP(1)	—	—	—	IOCBP4	IOCBP3	IOCBP2	IOCBP1	IOCBP0	216
IOCBN(1)	—	—	—	IOCBN4	IOCBN3	IOCBN2	IOCBN1	IOCBN0	216
IOCBF(1)	—	—	—	IOCBF4	IOCBF3	IOCBF2	IOCBF1	IOCBF0	217
IOCCP	IOCCP7(1)	IOCCP6(1)	IOCCP5	IOCCP4	IOCCP3	IOCCP2	IOCCP1	IOCCP0	218
IOCCN	IOCCN7(1)	IOCCN6(1)	IOCCN5	IOCCN4	IOCCN3	IOCCN2	IOCCN1	IOCCN0	218
IOCCF	IOCCF7(1)	IOCCF6(1)	IOCCF5	IOCCF4	IOCCF3	IOCCF2	IOCCF1	IOCCF0	219
STATUS	—	—	—	$\overline{TO}$	$\overline{PD}$	Z	DC	C	36
VREGCON	—	—	—	—	—	—	VREGPM	—	147
CPUDOZE	IDLEN	DOZEN	ROI	DOE	—	DOZE[2:0]			148
WDTCON0	—	—	WDTPS[4:0]					SWDTEN	154

Legend: — = unimplemented location, read as '0'. Shaded cells are not used in Power-Down mode.

Note 1: Present only in PIC16(L)F15344.

12.0 WINDOWED WATCHDOG TIMER (WWDT)

The Watchdog Timer (WDT) is a system timer that generates a Reset if the firmware does not issue a `CLRWDT` instruction within the time-out period. The Watchdog Timer is typically used to recover the system from unexpected events. The Windowed Watchdog Timer (WWDT) differs in that `CLRWDT` instructions are only accepted when they are performed within a specific window during the time-out period.

The WDT has the following features:

- Selectable clock source
- Multiple operating modes
  - WDT is always on
  - WDT is off when in Sleep
  - WDT is controlled by software
  - WDT is always off
- Configurable time-out period is from 1 ms to 256 seconds (nominal)
- Configurable window size from 12.5 to 100 percent of the time-out period
- Multiple Reset conditions
- Operation during Sleep

FIGURE 12-1: WATCHDOG TIMER BLOCK DIAGRAM

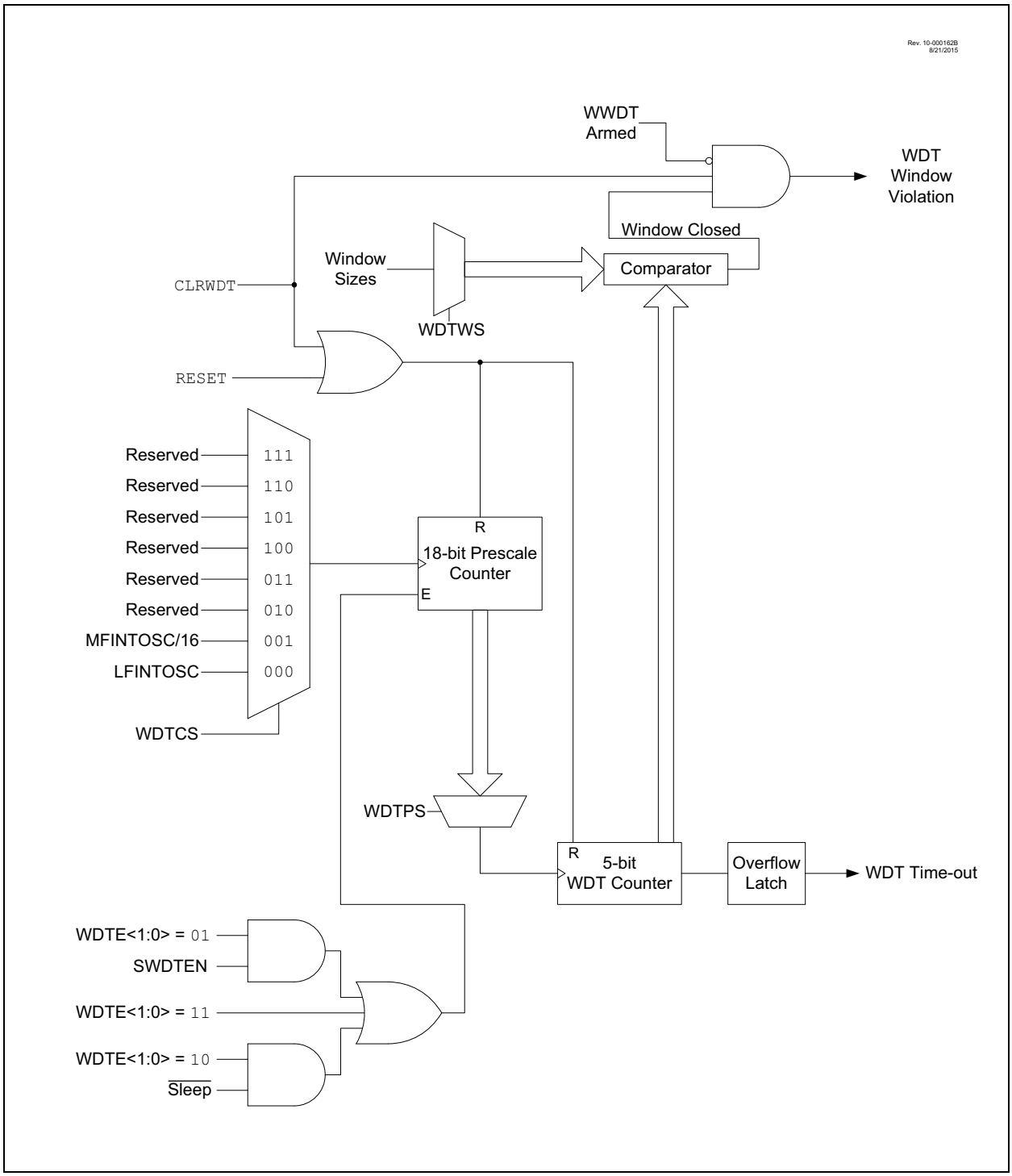

12.1 Independent Clock Source

The WDT can derive its time base from either the 31 kHz LFINTOSC or 31.25 kHz MFINTOSC internal oscillators, depending on the value of either the WDTCCS[2:0] Configuration bits or the WDTCS[2:0] bits of WDTCON1. Time intervals in this chapter are based on a minimum nominal interval of 1 ms. See **Section 37.0 "Electrical Specifications"** for LFINTOSC and MFINTOSC tolerances.

12.2 WDT Operating Modes

The Watchdog Timer module has four operating modes controlled by the WDTE[1:0] bits in Configuration Words. See Table 12-1.

12.2.1 WDT IS ALWAYS ON

When the WDTE bits of Configuration Words are set to '11', the WDT is always on.

WDT protection is active during Sleep.

12.2.2 WDT IS OFF IN SLEEP

When the WDTE bits of Configuration Words are set to '10', the WDT is on, except in Sleep.

WDT protection is not active during Sleep.

12.2.3 WDT CONTROLLED BY SOFTWARE

When the WDTE bits of Configuration Words are set to '01', the WDT is controlled by the SWDTEN bit of the WDTCON0 register.

12.2.4 WDT IS OFF

When the WDTE bits of the Configuration Word are set to '00', the WDT is always OFF.

WDT protection is unchanged by Sleep. See Table 12-1 for more details.

TABLE 12-1: WDT OPERATING MODES

WDTE[1:0]	SWDTEN	Device Mode	WDT Mode
11	X	X	Active
10	X	Awake	Active
		Sleep	Disabled
01	1	X	Active
	0	X	Disabled
00	X	X	Disabled

12.3 Time-Out Period

The WDTPS bits of the WDTCON0 register set the time-out period from 1 ms to 256 seconds (nominal). After a Reset, the default time-out period is two seconds.

12.4 Watchdog Window

The Watchdog Timer has an optional Windowed mode that is controlled by the WDTCWS[2:0] Configuration bits and WINDOW[2:0] bits of the WDTCON1 register. In the Windowed mode, the `CLRWDT` instruction must occur within the allowed window of the WDT period. Any `CLRWDT` instruction that occurs outside of this window will trigger a window violation and will cause a WDT Reset, similar to a WDT time out. See Figure 12-2 for an example.

The window size is controlled by the WDTCWS[2:0] Configuration bits, or the WINDOW[2:0] bits of WDTCON1, if WDTCWS[2:0] = `111`.

In the event of a window violation, a Reset will be generated and the $\overline{\text{WDTWV}}$ bit of the PCON register will be cleared. This bit is set by a POR or can be set in firmware.

12.5 Clearing the WDT

The WDT is cleared when any of the following conditions occur:

- Any Reset
- Valid `CLRWDT` instruction is executed
- Device enters Sleep
- Device wakes up from Sleep
- WDT is disabled
- Oscillator Start-up Timer (OST) is running
- Any write to the WDTCON0 or WDTCON1 registers

12.5.1 `CLRWDT` CONSIDERATIONS (WINDOWED MODE)

When in Windowed mode, the WDT must be armed before a `CLRWDT` instruction will clear the timer. This is performed by reading the WDTCON0 register. Executing a `CLRWDT` instruction without performing such an arming action will trigger a window violation.

See Table 12-2 for more information.

12.6 Operation During Sleep

When the device enters Sleep, the WDT is cleared. If the WDT is enabled during Sleep, the WDT resumes counting. When the device exits Sleep, the WDT is cleared again.

The WDT remains clear until the OST, if enabled, completes. See **Section 9.0 "Oscillator Module (with Fail-Safe Clock Monitor)"** for more information on the OST.

When a WDT time-out occurs while the device is in Sleep, no Reset is generated. Instead, the device wakes up and resumes operation. The $\overline{\text{TO}}$ and $\overline{\text{PD}}$ bits in the STATUS register are changed to indicate the event. The $\overline{\text{RWDT}}$ bit in the PCON register can also be used. See **Section 4.3.2.1 "STATUS Register"** for more information.

TABLE 12-2: WDT CLEARING CONDITIONS

Conditions	WDT
WDTE[1:0] = 00	Cleared
WDTE[1:0] = 01 and SWDTEN = 0	
WDTE[1:0] = 10 and enter Sleep	
CLRWDT Command	
Oscillator Fail Detected	
Exit Sleep + System Clock = EXTOSC, INTOSC	
Change INTOSC divider (IRCF bits)	Unaffected

FIGURE 12-2: WINDOW PERIOD AND DELAY

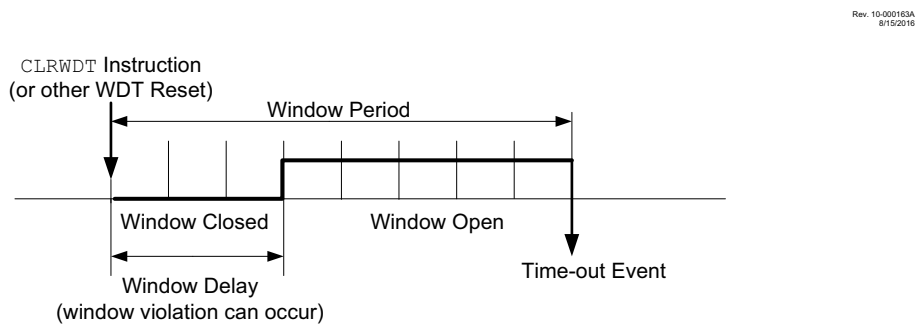

12.7 Register Definitions: Windowed Watchdog Timer Control

REGISTER 12-1: WDTCON0: WATCHDOG TIMER CONTROL REGISTER 0

U-0	U-0	R/W(3)-q/q(2)	R/W(3)-q/q(2)	R/W(3)-q/q(2)	R/W(3)-q/q(2)	R/W(3)-q/q(2)	R/W-0/0
—	—	WDTPS[4:0](1)					SWDTEN
bit 7							bit 0

Legend:		
R = Readable bit	W = Writable bit	U = Unimplemented bit, read as ‘0’
u = Bit is unchanged	x = Bit is unknown	-n/n = Value at POR and BOR/Value at all other Resets
‘1’ = Bit is set	‘0’ = Bit is cleared	q = Value depends on condition

bit 7-6 **Unimplemented:** Read as ‘0’

bit 5-1 **WDTPS[4:0]:** Watchdog Timer Prescale Select bits(1)

Bit Value = Prescale Rate

11111 = Reserved. Results in minimum interval (1:32)
•
•
•
10011 = Reserved. Results in minimum interval (1:32)

10010 = 1:8388608 (2^{23}) (Interval 256s nominal)
10001 = 1:4194304 (2^{22}) (Interval 128s nominal)
10000 = 1:2097152 (2^{21}) (Interval 64s nominal)
01111 = 1:1048576 (2^{20}) (Interval 32s nominal)
01110 = 1:524288 (2^{19}) (Interval 16s nominal)
01101 = 1:262144 (2^{18}) (Interval 8s nominal)
01100 = 1:131072 (2^{17}) (Interval 4s nominal)
01011 = 1:65536 (Interval 2s nominal) (Reset value)
01010 = 1:32768 (Interval 1s nominal)
01001 = 1:16384 (Interval 512 ms nominal)
01000 = 1:8192 (Interval 256 ms nominal)
00111 = 1:4096 (Interval 128 ms nominal)
00110 = 1:2048 (Interval 64 ms nominal)
00101 = 1:1024 (Interval 32 ms nominal)
00100 = 1:512 (Interval 16 ms nominal)
00011 = 1:256 (Interval 8 ms nominal)
00010 = 1:128 (Interval 4 ms nominal)
00001 = 1:64 (Interval 2 ms nominal)
00000 = 1:32 (Interval 1 ms nominal)

bit 0 **SWDTEN:** Software Enable/Disable for Watchdog Timer bit

If WDTE[1:0] = 1x:
This bit is ignored.
If WDTE[1:0] = 01:
1 = WDT is turned on
0 = WDT is turned off
If WDTE[1:0] = 00:
This bit is ignored.

Note 1: Times are approximate. WDT time is based on 31 kHz LFINTOSC.

2: When WDTCPS [4:0] in CONFIG3 = 11111, the Reset value of WDTPS[4:0] is 01011. Otherwise, the Reset value of WDTPS[4:0] is equal to WDTCPS[4:0] in CONFIG3.

3: When WDTCPS [4:0] in CONFIG3 ≠ 11111, these bits are read-only.

REGISTER 12-2: WDTCON1: WATCHDOG TIMER CONTROL REGISTER 1

U-0	R/W(3)-q/q(1)	R/W(3)-q/q(1)	R/W(3)-q/q(1)	U-0	R/W(4)-q/q(2)	R/W(4)-q/q(2)	R/W(4)-q/q(2)
—	WDTCS[2:0]			—	WINDOW[2:0]		
bit 7							bit 0

Legend:		
R = Readable bit	W = Writable bit	U = Unimplemented bit, read as ‘0’
u = Bit is unchanged	x = Bit is unknown	-n/n = Value at POR and BOR/Value at all other Resets
‘1’ = Bit is set	‘0’ = Bit is cleared	q = Value depends on condition

bit 7 **Unimplemented:** Read as ‘0’

bit 6-4 **WDTCS[2:0]:** Watchdog Timer Clock Select bits

111 = Reserved
•
•
•
010 = Reserved
001 = MFINTOSC 31.25 kHz
000 = LFINTOSC 31 kHz

bit 3 **Unimplemented:** Read as ‘0’

bit 2-0 **WINDOW[2:0]:** Watchdog Timer Window Select bits

WINDOW[2:0]	Window delay Percent of time	Window opening Percent of time
111	N/A	100
110	12.5	87.5
101	25	75
100	37.5	62.5
011	50	50
010	62.5	37.5
001	75	25
000	87.5	12.5

Note 1: If WDTCCS [2:0] in CONFIG3 = 111, the Reset value of WDTCS[2:0] is 000.
2: The Reset value of WINDOW[2:0] is determined by the value of WDTCWS[2:0] in the CONFIG3 register.
3: If WDTCCS[2:0] in CONFIG3 ≠ 111, these bits are read-only.
4: If WDTCWS[2:0] in CONFIG3 ≠ 111, these bits are read-only.

REGISTER 12-3: WDTPSL: WDT PRESCALE SELECT LOW BYTE REGISTER

R-0/0	R-0/0	R-0/0	R-0/0	R-0/0	R-0/0	R-0/0	R-0/0
PSCNT[7:0](1)							
bit 7							bit 0

Legend:		
R = Readable bit	W = Writable bit	U = Unimplemented bit, read as ‘0’
u = Bit is unchanged	x = Bit is unknown	-n/n = Value at POR and BOR/Value at all other Resets
‘1’ = Bit is set	‘0’ = Bit is cleared	

bit 7-0 **PSCNT[7:0]**: Prescale Select Low Byte bits(1)

Note 1: The 18-bit WDT prescale value, PSCNT[17:0], includes the WDTPSL, WDTPSH, and the lower bits of the WDTTMR registers. PSCNT[17:0] is intended for debug operations and must be read during normal operation.

REGISTER 12-4: WDTPSH: WDT PRESCALE SELECT HIGH BYTE REGISTER

R-0/0	R-0/0	R-0/0	R-0/0	R-0/0	R-0/0	R-0/0	R-0/0
PSCNT[15:8](1)							
bit 7							bit 0

Legend:		
R = Readable bit	W = Writable bit	U = Unimplemented bit, read as ‘0’
u = Bit is unchanged	x = Bit is unknown	-n/n = Value at POR and BOR/Value at all other Resets
‘1’ = Bit is set	‘0’ = Bit is cleared	

bit 7-0 **PSCNT[15:8]**: Prescale Select High Byte bits(1)

Note 1: The 18-bit WDT prescale value, PSCNT[17:0], includes the WDTPSL, WDTPSH, and the lower bits of the WDTTMR registers. PSCNT[17:0] is intended for debug operations and must be read during normal operation.

REGISTER 12-5: WDTTMR: WDT TIMER REGISTER

U-0	R-0/0	R-0/0	R-0/0	R-0/0	R-0/0	R-0/0	R-0/0
—	WDTTMR[3:0]				STATE	PSCNT[17:16](1)	
bit 7							bit 0

Legend:		
R = Readable bit	W = Writable bit	U = Unimplemented bit, read as ‘0’
u = Bit is unchanged	x = Bit is unknown	-n/n = Value at POR and BOR/Value at all other Resets
‘1’ = Bit is set	‘0’ = Bit is cleared	

bit 7 **Unimplemented:** Read as ‘0’

bit 6-3 **WDTTMR[3:0]**: Watchdog Timer Value bits

bit 2 **STATE**: WDT Armed Status bit
1 = WDT is armed
0 = WDT is not armed

bit 1-0 **PSCNT[17:16]**: Prescale Select Upper Byte bits(1)

Note 1: The 18-bit WDT prescale value, PSCNT[17:0], includes the WDTPSL, WDTPSH, and the lower bits of the WDTTMR registers. PSCNT[17:0] is intended for debug operations and must be read during normal operation.

TABLE 12-3: SUMMARY OF REGISTERS ASSOCIATED WITH WATCHDOG TIMER

Name	Bit 7	Bit 6	Bit 5	Bit 4	Bit 3	Bit 2	Bit 1	Bit 0	Register on Page
OSCCON1	—	NOSC[2:0]			NDIV[3:0]				114
OSCCON2	—	COSC[2:0]			CDIV[3:0]				114
OSCCON3	CSWHOLD	—	—	ORDY	NOSCR	—	—	—	115
PCON0	STKOVF	STKUNF	$\overline{\text{WDTWV}}$	$\overline{\text{RWDT}}$	$\overline{\text{RMCLR}}$	$\overline{\text{RI}}$	$\overline{\text{POR}}$	$\overline{\text{BOR}}$	103
STATUS	—	—	—	$\overline{\text{TO}}$	$\overline{\text{PD}}$	Z	DC	C	36
WDTCON0	—	—	WDTPS[4:0]					SWDTEN	154
WDTCON1	—	WDTCS[2:0]			—	WINDOW[2:0]			155
WDTPSL	PSCNT[7:0]								156
WDTPSH	PSCNT[15:8]								156
WDTTMR	—	WDTTMR[4:0]				STATE	PSCNT[17:16]		156

Legend: – = unimplemented locations read as ‘0’. Shaded cells are not used by Watchdog Timer.

TABLE 12-4: SUMMARY OF CONFIGURATION WORD WITH WATCHDOG TIMER

Name	Bits	Bit -/7	Bit -/6	Bit 13/5	Bit 12/4	Bit 11/3	Bit 10/2	Bit 9/1	Bit 8/0	Register on Page
CONFIG1	13:8	—	—	FCMEN	—	CSWEN	—	—	$\overline{\text{CLKOUTEN}}$	80
	7:0	—	RSTOSC[2:0]			—	FEXTOSC[2:0]			

Legend: — = unimplemented location, read as ‘0’. Shaded cells are not used by Watchdog Timer.

13.0 NONVOLATILE MEMORY (NVM) CONTROL

NVM consists of the Program Flash Memory (PFM).

NVM is accessible by using both the FSR and INDF registers, or through the NVMREG register interface.

The write time is controlled by an on-chip timer. The write/erase voltages are generated by an on-chip charge pump rated to operate over the operating voltage range of the device.

NVM can be protected in two ways; by either code protection or write protection.

Code protection ($\overline{CP}$ bit in Configuration Word 5) disables access, reading and writing, to the PFM via external device programmers. Code protection does not affect the self-write and erase functionality. Code protection can only be Reset by a device programmer performing a Bulk Erase to the device, clearing all nonvolatile memory, Configuration bits, and User IDs.

Write protection prohibits self-write and erase to a portion or all of the PFM, as defined by the WRT[1:0] bits of Configuration Word 4. Write protection does not affect a device programmer's ability to read, write, or erase the device.

13.1 Program Flash Memory (PFM)

PFM consists of an array of 14-bit words as user memory, with additional words for User ID information, Configuration words, and interrupt vectors. PFM provides storage locations for:

- User program instructions
- User defined data

PFM data can be read and/or written to through:

- CPU instruction fetch (read-only)
- FSR/INDF indirect access (read-only) (**Section 13.2 "FSR and INDF Access"**)
- NVMREG access (**Section 13.3 "NVMREG Access"**
- In-Circuit Serial Programming™ (ICSP™)

Read operations return a single word of memory. When write and erase operations are done on a row basis, the row size is defined in Table 13-1. PFM will erase to a logic '1' and program to a logic '0'.

TABLE 13-1: FLASH MEMORY ORGANIZATION BY DEVICE

Device	Row Erase (words)	Write Latches (words)	Total Program Flash (words)
PIC16(L)F15324	32	32	4096
PIC16(L)F15344			4096

It is important to understand the PFM memory structure for erase and programming operations. PFM is arranged in rows. A row consists of 32 14-bit program memory words. A row is the minimum size that can be erased by user software.

All or a portion of a row can be programmed. Data to be written into the program memory row is written to 14-bit wide data write latches. These latches are not directly accessible, but may be loaded via sequential writes to the NVMDATH:NVMDATL register pair.

Note: To modify only a portion of a previously programmed row, the contents of the entire row must be read. Then, the new data and retained data can be written into the write latches to reprogram the row of PFM. However, any unprogrammed locations can be written without first erasing the row. In this case, it is not necessary to save and rewrite the other previously programmed locations

13.1.1 PROGRAM MEMORY VOLTAGES

The PFM is readable and writable during normal operation over the full VDD range.

13.1.1.1 Programming Externally

The program memory cell and control logic support write and Bulk Erase operations down to the minimum device operating voltage. Special BOR operation is enabled during Bulk Erase (**Section 8.2.4 "BOR is always OFF"**).

13.1.1.2 Self-programming

The program memory cell and control logic will support write and row erase operations across the entire VDD range. Bulk Erase is not available when self-programming.

13.2 FSR and INDF Access

The FSR and INDF registers allow indirect access to the PFM.

13.2.1 FSR READ

With the intended address loaded into an FSR register a `MOVIW` instruction or read of INDF will read data from the PFM.

Reading from NVM requires one instruction cycle. The CPU operation is suspended during the read, and resumes immediately after. Read operations return a single byte of memory.

13.2.2 FSR WRITE

Writing/erasing the NVM through the FSR registers (ex. `MOVWI` instruction) is not supported in the PIC16(L)F15324/44 devices.

13.3 NVMREG Access

The NVMREG interface allows read/write access to all the locations accessible by FSRs, and also read/write access to the User ID locations, and read-only access to the device identification, revision, and Configuration data.

Writing or erasing of NVM via the NVMREG interface is prevented when the device is write-protected.

13.3.1 NVMREG READ OPERATION

To read a NVM location using the NVMREG interface, the user must:

1. Clear the NVMREGS bit of the NVMCON1 register if the user intends to access PFM locations, or set NMVREGS if the user intends to access User ID, or Configuration locations.
2. Write the desired address into the NVMADRH:NVMADRL register pair ().
3. Set the RD bit of the NVMCON1 register to initiate the read.

Once the read control bit is set, the CPU operation is suspended during the read, and resumes immediately after. The data is available in the very next cycle, in the NVMDATH:NVMDATL register pair; therefore, it can be read as two bytes in the following instructions.

NVMDATH:NVMDATL register pair will hold this value until another read or until it is written to by the user.

Upon completion, the RD bit is cleared by hardware.

FIGURE 13-1: FLASH PROGRAM MEMORY READ FLOWCHART

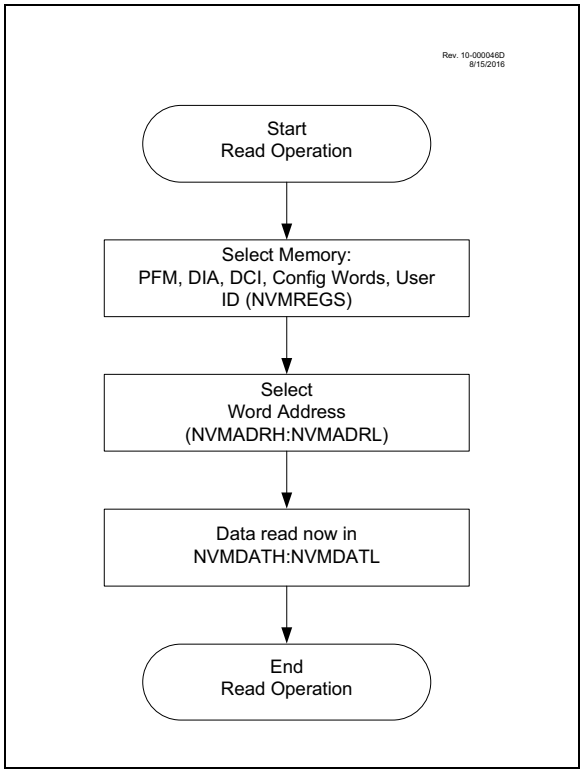

EXAMPLE 13-1: PROGRAM MEMORY READ

```
* This code block will read 1 word of program
* memory at the memory address:
    PROG_ADDR_HI : PROG_ADDR_LO
*   data will be returned in the variables;
*   PROG_DATA_HI, PROG_DATA_LO

    BANKSEL  NVMADRL          ; Select Bank for NVMCON registers
    MOVLW    PROG_ADDR_LO     ;
    MOVWF    NVMADRL          ; Store LSB of address
    MOVLW    PROG_ADDR_HI     ;
    MOVWF    NVMADRH          ; Store MSB of address

    BCF      NVMCON1,NVMREGS  ; Do not select Configuration Space
    BSF      NVMCON1,RD       ; Initiate read

    MOVF     NVMDATL,W        ; Get LSB of word
    MOVWF    PROG_DATA_LO     ; Store in user location
    MOVF     NVMDATH,W        ; Get MSB of word
    MOVWF    PROG_DATA_HI     ; Store in user location
```

13.3.2 NVM UNLOCK SEQUENCE

The unlock sequence is a mechanism that protects the NVM from unintended self-write programming or erasing. The sequence must be executed and completed without interruption to successfully complete any of the following operations:

- PFM Row Erase
- Load of PFM write latches
- Write of PFM write latches to PFM memory
- Write of PFM write latches to User IDs

The unlock sequence consists of the following steps and must be completed in order:

- Write 55h to NVMCON2
- Write AAh to NMVCON2
- Set the WR bit of NVMCON1

Once the WR bit is set, the processor will stall internal operations until the operation is complete and then resume with the next instruction.

> **Note:** The two `NOP` instructions after setting the WR bit that were required in previous devices are not required for PIC16(L)F15324/44 devices. See Figure 13-2.

Since the unlock sequence must not be interrupted, global interrupts must be disabled prior to the unlock sequence and re-enabled after the unlock sequence is completed.

FIGURE 13-2: NVM UNLOCK SEQUENCE FLOWCHART

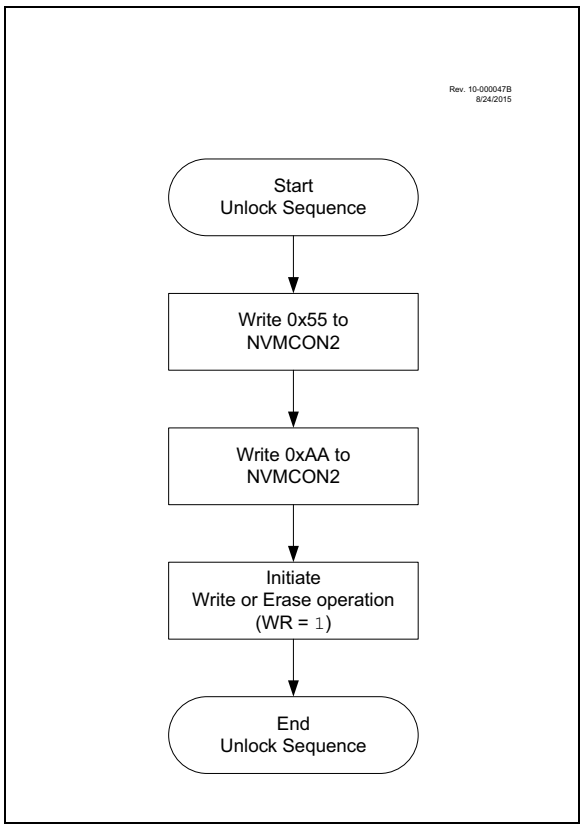

EXAMPLE 13-2: NVM UNLOCK SEQUENCE

```
BCF      INTCON, GIE      ; Recommended so sequence is not interrupted
BANKSEL  NVMCON1          ;
BSF      NVMCON1, WREN    ; Enable write/erase
MOVLW    55h              ; Load 55h
MOVWF    NVMCON2          ; Step 1: Load 55h into NVMCON2
MOVLW    AAh              ; Step 2: Load W with AAh
MOVWF    NVMCON2          ; Step 3: Load AAH into NVMCON2
BSF      NVMCON1, WR      ; Step 4: Set WR bit to begin write/erase
BSF      INTCON, GIE      ; Re-enable interrupts
```

Note 1: Sequence begins when NVMCON2 is written; steps 1-4 must occur in the cycle-accurate order shown.

2: Opcodes shown are illustrative; any instruction that has the indicated effect may be used.

13.3.3 NVMREG ERASE OF PFM

Before writing to PFM, the word(s) to be written must be erased or previously unwritten. PFM can only be erased one row at a time. No automatic erase occurs upon the initiation of the write to PFM.

To erase a PFM row:

1. Clear the NVMREGS bit of the NVMCON1 register to erase PFM locations, or set the NMVREGS bit to erase User ID locations.
2. Write the desired address into the NVMADRH:NVMADRL register pair (Table 13-2).
3. Set the FREE and WREN bits of the NVMCON1 register.
4. Perform the unlock sequence as described in **Section 13.3.2 “NVM Unlock Sequence”**.

If the PFM address is write-protected, the WR bit will be cleared and the erase operation will not take place.

While erasing PFM, CPU operation is suspended, and resumes when the operation is complete. Upon completion, the NVMIF is set, and an interrupt will occur if the NVMIE bit is also set.

Write latch data is not affected by erase operations, and WREN will remain unchanged.

FIGURE 13-3: NVM ERASE FLOWCHART

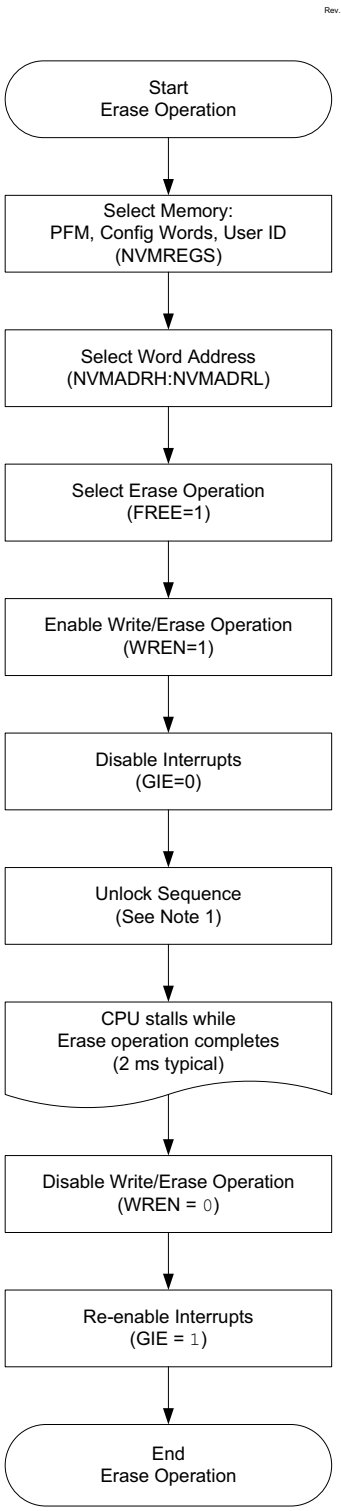

Note 1: See Figure 13-2.

EXAMPLE 13-3: ERASING ONE ROW OF PROGRAM FLASH MEMORY (PFM)

```
; This sample row erase routine assumes the following:
; 1.A valid address within the erase row is loaded in variables ADDRH:ADDRL
; 2.ADDRH and ADDRL are located in common RAM (locations 0x70 - 0x7F)

BANKSEL         NVMADRL
MOVF            ADDRL,W
MOVWF           NVMADRL                 ; Load lower 8 bits of erase address boundary
MOVF            ADDRH,W
MOVWF           NVMADRH                 ; Load upper 6 bits of erase address boundary
BCF             NVMCON1,NVMREGS         ; Choose PFM memory area
BSF             NVMCON1,FREE            ; Specify an erase operation
BSF             NVMCON1,WREN            ; Enable writes
BCF             INTCON,GIE              ; Disable interrupts during unlock sequence

; -------------------------------REQUIRED UNLOCK SEQUENCE:------------------------------

MOVLW           55h                     ; Load 55h to get ready for unlock sequence
MOVWF           NVMCON2                 ; First step is to load 55h into NVMCON2
MOVLW           AAh                     ; Second step is to load AAh into W
MOVWF           NVMCON2                 ; Third step is to load AAh into NVMCON2
BSF             NVMCON1,WR              ; Final step is to set WR bit

; ------------------------------------------------------------------------------------

BSF             INTCON,GIE              ; Re-enable interrupts, erase is complete
BCF             NVMCON1,WREN            ; Disable writes
```

TABLE 13-2: NVM ORGANIZATION AND ACCESS INFORMATION

Host Values			NVMREG Access			FSR Access	
Memory Function	**Program Counter (PC), ICSP™ Address**	**Memory Type**	**NVMREGS bit (NVMCON1)**	**NVMADR[14:0]**	**Allowed Operations**	**FSR Address**	**FSR Programming Address**
Reset Vector	0000h	PFM	0	0000h	Read Write	8000h	Read-0nly
User Memory	0001h		0	0001h		8001h	
	0003h			0003h		8003h	
INT Vector	0004h		0	0004h		8004h	
User Memory	0005h		0	0005h		8005h	
	0FFFh		0	0FFFh		8FFFh	
User ID	8000h	PFM	1	0000h	Read Write	No Access	
	8003h			0003h			
Reserved	8004h	—	–	0004h	—		
Rev ID	8005h	PFM	1	0005h	Read-Only		
Device ID	8006h		1	0006h			
CONFIG1	8007h		1	0007h	Read Write		
CONFIG2	8008h		1	0008h			
CONFIG3	8009h		1	0009h			
CONFIG4	800Ah		1	000Ah			
CONFIG5	800Bh		1	000Bh			
DIA and DCI	8100h-82FFh	PFM and Hard coded	1	0100h-02FFh	Read-Only	No Access	

13.3.4 NVMREG WRITE TO PROGRAM MEMORY

Program memory is programmed using the following steps:

1. Load the address of the row to be programmed into NVMADRH:NVMADRL.
2. Load each write latch with data.
3. Initiate a programming operation.
4. Repeat steps 1 through 3 until all data is written.

Before writing to program memory, the word(s) to be written must be erased or previously unwritten. Program memory can only be erased one row at a time. No automatic erase occurs upon the initiation of the write.

Program memory can be written one or more words at a time. The maximum number of words written at one time is equal to the number of write latches. See Figure 13-4 (row writes to program memory with 32 write latches) for more details.

The write latches are aligned to the Flash row address boundary defined by the upper ten bits of NVMADRH:NVMADRL, (NVMADRH[6:0]:NVMADRL[7:5]) with the lower five bits of NVMADRL, (NVMADRL[4:0]) determining the write latch being loaded. Write operations do not cross these boundaries. At the completion of a program memory write operation, the data in the write latches is reset to contain 0x3FFF.

The following steps must be completed to load the write latches and program a row of program memory. These steps are divided into two parts. First, each write latch is loaded with data from the NVMDATH:NVMDATL using the unlock sequence with LWLO = `1`. When the last word to be loaded into the write latch is ready, the LWLO bit is cleared and the unlock sequence executed. This initiates the programming operation, writing all the latches into Flash program memory.

Note:	The special unlock sequence is required to load a write latch with data or initiate a Flash programming operation. If the unlock sequence is interrupted, writing to the latches or program memory will not be initiated.

1. Set the WREN bit of the NVMCON1 register.
2. Clear the NVMREGS bit of the NVMCON1 register.
3. Set the LWLO bit of the NVMCON1 register. When the LWLO bit of the NVMCON1 register is ‘`1`’, the write sequence will only load the write latches and will not initiate the write to Flash program memory.
4. Load the NVMADRH:NVMADRL register pair with the address of the location to be written.
5. Load the NVMDATH:NVMDATL register pair with the program memory data to be written.
6. Execute the unlock sequence (**Section 13.3.2 “NVM Unlock Sequence”**). The write latch is now loaded.
7. Increment the NVMADRH:NVMADRL register pair to point to the next location.
8. Repeat steps 5 through 7 until all but the last write latch has been loaded.
9. Clear the LWLO bit of the NVMCON1 register. When the LWLO bit of the NVMCON1 register is ‘`0`’, the write sequence will initiate the write to Flash program memory.
10. Load the NVMDATH:NVMDATL register pair with the program memory data to be written.
11. Execute the unlock sequence (**Section 13.3.2 “NVM Unlock Sequence”**). The entire program memory latch content is now written to Flash program memory.

Note:	The program memory write latches are reset to the blank state (0x3FFF) at the completion of every write or erase operation. As a result, it is not necessary to load all the program memory write latches. Unloaded latches will remain in the blank state.

An example of the complete write sequence is shown in Example 13-4. The initial address is loaded into the NVMADRH:NVMADRL register pair; the data is loaded using indirect addressing.

FIGURE 13-4: NVMREGS WRITES TO PROGRAM FLASH MEMORY WITH 32 WRITE LATCHES

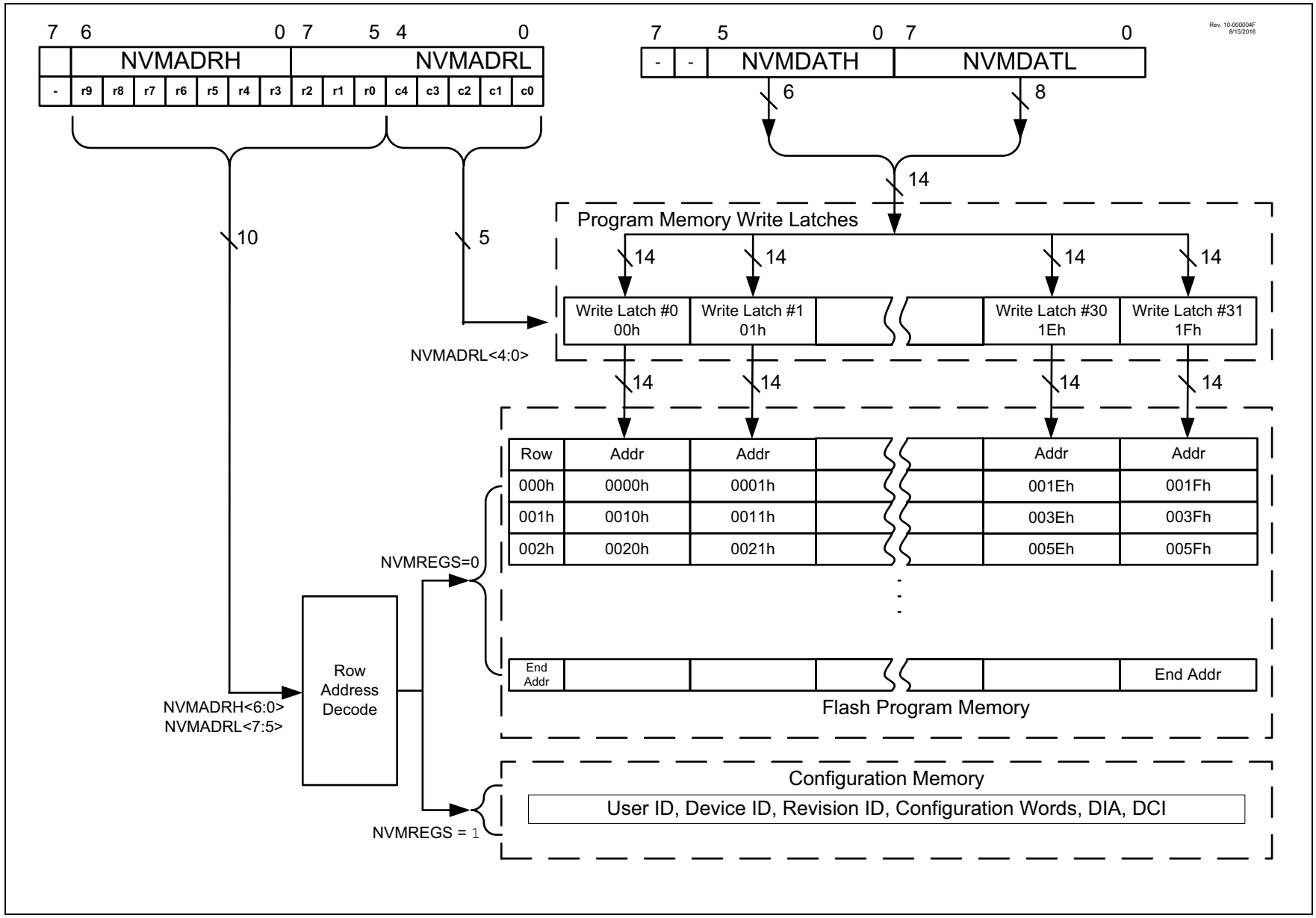

© 2017-2021 Microchip Technology Inc.

FIGURE 13-5: PROGRAM FLASH MEMORY WRITE FLOWCHART

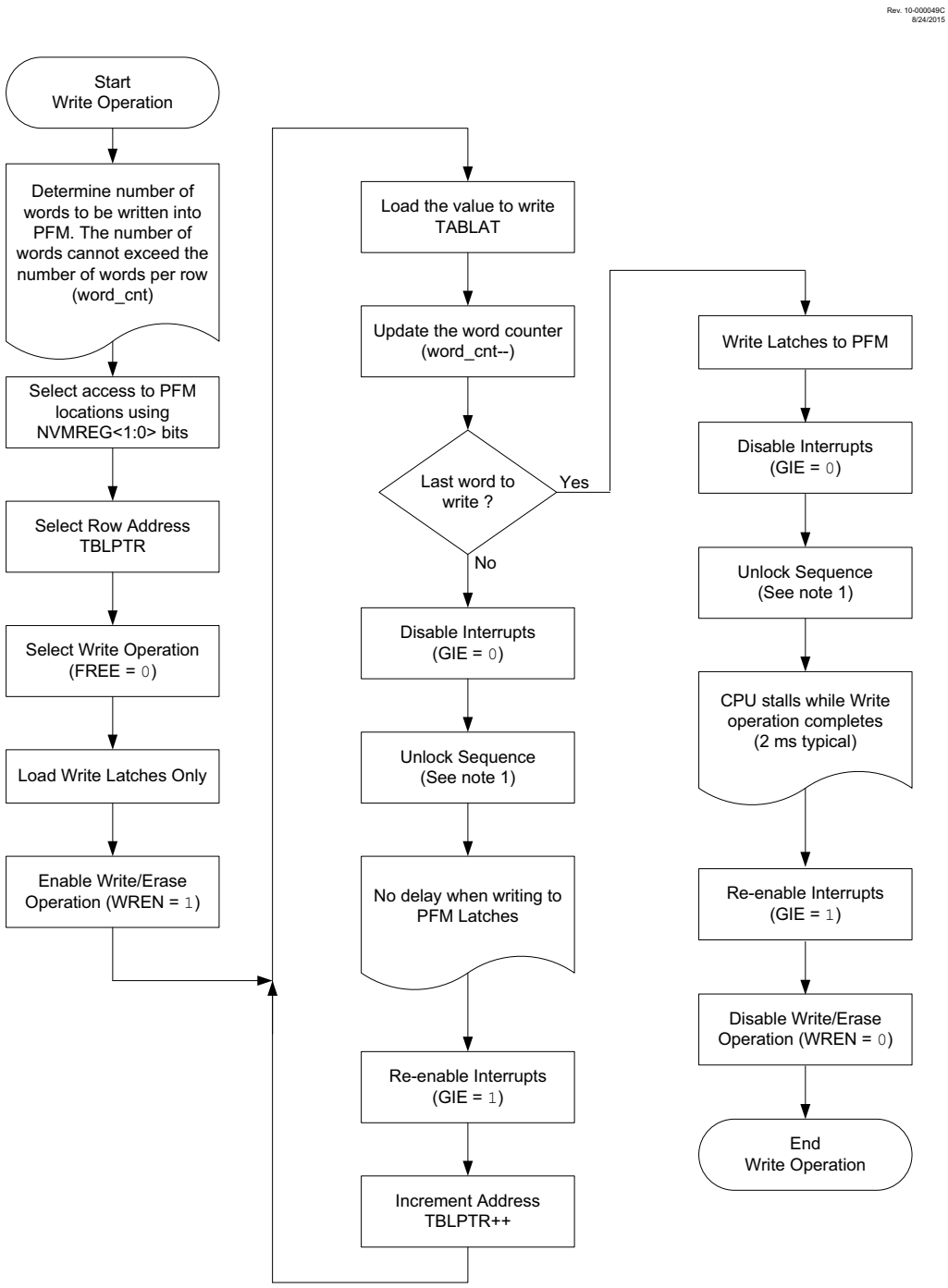

Note 1: See Figure 13-2.

EXAMPLE 13-4: WRITING TO PROGRAM FLASH MEMORY

```
; This write routine assumes the following:
; 1. 64 bytes of data are loaded, starting at the address in DATA_ADDR
; 2. Each word of data to be written is made up of two adjacent bytes in DATA_ADDR,
;    stored in little endian format
; 3. A valid starting address (the least significant bits = 00000) is loaded in ADDRH:ADDRL
; 4. ADDRH and ADDRL are located in common RAM (locations 0x70 - 0x7F)
; 5. NVM interrupts are not taken into account

        BANKSEL       NVMADRH
        MOVF          ADDRH,W
        MOVWF         NVMADRH                 ; Load initial address
        MOVF          ADDRL,W
        MOVWF         NVMADRL
        MOVLW         LOW DATA_ADDR           ; Load initial data address
        MOVWF         FSR0L
        MOVLW         HIGH DATA_ADDR
        MOVWF         FSR0H
        BCF           NVMCON1,NVMREGS         ; Set Program Flash Memory as write location
        BSF           NVMCON1,WREN            ; Enable writes
        BSF           NVMCON1,LWLO            ; Load only write latches

LOOP
        MOVIW         FSR0++
        MOVWF         NVMDATL                 ; Load first data byte
        MOVIW         FSR0++
        MOVWF         NVMDATH                 ; Load second data byte

        MOVF          NVMADRL,W
        XORLW         0x1F                    ; Check if lower bits of address are 00000
        ANDLW         0x1F                    ; and if on last of 32 addresses
        BTFSC         STATUS,Z                ; Last of 32 words?
        GOTO          START_WRITE             ; If so, go write latches into memory

        CALL          UNLOCK_SEQ              ; If not, go load latch
        INCF          NVMADRL,F               ; Increment address
        GOTO          LOOP

START_WRITE
        BCF           NVMCON1,LWLO            ; Latch writes complete, now write memory
        CALL          UNLOCK_SEQ              ; Perform required unlock sequence
        BCF           NVMCON1,WREN            ; Disable writes

UNLOCK_SEQ
        MOVLW         55h
        BCF           INTCON,GIE              ; Disable interrupts
        MOVWF         NVMCON2                 ; Begin unlock sequence
        MOVLW         AAh
        MOVWF         NVMCON2
        BSF           NVMCON1,WR
        BSF           INTCON,GIE              ; Unlock sequence complete, re-enable interrupts
        return
```

13.3.5 MODIFYING FLASH PROGRAM MEMORY

When modifying existing data in a program memory row, and data within that row must be preserved, it must first be read and saved in a RAM image. Program memory is modified using the following steps:

1. Load the starting address of the row to be modified.
2. Read the existing data from the row into a RAM image.
3. Modify the RAM image to contain the new data to be written into program memory.
4. Load the starting address of the row to be rewritten.
5. Erase the program memory row.
6. Load the write latches with data from the RAM image.
7. Initiate a programming operation.

FIGURE 13-6: FLASH PROGRAM MEMORY MODIFY FLOWCHART

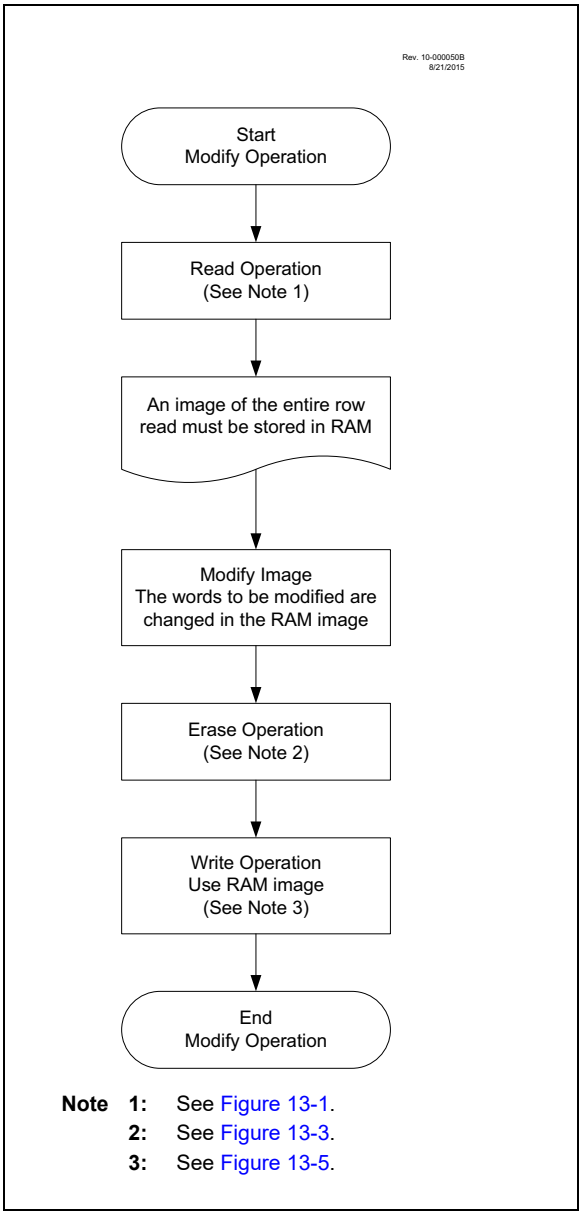

13.3.6 NVMREG ACCESS TO DEVICE INFORMATION AREA, DEVICE CONFIGURATION AREA, USER ID, DEVICE ID AND CONFIGURATION WORDS

NVMREGS can be used to access the following memory regions:

- Device Information Area (DIA)
- Device Configuration Information (DCI)
- User ID region
- Device ID and Revision ID
- Configuration Words

The value of NVMREGS is set to '1' in the NVMCON1 register to access these regions. The memory regions listed above would be pointed to by PC[15] = 1, but not all addresses reference valid data. Different access may exist for reads and writes. Refer to Table 13-3.

When read access is initiated on an address outside the parameters listed in Table 13-3, the NVMDATH: NVMDATL register pair is cleared, reading back '0's.

TABLE 13-3: NVMREGS ACCESS TO DEVICE INFORMATION AREA, DEVICE CONFIGURATION AREA, USER ID, DEVICE ID AND CONFIGURATION WORDS (NVMREGS = 1)

Address	Function	Read Access	Write Access
8000h-8003h	User IDs	Yes	Yes
8005h-8006h	Device ID/Revision ID	Yes	No
8007h-800Bh	Configuration Words 1-5	Yes	No
8100h-82FFh	DIA and DCI	Yes	No

EXAMPLE 13-5: DEVICE ID ACCESS

```
; This write routine assumes the following:
; 1.  A full row of data are loaded, starting at the address in DATA_ADDR
; 2.  Each word of data to be written is made up of two adjacent bytes in DATA_ADDR,
; stored in little endian format
; 3.  A valid starting address (the least significant bits = 00000) is loaded in ADDRH:ADDRL
; 4.  ADDRH and ADDRL are located in common RAM (locations 0x70 - 0x7F)
; 5.  NVM interrupts are not taken into account

          BANKSEL             NVMADRH
          MOVF                ADDRH,W
          MOVWF               NVMADRH                 ; Load initial address
          MOVF                ADDRL,W
          MOVWF               NVMADRL
          MOVLW               LOW DATA_ADDR           ; Load initial data address
          MOVWF               FSR0L
          MOVLW               HIGH DATA_ADDR
          MOVWF               FSR0H
          BCF                 NVMCON1,NVMREGS         ; Set PFM as write location
          BSF                 NVMCON1,WREN            ; Enable writes
          BSF                 NVMCON1,LWLO            ; Load only write latches

LOOP
          MOVIW               FSR0++
          MOVWF               NVMDATL                 ; Load first data byte
          MOVIW               FSR0++
          MOVWF               NVMDATH                 ; Load second data byte

          CALL                UNLOCK_SEQ              ; If not, go load latch
          INCF                NVMADRL,F               ; Increment address
          MOVF                NVMADRL,W
          XORLW               0x1F                    ; Check if lower bits of address are 00000
          ANDLW               0x1F                    ; and if on last of 32 addresses
          BTFSC               STATUS,Z                ; Last of 32 words?
          GOTO                START_WRITE             ; If so, go write latches into memory

          GOTO                LOOP

START_WRITE
          BCF                 NVMCON1,LWLO            ; Latch writes complete, now write memory
          CALL                UNLOCK_SEQ              ; Perform required unlock sequence
          BCF                 NVMCON1,LWLO            ; Disable writes

UNLOCK_SEQ
          MOVLW               55h
          BCF                 INTCON,GIE              ; Disable interrupts
          MOVWF               NVMCON2                 ; Begin unlock sequence
          MOVLW               AAh
          MOVWF               NVMCON2
          BSF                 NVMCON1,WR
          BSF                 INTCON,GIE              ; Unlock sequence complete, re-enable interrupts
          return
```

13.3.7 WRITE VERIFY

It is considered good programming practice to verify that program memory writes agree with the intended value. Since program memory is stored as a full row then the stored program memory contents are compared with the intended data stored in RAM after the last write is complete.

FIGURE 13-7: FLASH PROGRAM MEMORY VERIFY FLOWCHART

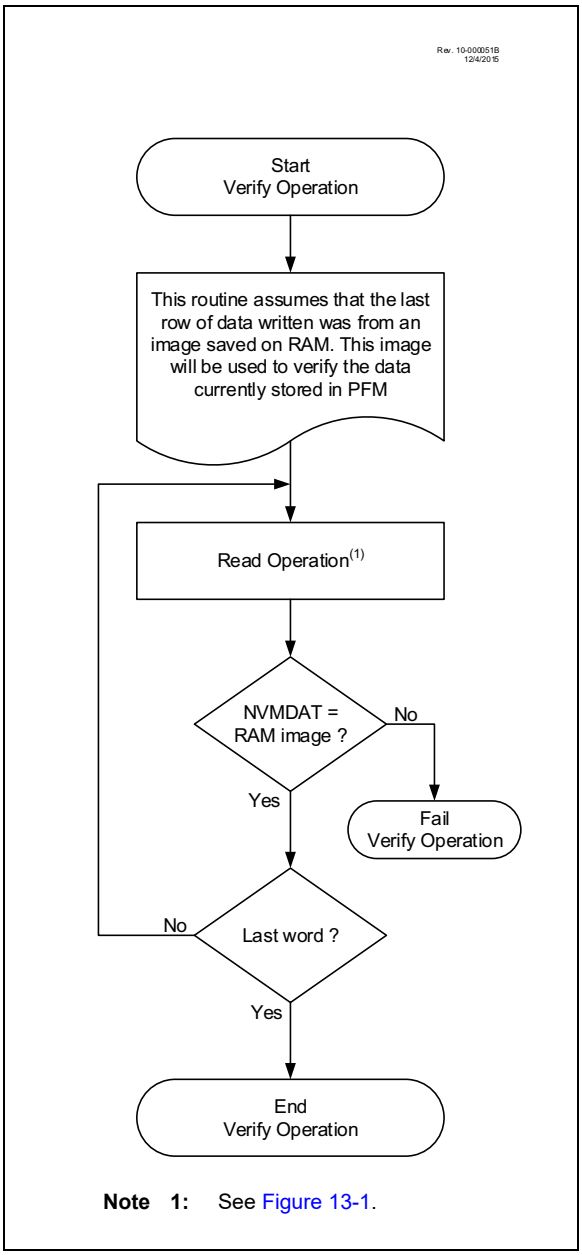

Note 1: See Figure 13-1.

13.3.8 WRERR BIT

The WRERR bit can be used to determine if a write error occurred.

WRERR will be set if one of the following conditions occurs:

- If WR is set while the NVMADRH:NMVADRL points to a write-protected address
- A Reset occurs while a self-write operation was in progress
- An unlock sequence was interrupted

The WRERR bit is normally set by hardware, but can be set by the user for test purposes. Once set, WRERR must be cleared in software.

TABLE 13-4: ACTIONS FOR PFM WHEN WR = 1

Free	LWLO	Actions for PFM when WR = 1	Comments
1	x	Erase the 32-word row of NVMADRH:NVMADRL location. See **Section 13.3.3 "NVMREG Erase of PFM"**	• If WP is enabled, WR is cleared and WRERR is set • All 32 words are erased • NVMDATH:NVMDATL is ignored
0	1	Copy NVMDATH:NVMDATL to the write latch corresponding to NVMADR LSBs. See **Section 13.3.3 "NVMREG Erase of PFM"**	• Write protection is ignored • No memory access occurs
0	0	Write the write-latch data to PFM row. See **Section 13.3.3 "NVMREG Erase of PFM"**	• If WP is enabled, WR is cleared and WRERR is set • Write latches are reset to 3FFh • NVMDATH:NVMDATL is ignored

13.4 Register Definitions: Flash Program Memory Control

REGISTER 13-1: NVMDATL: NONVOLATILE MEMORY DATA LOW BYTE REGISTER

R/W-x/u	R/W-x/u	R/W-x/u	R/W-x/u	R/W-x/u	R/W-x/u	R/W-x/u	R/W-x/u
NVMDAT[7:0]							
bit 7							bit 0

Legend:		
R = Readable bit	W = Writable bit	U = Unimplemented bit, read as ‘0’
u = Bit is unchanged	x = Bit is unknown	-n/n = Value at POR and BOR/Value at all other Resets
‘1’ = Bit is set	‘0’ = Bit is cleared	

bit 7-0 **NVMDAT[7:0]**: Read/write value for Least Significant bits of program memory

REGISTER 13-2: NVMDATH: NONVOLATILE MEMORY DATA HIGH BYTE REGISTER

U-0	U-0	R/W-x/u	R/W-x/u	R/W-x/u	R/W-x/u	R/W-x/u	R/W-x/u
—	—	NVMDAT[13:8]					
bit 7							bit 0

Legend:		
R = Readable bit	W = Writable bit	U = Unimplemented bit, read as ‘0’
u = Bit is unchanged	x = Bit is unknown	-n/n = Value at POR and BOR/Value at all other Resets
‘1’ = Bit is set	‘0’ = Bit is cleared	

bit 7-6 **Unimplemented:** Read as ‘0’

bit 5-0 **NVMDAT[13:8]**: Read/write value for Most Significant bits of program memory

REGISTER 13-3: NVMADRL: NONVOLATILE MEMORY ADDRESS LOW BYTE REGISTER

R/W-0/0	R/W-0/0	R/W-0/0	R/W-0/0	R/W-0/0	R/W-0/0	R/W-0/0	R/W-0/0
NVMADR[7:0]							
bit 7							bit 0

Legend:		
R = Readable bit	W = Writable bit	U = Unimplemented bit, read as ‘0’
u = Bit is unchanged	x = Bit is unknown	-n/n = Value at POR and BOR/Value at all other Resets
‘1’ = Bit is set	‘0’ = Bit is cleared	

bit 7-0 **NVMADR[7:0]**: Specifies the Least Significant bits for program memory address

REGISTER 13-4: NVMADRH: NONVOLATILE MEMORY ADDRESS HIGH BYTE REGISTER

U-1	R/W-0/0	R/W-0/0	R/W-0/0	R/W-0/0	R/W-0/0	R/W-0/0	R/W-0/0
—(1)	NVMADR[14:8]						
bit 7							bit 0

Legend:		
R = Readable bit	W = Writable bit	U = Unimplemented bit, read as ‘0’
u = Bit is unchanged	x = Bit is unknown	-n/n = Value at POR and BOR/Value at all other Resets
‘1’ = Bit is set	‘0’ = Bit is cleared	

bit 7 **Unimplemented:** Read as ‘1’

bit 6-0 **NVMADR[14:8]**: Specifies the Most Significant bits for program memory address

Note 1: Bit is undefined while WR = 1

REGISTER 13-5: NVMCON1: NONVOLATILE MEMORY CONTROL 1 REGISTER

U-0	R/W-0/0	R/W-0/0	R/W/HC-0/0	R/W/HC-x/q	R/W-0/0	R/S/HC-0/0	R/S/HC-0/0
—	NVMREGS	LWLO	FREE	WRERR(1,2,3)	WREN	WR(4,5,6)	RD
bit 7							bit 0

Legend:		
R = Readable bit	W = Writable bit	U = Unimplemented bit, read as ‘0’
S = Bit can only be set	x = Bit is unknown	-n/n = Value at POR and BOR/Value at all other Resets
‘1’ = Bit is set	‘0’ = Bit is cleared	HC = Bit is cleared by hardware

bit 7 **Unimplemented:** Read as ‘0’

bit 6 **NVMREGS:** Configuration Select bit
1 = Access DIA, DCI, Configuration, User ID and Device ID Registers
0 = Access PFM

bit 5 **LWLO:** Load Write Latches Only bit
When FREE = 0:
1 = The next WR command updates the write latch for this word within the row; no memory operation is initiated.
0 = The next WR command writes data or erases
Otherwise: The bit is ignored

bit 4 **FREE:** PFM Erase Enable bit
When NVMREGS:NVMADR points to a PFM location:
1 = Performs an erase operation with the next WR command; the 32-word pseudo-row containing the indicated address is erased (to all 1s) to prepare for writing.
0 = All erase operations have completed normally

bit 3 **WRERR:** Program/Erase Error Flag bit(1,2,3)
This bit is normally set by hardware.
1 = A write operation was interrupted by a Reset, interrupted unlock sequence, or WR was written to one while NVMADR points to a write-protected address.
0 = The program or erase operation completed normally

bit 2 **WREN:** Program/Erase Enable bit
1 = Allows program/erase cycles
0 = Inhibits programming/erasing of program Flash

bit 1 **WR:** Write Control bit(4,5,6)
When NVMREG:NVMADR points to a PFM location:
1 = Initiates the operation indicated by Table 13-4
0 = NVM program/erase operation is complete and inactive.

bit 0 **RD:** Read Control bit(7)
1 = Initiates a read at address = NVMADR1, and loads data to NVMDAT Read takes one instruction cycle and the bit is cleared when the operation is complete. The bit can only be set (not cleared) in software.
0 = NVM read operation is complete and inactive

Note 1: Bit is undefined while WR = 1.
2: Bit must be cleared by software; hardware will not clear this bit.
3: Bit may be written to ‘1’ by software to implement test sequences.
4: This bit can only be set by following the unlock sequence of **Section 13.3.2 “NVM Unlock Sequence”**.
5: Operations are self-timed, and the WR bit is cleared by hardware when complete.
6: Once a write operation is initiated, setting this bit to zero will have no effect.

REGISTER 13-6: NVMCON2: NONVOLATILE MEMORY CONTROL 2 REGISTER

W-0/0	W-0/0	W-0/0	W-0/0	W-0/0	W-0/0	W-0/0	W-0/0
NVMCON2[7:0]							
bit 7							bit 0

Legend:		
R = Readable bit	W = Writable bit	U = Unimplemented bit, read as ‘0’
S = Bit can only be set	x = Bit is unknown	-n/n = Value at POR and BOR/Value at all other Resets
‘1’ = Bit is set	‘0’ = Bit is cleared	

bit 7-0 **NVMCON2[7:0]:** Flash Memory Unlock Pattern bits
To unlock writes, a 55h must be written first followed by an AAh before setting the WR bit of the NVMCON1 register. The value written to this register is used to unlock the writes.

TABLE 13-5: SUMMARY OF REGISTERS ASSOCIATED WITH NONVOLATILE MEMORY (NVM)

Name	Bit 7	Bit 6	Bit 5	Bit 4	Bit 3	Bit 2	Bit 1	Bit 0	Register on Page
INTCON	GIE	PEIE	—	—	—	—	—	INTEDG	125
PIE7	—	—	NVMIE	NCO1IE	—	—	—	CWG1IE	133
PIR7	—	—	NVMIF	NCO1IF	—	—	—	CWG1IF	141
NVMCON1	—	NVMREGS	LWLO	FREE	WRERR	WREN	WR	RD	174
NVMCON2	NVMCON2[7:0]								175
NVMADRL	NVMADR[7:0]								173
NVMADRH	—(1)	NVMADR[14:8]							173
NVMDATL	NVMDAT[7:0]								173
NVMDATH	—	—	NVMDAT[13:8]						173

Legend: — = unimplemented location, read as ‘0’. Shaded cells are not used by NVM.
Note 1: Unimplemented, read as ‘1’.

14.0 I/O PORTS

TABLE 14-1: PORT AVAILABILITY PER DEVICE

Device	PORTA	PORTB	PORTC
PIC16(L)F15324	●		●
PIC16(L)F15344	●	●	●

Each port has standard registers for its operation. These registers are:

- PORTx registers (reads the levels on the pins of the device)
- LATx registers (output latch)
- TRISx registers (data direction)
- ANSELx registers (analog select)
- WPUx registers (weak pull-up)
- INLVLx (input level control)
- SLRCONx registers (slew rate)
- ODCONx registers (open-drain)

Most port pins share functions with device peripherals, both analog and digital. In general, when a peripheral is enabled on a port pin, that pin cannot be used as a general purpose output; however, the pin can still be read.

The Data Latch (LATx registers) is useful for read-modify-write operations on the value that the I/O pins are driving.

A write operation to the LATx register has the same effect as a write to the corresponding PORTx register. A read of the LATx register reads of the values held in the I/O PORT latches, while a read of the PORTx register reads the actual I/O pin value.

Ports that support analog inputs have an associated ANSELx register. When an ANSEL bit is set, the digital input buffer associated with that bit is disabled.

Disabling the input buffer prevents analog signal levels on the pin between a logic high and low from causing excessive current in the logic input circuitry. A simplified model of a generic I/O port, without the interfaces to other peripherals, is shown in Figure 14-1.

FIGURE 14-1: GENERIC I/O PORT OPERATION

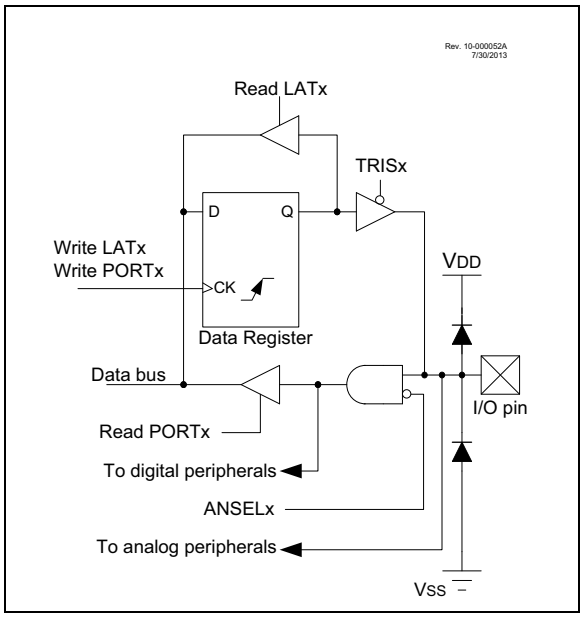

14.1 I/O Priorities

Each pin defaults to the PORT data latch after Reset. Other functions are selected with the peripheral pin select logic. See **Section 15.0 "Peripheral Pin Select (PPS) Module"** for more information.

Analog input functions, such as ADC and comparator inputs, are not shown in the peripheral pin select lists. These inputs are active when the I/O pin is set for Analog mode using the ANSELx register. Digital output functions may continue to control the pin when it is in Analog mode.

Analog outputs, when enabled, take priority over the digital outputs and force the digital output driver to the high-impedance state.

14.2 PORTA Registers

14.2.1 DATA REGISTER

PORTA is a 6-bit wide, bidirectional port. The corresponding data direction register is TRISA (Register 14-2). Setting a TRISA bit (= 1) will make the corresponding PORTA pin an input (i.e., disable the output driver). Clearing a TRISA bit (= 0) will make the corresponding PORTA pin an output (i.e., enables output driver and puts the contents of the output latch on the selected pin). Example 14.2.8 shows how to initialize PORTA.

Reading the PORTA register (Register 14-1) reads the status of the pins, whereas writing to it will write to the PORT latch. All write operations are read-modify-write operations. Therefore, a write to a port implies that the port pins are read, this value is modified and then written to the PORT data latch (LATA).

The PORT data latch LATA (Register 14-3) holds the output port data, and contains the latest value of a LATA or PORTA write.

EXAMPLE 14-1: INITIALIZING PORTA

```
; This code example illustrates
; initializing the PORTA register. The
; other ports are initialized in the same
; manner.

BANKSEL  PORTA        ;
CLRF     PORTA        ;Init PORTA
BANKSEL  LATA         ;Data Latch
CLRF     LATA         ;
BANKSEL  ANSELA       ;
CLRF     ANSELA       ;digital I/O
BANKSEL  TRISA        ;
MOVLW    B'00111000'  ;Set RA[5:3] as inputs
MOVWF    TRISA        ;and set RA[2:0] as
                      ;outputs
```

14.2.2 DIRECTION CONTROL

The TRISA register (Register 14-2) controls the PORTA pin output drivers, even when they are being used as analog inputs. The user must ensure the bits in the TRISA register are maintained set when using them as analog inputs. I/O pins configured as analog inputs always read '0'.

14.2.3 OPEN-DRAIN CONTROL

The ODCONA register (Register 14-6) controls the open-drain feature of the port. Open-drain operation is independently selected for each pin. When an ODCONA bit is set, the corresponding port output becomes an open-drain driver capable of sinking current only. When an ODCONA bit is cleared, the corresponding port output pin is the standard push-pull drive capable of sourcing and sinking current.

Note: It is not necessary to set open-drain control when using the pin for I^2C; the I^2C module controls the pin and makes the pin open-drain.

14.2.4 SLEW RATE CONTROL

The SLRCONA register (Register 14-7) controls the slew rate option for each port pin. Slew rate control is independently selectable for each port pin. When an SLRCONA bit is set, the corresponding port pin drive is slew rate limited. When an SLRCONA bit is cleared, The corresponding port pin drive slews at the maximum rate possible.

14.2.5 INPUT THRESHOLD CONTROL

The INLVLA register (Register 14-8) controls the input voltage threshold for each of the available PORTA input pins. A selection between the Schmitt Trigger CMOS or the TTL Compatible thresholds is available. The input threshold is important in determining the value of a read of the PORTA register and also the level at which an interrupt-on-change occurs, if that feature is enabled. See Table 37-4 for more information on threshold levels.

Note: Changing the input threshold selection may be performed while all peripheral modules are disabled. Changing the threshold level during the time a module is active may inadvertently generate a transition associated with an input pin, regardless of the actual voltage level on that pin.

14.2.6 ANALOG CONTROL

The ANSELA register (Register 14-4) is used to configure the Input mode of an I/O pin to analog. Setting the appropriate ANSELA bit high will cause all digital reads on the pin to be read as '0' and allow analog functions on the pin to operate correctly.

The state of the ANSELA bits has no effect on digital output functions. A pin with its TRIS bit clear and its ANSEL bit set will still operate as a digital output, but the Input mode will be analog. This can cause unexpected behavior when executing read-modify-write instructions on the affected port.

Note:	The ANSELA bits default to the Analog mode after Reset. To use any pins as digital general purpose or peripheral inputs, the corresponding ANSEL bits must be initialized to '0' by user software.

14.2.7 WEAK PULL-UP CONTROL

The WPUA register (Register 14-5) controls the individual weak pull-ups for each PORT pin.

14.2.8 PORTA FUNCTIONS AND OUTPUT PRIORITIES

Each PORTA pin is multiplexed with other functions.

Each pin defaults to the PORT latch data after Reset. Other output functions are selected with the peripheral pin select logic or by enabling an analog output, such as the DAC. See **Section 15.0 "Peripheral Pin Select (PPS) Module"** for more information.

Analog input functions, such as ADC and comparator inputs are not shown in the peripheral pin select lists. Digital output functions may continue to control the pin when it is in Analog mode.

14.3 Register Definitions: PORTA

REGISTER 14-1: PORTA: PORTA REGISTER

U-0	U-0	R/W-x/u	R/W-x/u	R-x/u	R/W-x/u	R/W-x/u	R/W-x/u
—	—	RA5	RA4	RA3	RA2	RA1	RA0
bit 7							bit 0

Legend:		
R = Readable bit	W = Writable bit	U = Unimplemented bit, read as ‘0’
u = Bit is unchanged	x = Bit is unknown	-n/n = Value at POR and BOR/Value at all other Resets
‘1’ = Bit is set	‘0’ = Bit is cleared	

bit 7-6 **Unimplemented**: Read as ‘0’

bit 5-0 **RA[5:0]**: PORTA I/O Value bits(1)
1 = Port pin is ≥ V_{IH}
0 = Port pin is ≤ V_{IL}

Note 1: Writes to PORTA are actually written to corresponding LATA register. Reads from PORTA register returns of actual I/O pin values.

REGISTER 14-2: TRISA: PORTA TRI-STATE REGISTER

U-0	U-0	R/W-1/1	R/W-1/1	U-0	R/W-1/1	R/W-1/1	R/W-1/1
—	—	TRISA5	TRISA4	—	TRISA2	TRISA1	TRISA0
bit 7							bit 0

Legend:		
R = Readable bit	W = Writable bit	U = Unimplemented bit, read as ‘0’
u = Bit is unchanged	x = Bit is unknown	-n/n = Value at POR and BOR/Value at all other Resets
‘1’ = Bit is set	‘0’ = Bit is cleared	

bit 7-6 **Unimplemented**: Read as ‘0’

bit 5-4 **TRISA[5:4]:** PORTA Tri-State Control bits
1 = PORTA pin configured as an input (tri-stated)
0 = PORTA pin configured as an output

bit 3 **Unimplemented**: Read as ‘0’

bit 2-0 **TRISA[2:0]:** PORTA Tri-State Control bits
1 = PORTA pin configured as an input (tri-stated)
0 = PORTA pin configured as an output

REGISTER 14-3: LATA: PORTA DATA LATCH REGISTER

U-0	U-0	R/W-x/u	R/W-x/u	U-0	R/W-x/u	R/W-x/u	R/W-x/u
—	—	LATA5	LATA4	—	LATA2	LATA1	LATA0
bit 7							bit 0

Legend:		
R = Readable bit	W = Writable bit	U = Unimplemented bit, read as ‘0’
u = Bit is unchanged	x = Bit is unknown	-n/n = Value at POR and BOR/Value at all other Resets
‘1’ = Bit is set	‘0’ = Bit is cleared	

bit 7-6 **Unimplemented**: Read as ‘0’

bit 5-4 **LATA[5:4]**: RA[5:4] Output Latch Value bits(1)

bit 3 **Unimplemented**: Read as ‘0’

bit 2-0 **LATA[2:0]**: RA[2:0] Output Latch Value bits(1)

Note 1: Writes to PORTA are actually written to corresponding LATA register. Reads from PORTA register returns actual I/O pin values.

REGISTER 14-4: ANSELA: PORTA ANALOG SELECT REGISTER

U-0	U-0	R/W-1/1	R/W-1/1	U-0	R/W-1/1	R/W-1/1	R/W-1/1
—	—	ANSA5	ANSA4	—	ANSA2	ANSA1	ANSA0
bit 7							bit 0

Legend:		
R = Readable bit	W = Writable bit	U = Unimplemented bit, read as ‘0’
u = Bit is unchanged	x = Bit is unknown	-n/n = Value at POR and BOR/Value at all other Resets
‘1’ = Bit is set	‘0’ = Bit is cleared	

bit 7-6 **Unimplemented**: Read as ‘0’

bit 5-4 **ANSA[5:4]**: Analog Select between Analog or Digital Function on pins RA[5:4], respectively
1 =Analog input. Pin is assigned as analog input(1). Digital input buffer disabled.
0 = Digital I/O. Pin is assigned to port or digital special function.

bit 3 **Unimplemented**: Read as ‘0’

bit 2-0 **ANSA[2:0]**: Analog Select between Analog or Digital Function on pins RA[2:0], respectively
1 = Analog input. Pin is assigned as analog input(1). Digital input buffer disabled.
0 = Digital I/O. Pin is assigned to port or digital special function.

Note 1: When setting a pin to an analog input, the corresponding TRIS bit must be set to Input mode to allow external control of the voltage on the pin.

REGISTER 14-5: WPUA: WEAK PULL-UP PORTA REGISTER

U-0	U-0	R/W-0/0	R/W-0/0	R/W-0/0	R/W-0/0	R/W-0/0	R/W-0/0
—	—	WPUA5	WPUA4	WPUA3(1)	WPUA2	WPUA1	WPUA0
bit 7							bit 0

Legend:		
R = Readable bit	W = Writable bit	U = Unimplemented bit, read as ‘0’
u = Bit is unchanged	x = Bit is unknown	-n/n = Value at POR and BOR/Value at all other Resets
‘1’ = Bit is set	‘0’ = Bit is cleared	

bit 7-6 **Unimplemented**: Read as ‘0’

bit 5-0 **WPUA[5:0]**: Weak Pull-up Register bits(1)
1 = Pull-up enabled
0 = Pull-up disabled

Note 1: If MCLRE = 1, the weak pull-up in RA3 is always enabled; bit WPUA3 is not affected.
2: The weak pull-up device is automatically disabled if the pin is configured as an output.

REGISTER 14-6: ODCONA: PORTA OPEN-DRAIN CONTROL REGISTER

U-0	U-0	R/W-0/0	R/W-0/0	U-0	R/W-0/0	R/W-0/0	R/W-0/0
—	—	ODCA5	ODCA4	—	ODCA2	ODCA1	ODCA0
bit 7							bit 0

Legend:		
R = Readable bit	W = Writable bit	U = Unimplemented bit, read as ‘0’
u = Bit is unchanged	x = Bit is unknown	-n/n = Value at POR and BOR/Value at all other Resets
‘1’ = Bit is set	‘0’ = Bit is cleared	

bit 7-6 **Unimplemented**: Read as ‘0’

bit 5-4 **ODCA[5:4]:** PORTA Open-Drain Enable bits
For RA[5:4] pins, respectively
1 = Port pin operates as open-drain drive (sink current only)
0 = Port pin operates as standard push-pull drive (source and sink current)

bit 3 **Unimplemented**: Read as ‘0’

bit 2-0 **ODCA[2:0]:** PORTA Open-Drain Enable bits
For RA[2:0] pins, respectively
1 = Port pin operates as open-drain drive (sink current only)
0 = Port pin operates as standard push-pull drive (source and sink current)

REGISTER 14-7: SLRCONA: PORTA SLEW RATE CONTROL REGISTER

U-0	U-0	R/W-1/1	R/W-1/1	U-0	R/W-1/1	R/W-1/1	R/W-1/1
—	—	SLRA5	SLRA4	—	SLRA2	SLRA1	SLRA0
bit 7							bit 0

Legend:		
R = Readable bit	W = Writable bit	U = Unimplemented bit, read as ‘0’
u = Bit is unchanged	x = Bit is unknown	-n/n = Value at POR and BOR/Value at all other Resets
‘1’ = Bit is set	‘0’ = Bit is cleared	

bit 7-6 **Unimplemented**: Read as ‘0’

bit 5-4 **SLRA[5:4]:** PORTA Slew Rate Enable bits
For RA[5:4] pins, respectively
1 = Port pin slew rate is limited
0 = Port pin slews at maximum rate

bit 3 **Unimplemented**: Read as ‘0’

bit 2-0 **SLRA[2:0]:** PORTA Slew Rate Enable bits
For RA[2:0] pins, respectively
1 = Port pin slew rate is limited
0 = Port pin slews at maximum rate

REGISTER 14-8: INLVLA: PORTA INPUT LEVEL CONTROL REGISTER

U-0	U-0	R/W-1/1	R/W-1/1	R/W-1/1	R/W-1/1	R/W-1/1	R/W-1/1
—	—	INLVLA5	INLVLA4	INLVLA3	INLVLA2	INLVLA1	INLVLA0
bit 7							bit 0

Legend:		
R = Readable bit	W = Writable bit	U = Unimplemented bit, read as ‘0’
u = Bit is unchanged	x = Bit is unknown	-n/n = Value at POR and BOR/Value at all other Resets
‘1’ = Bit is set	‘0’ = Bit is cleared	

bit 7-6 **Unimplemented**: Read as ‘0’

bit 5-0 **INLVLA[5:0]:** PORTA Input Level Select bits
For RA[5:0] pins, respectively
1 = ST input used for PORT reads and interrupt-on-change
0 = TTL input used for PORT reads and interrupt-on-change

TABLE 14-2: SUMMARY OF REGISTERS ASSOCIATED WITH PORTA

Name	Bit 7	Bit 6	Bit 5	Bit 4	Bit 3	Bit 2	Bit 1	Bit 0	Register on Page
PORTA	—	—	RA5	RA4	RA3	RA2	RA1	RA0	179
TRISA	—	—	TRISA5	TRISA4	—	TRISA2	TRISA1	TRISA0	179
LATA	—	—	LATA5	LATA4	—	LATA2	LATA1	LATA0	180
ANSELA	—	—	ANSA5	ANSA4	—	ANSA2	ANSA1	ANSA0	180
WPUA	—	—	WPUA5	WPUA4	WPUA3	WPUA2	WPUA1	WPUA0	181
ODCONA	—	—	ODCA5	ODCA4	—	ODCA2	ODCA1	ODCA0	181
SLRCONA	—	—	SLRA5	SLRA4	—	SLRA2	SLRA1	SLRA0	182
INLVLA	—	—	INLVLA5	INLVLA4	INLVLA3	INLVLA2	INLVLA1	INLVLA0	182

Legend: x = unknown, u = unchanged, – = unimplemented locations read as '0'. Shaded cells are not used by PORTA.

14.4 PORTB Registers (PIC16(L)F15344 only)

14.4.1 DATA REGISTER

PORTB is a 4-bit wide, bidirectional port. The corresponding data direction register is TRISB (Register 14-10). Setting a TRISB bit (= 1) will make the corresponding PORTB pin an input (i.e., disable the output driver). Clearing a TRISB bit (= 0) will make the corresponding PORTB pin an output (i.e., enables output driver and puts the contents of the output latch on the selected pin). Figure 14-1 shows how to initialize PORTB.

Reading the PORTB register (Register 14-9) reads the status of the pins, whereas writing to it will write to the PORT latch. All write operations are read-modify-write operations. Therefore, a write to a port implies that the port pins are read, this value is modified and then written to the PORT data latch (LATB).

The PORT data latch LATB (Register 14-11) holds the output port data, and contains the latest value of a LATB or PORTB write.

14.4.2 DIRECTION CONTROL

The TRISB register (Register 14-10) controls the PORTB pin output drivers, even when they are being used as analog inputs. The user must ensure the bits in the TRISB register are maintained set when using them as analog inputs. I/O pins configured as analog inputs always read '0'.

14.4.3 OPEN-DRAIN CONTROL

The ODCONB register (Register 14-14) controls the open-drain feature of the port. Open-drain operation is independently selected for each pin. When an ODCONB bit is set, the corresponding port output becomes an open-drain driver capable of sinking current only. When an ODCONB bit is cleared, the corresponding port output pin is the standard push-pull drive capable of sourcing and sinking current.

Note:	It is not necessary to set open-drain control when using the pin for I^2C; the I^2C module controls the pin and makes the pin open-drain.

14.4.4 SLEW RATE CONTROL

The SLRCONB register (Register 14-15) controls the slew rate option for each port pin. Slew rate control is independently selectable for each port pin. When an SLRCONB bit is set, the corresponding port pin drive is slew rate limited. When an SLRCONB bit is cleared, The corresponding port pin drive slews at the maximum rate possible.

14.4.5 INPUT THRESHOLD CONTROL

The INLVLB register (Register 14-8) controls the input voltage threshold for each of the available PORTB input pins. A selection between the Schmitt Trigger CMOS or the TTL Compatible thresholds is available. The input threshold is important in determining the value of a read of the PORTB register and also the level at which an interrupt-on-change occurs, if that feature is enabled. See Table 37-4 for more information on threshold levels.

Note:	Changing the input threshold selection may be performed while all peripheral modules are disabled. Changing the threshold level during the time a module is active may inadvertently generate a transition associated with an input pin, regardless of the actual voltage level on that pin.

14.4.6 ANALOG CONTROL

The ANSELB register (Register 14-12) is used to configure the Input mode of an I/O pin to analog. Setting the appropriate ANSELA bit high will cause all digital reads on the pin to be read as '0' and allow analog functions on the pin to operate correctly.

The state of the ANSELB bits has no effect on digital output functions. A pin with its TRIS bit clear and its ANSEL bit set will still operate as a digital output, but the Input mode will be analog. This can cause unexpected behavior when executing read-modify-write instructions on the affected port.

Note:	The ANSELB bits default to the Analog mode after Reset. To use any pins as digital general purpose or peripheral inputs, the corresponding ANSEL bits must be initialized to '0' by user software.

14.4.7 WEAK PULL-UP CONTROL

The WPUB register (Register 14-5) controls the individual weak pull-ups for each PORT pin.

14.4.8 PORTB FUNCTIONS AND OUTPUT PRIORITIES

Each PORTB pin is multiplexed with other functions.

Each pin defaults to the PORT latch data after Reset. Other output functions are selected with the peripheral pin select logic or by enabling an analog output, such as the DAC. See **Section 15.0 "Peripheral Pin Select (PPS) Module"** for more information.

Analog input functions, such as ADC and comparator inputs are not shown in the peripheral pin select lists. Digital output functions may continue to control the pin when it is in Analog mode.

14.5 Register Definitions: PORTB

REGISTER 14-9: PORTB: PORTB REGISTER

R/W-x/u	R/W-x/u	R/W-x/u	R/W-x/u	U-0	U-0	U-0	U-0
RB7	RB6	RB5	RB4	—	—	—	—
bit 7							bit 0

Legend:		
R = Readable bit	W = Writable bit	U = Unimplemented bit, read as ‘0’
u = Bit is unchanged	x = Bit is unknown	-n/n = Value at POR and BOR/Value at all other Resets
‘1’ = Bit is set	‘0’ = Bit is cleared	

bit 7-4 **RB[7:4]**: PORTB I/O Value bits(1)
1 = Port pin is ≥ V_{IH}
0 = Port pin is ≤ V_{IL}

bit 3-0 **Unimplemented**: Read as ‘0’

Note 1: Writes to PORTB are actually written to corresponding LATB register. The actual I/O pin values are read from the PORTB register.

REGISTER 14-10: TRISB: PORTB TRI-STATE REGISTER

R/W-1/1	R/W-1/1	R/W-1/1	R/W-1/1	U-0	U-0	U-0	U-0
TRISB7	TRISB6	TRISB5	TRISB4	—	—	—	—
bit 7							bit 0

Legend:		
R = Readable bit	W = Writable bit	U = Unimplemented bit, read as ‘0’
u = Bit is unchanged	x = Bit is unknown	-n/n = Value at POR and BOR/Value at all other Resets
‘1’ = Bit is set	‘0’ = Bit is cleared	

bit 7-4 **TRISB[7:4]:** PORTB Tri-State Control bit
1 = PORTB pin configured as an input (tri-stated)
0 = PORTB pin configured as an output

bit 3-0 **Unimplemented**: Read as ‘0’

REGISTER 14-11: LATB: PORTB DATA LATCH REGISTER

R/W-x/u	R/W-x/u	R/W-x/u	R/W-x/u	U-0	U-0	U-0	U-0
LATB7	LATB6	LATB5	LATB4	—	—	—	—
bit 7							bit 0

Legend:		
R = Readable bit	W = Writable bit	U = Unimplemented bit, read as ‘0’
u = Bit is unchanged	x = Bit is unknown	-n/n = Value at POR and BOR/Value at all other Resets
‘1’ = Bit is set	‘0’ = Bit is cleared	

bit 7-4 **LATB[7:4]**: RB[7:4] Output Latch Value bits(1)

bit 3-0 **Unimplemented**: Read as ‘0’

Note 1: Writes to PORTB are actually written to corresponding LATB register. Reads from PORTB register returns actual I/O pin values.

REGISTER 14-12: ANSELB: PORTB ANALOG SELECT REGISTER

R/W-1/1	R/W-1/1	R/W-1/1	R/W-1/1	U-0	U-0	U-0	U-0
ANSB7	ANSB6	ANSB5	ANSB4	—	—	—	—
bit 7							bit 0

Legend:		
R = Readable bit	W = Writable bit	U = Unimplemented bit, read as ‘0’
u = Bit is unchanged	x = Bit is unknown	-n/n = Value at POR and BOR/Value at all other Resets
‘1’ = Bit is set	‘0’ = Bit is cleared	

bit 7-4 **ANSB[7:4]**: Analog Select between Analog or Digital Function on pins RB[7:4], respectively
1 = Analog input. Pin is assigned as analog input(1). Digital input buffer disabled.
0 = Digital I/O. Pin is assigned to port or digital special function.

bit 3-0 **Unimplemented**: Read as ‘0’

Note 1: When setting a pin to an analog input, the corresponding TRIS bit must be set to Input mode to allow external control of the voltage on the pin.

REGISTER 14-13: WPUB: WEAK PULL-UP PORTB REGISTER

R/W-0/0	R/W-0/0	R/W-0/0	R/W-0/0	U-0	U-0	U-0	U-0
WPUB7	WPUB6	WPUB5	WPUB4	—	—	—	—
bit 7							bit 0

Legend:		
R = Readable bit	W = Writable bit	U = Unimplemented bit, read as ‘0’
u = Bit is unchanged	x = Bit is unknown	-n/n = Value at POR and BOR/Value at all other Resets
‘1’ = Bit is set	‘0’ = Bit is cleared	

bit 7-4 **WPUB[7:4]**: Weak Pull-up Register bits
1 = Pull-up enabled
0 = Pull-up disabled

bit 3-0 **Unimplemented**: Read as ‘0’

REGISTER 14-14: ODCONB: PORTB OPEN-DRAIN CONTROL REGISTER

R/W-0/0	R/W-0/0	R/W-0/0	R/W-0/0	U-0	U-0	U-0	U-0
ODCB7	ODCB6	ODCB5	ODCB4	—	—	—	—
bit 7							bit 0

Legend:		
R = Readable bit	W = Writable bit	U = Unimplemented bit, read as ‘0’
u = Bit is unchanged	x = Bit is unknown	-n/n = Value at POR and BOR/Value at all other Resets
‘1’ = Bit is set	‘0’ = Bit is cleared	

bit 7-4 **ODCB[7:4]:** PORTB Open-Drain Enable bits
For RB[7:4] pins, respectively
1 = Port pin operates as open-drain drive (sink current only)
0 = Port pin operates as standard push-pull drive (source and sink current)

bit 3-0 **Unimplemented**: Read as ‘0’

REGISTER 14-15: SLRCONB: PORTB SLEW RATE CONTROL REGISTER

R/W-1/1	R/W-1/1	R/W-1/1	R/W-1/1	U-0	U-0	U-0	U-0
SLRB7	SLRB6	SLRB5	SLRB4	—	—	—	—
bit 7							bit 0

Legend:		
R = Readable bit	W = Writable bit	U = Unimplemented bit, read as ‘0’
u = Bit is unchanged	x = Bit is unknown	-n/n = Value at POR and BOR/Value at all other Resets
‘1’ = Bit is set	‘0’ = Bit is cleared	

bit 7-4 **SLRB[7:4]:** PORTB Slew Rate Enable bits
For RB[7:4] pins, respectively
1 = Port pin slew rate is limited
0 = Port pin slews at maximum rate

bit 3-0 **Unimplemented**: Read as ‘0’

REGISTER 14-16: INLVLB: PORTB INPUT LEVEL CONTROL REGISTER

R/W-1/1	R/W-1/1	R/W-1/1	R/W-1/1	U-0	U-0	U-0	U-0
INLVLB7	INLVLB6	INLVLB5	INLVLB4	—	—	—	—
bit 7							bit 0

Legend:		
R = Readable bit	W = Writable bit	U = Unimplemented bit, read as ‘0’
u = Bit is unchanged	x = Bit is unknown	-n/n = Value at POR and BOR/Value at all other Resets
‘1’ = Bit is set	‘0’ = Bit is cleared	

bit 7-4 **INLVLB[7:4]:** PORTB Input Level Select bits
For RB[7:4] pins, respectively
1 = ST input used for PORT reads and interrupt-on-change
0 = TTL input used for PORT reads and interrupt-on-change

bit 3-0 **Unimplemented**: Read as ‘0’

TABLE 14-3: SUMMARY OF REGISTERS ASSOCIATED WITH PORTB

Name	Bit 7	Bit 6	Bit 5	Bit 4	Bit 3	Bit 2	Bit 1	Bit 0	Register on Page
PORTB	RB7	RB6	RB5	RB4	—	—	—	—	185
TRISB	TRISB7	TRISB6	TRISB5	TRISB4	—	—	—	—	185
LATB	LATB7	LATB6	LATB5	LATB4	—	—	—	—	186
ANSELB	ANSB7	ANSB6	ANSB5	ANSB4	—	—	—	—	186
WPUB	WPUB7	WPUB6	WPUB5	WPUB4	—	—	—	—	187
ODCONB	ODCB7	ODCB6	ODCB5	ODCB4	—	—	—	—	187
SLRCONB	SLRB7	SLRB6	SLRB5	SLRB4	—	—	—	—	188
INLVLB	INLVLB7	INLVLB6	INLVLB5	INLVLB4	—	—	—	—	188

Legend: x = unknown, u = unchanged, – = unimplemented locations read as ‘0’. Shaded cells are not used by PORTB.

14.6 PORTC Registers

14.6.1 DATA REGISTER

PORTC is a 6 to 8-bit wide bidirectional port. The corresponding data direction register is TRISC (Register 14-18). Setting a TRISC bit (= 1) will make the corresponding PORTC pin an input (i.e., put the corresponding output driver in a High-Impedance mode). Clearing a TRISC bit (= 0) will make the corresponding PORTC pin an output (i.e., enable the output driver and put the contents of the output latch on the selected pin). Figure 14-1 shows how to initialize an I/O port.

Reading the PORTC register (Register 14-17) reads the status of the pins, whereas writing to it will write to the PORT latch. All write operations are read-modify-write operations. Therefore, a write to a port implies that the port pins are read, this value is modified and then written to the PORT data latch (LATC).

The PORT data latch LATC (Register 14-19) holds the output port data, and contains the latest value of a LATC or PORTC write.

14.6.2 DIRECTION CONTROL

The TRISC register (Register 14-18) controls the PORTC pin output drivers, even when they are being used as analog inputs. The user must ensure the bits in the TRISC register are maintained set when using them as analog inputs. I/O pins configured as analog inputs always read '0'.

14.6.3 OPEN-DRAIN CONTROL

The ODCONC register (Register 14-22) controls the open-drain feature of the port. Open-drain operation is independently selected for each pin. When an ODCONC bit is set, the corresponding port output becomes an open-drain driver capable of sinking current only. When an ODCONC bit is cleared, the corresponding port output pin is the standard push-pull drive capable of sourcing and sinking current.

Note:	It is not necessary to set open-drain control when using the pin for I^2C; the I^2C module controls the pin and makes the pin open-drain.

14.6.4 SLEW RATE CONTROL

The SLRCONC register (Register 14-23) controls the slew rate option for each port pin. Slew rate control is independently selectable for each port pin. When an SLRCONC bit is set, the corresponding port pin drive is slew rate limited. When an SLRCONC bit is cleared, The corresponding port pin drive slews at the maximum rate possible.

14.6.5 INPUT THRESHOLD CONTROL

The INLVLC register (Register 14-24) controls the input voltage threshold for each of the available PORTC input pins. A selection between the Schmitt Trigger CMOS or the TTL Compatible thresholds is available. The input threshold is important in determining the value of a read of the PORTC register and also the level at which an interrupt-on-change occurs, if that feature is enabled. See Table 37-4 for more information on threshold levels.

Note:	Changing the input threshold selection may be performed while all peripheral modules are disabled. Changing the threshold level during the time a module is active may inadvertently generate a transition associated with an input pin, regardless of the actual voltage level on that pin.

14.6.6 ANALOG CONTROL

The ANSELC register (Register 14-20) is used to configure the Input mode of an I/O pin to analog. Setting the appropriate ANSELC bit high will cause all digital reads on the pin to be read as '0' and allow analog functions on the pin to operate correctly.

The state of the ANSELC bits has no effect on digital output functions. A pin with TRIS clear and ANSELC set will still operate as a digital output, but the Input mode will be analog. This can cause unexpected behavior when executing read-modify-write instructions on the affected port.

Note:	The ANSELC bits default to the Analog mode after Reset. To use any pins as digital general purpose or peripheral inputs, the corresponding ANSEL bits must be initialized to '0' by user software.

14.6.7 WEAK PULL-UP CONTROL

The WPUC register (Register 14-21) controls the individual weak pull-ups for each port pin.

14.6.8 PORTC FUNCTIONS AND OUTPUT PRIORITIES

Each pin defaults to the PORT latch data after Reset. Other output functions are selected with the peripheral pin select logic. See **Section 15.0 "Peripheral Pin Select (PPS) Module"** for more information.

Analog input functions, such as ADC and comparator inputs, are not shown in the peripheral pin select lists. Digital output functions may continue to control the pin when it is in Analog mode.

14.7 Register Definitions: PORTC

REGISTER 14-17: PORTC: PORTC REGISTER

R/W-x/u	R/W-x/u	R/W-x/u	R/W-x/u	R/W-x/u	R/W-x/u	R/W-x/u	R/W-x/u
RC7(2)	RC6(2)	RC5	RC4	RC3	RC2	RC1	RC0
bit 7							bit 0

Legend:		
R = Readable bit	W = Writable bit	U = Unimplemented bit, read as ‘0’
u = Bit is unchanged	x = Bit is unknown	-n/n = Value at POR and BOR/Value at all other Resets
‘1’ = Bit is set	‘0’ = Bit is cleared	

bit 7-0 **RC[7:0]**: PORTC General Purpose I/O Pin bits(1)
1 = Port pin is ≥ V_{IH}
0 = Port pin is ≤ V_{IL}

Note 1: Writes to PORTC are actually written to corresponding LATC register. The actual I/O pin values are read from the PORTC register.
2: Present on PIC16(L)F15344 only.

REGISTER 14-18: TRISC: PORTC TRI-STATE REGISTER

R/W-1/1	R/W-1/1	R/W-1/1	R/W-1/1	R/W-1/1	R/W-1/1	R/W-1/1	R/W-1/1
TRISC7(1)	TRISC6(1)	TRISC5	TRISC4	TRISC3	TRISC2	TRISC1	TRISC0
bit 7							bit 0

Legend:		
R = Readable bit	W = Writable bit	U = Unimplemented bit, read as ‘0’
u = Bit is unchanged	x = Bit is unknown	-n/n = Value at POR and BOR/Value at all other Resets
‘1’ = Bit is set	‘0’ = Bit is cleared	

bit 7-0 **TRISC[7:0]:** PORTC Tri-State Control bits
1 = PORTC pin configured as an input (tri-stated)
0 = PORTC pin configured as an output

Note 1: Present on PIC16(L)F15344 only.

REGISTER 14-19: LATC: PORTC DATA LATCH REGISTER

R/W-x/u	R/W-x/u	R/W-x/u	R/W-x/u	R/W-x/u	R/W-x/u	R/W-x/u	R/W-x/u
LATC7(2)	LATC6(2)	LATC5	LATC4	LATC3	LATC2	LATC1	LATC0
bit 7							bit 0

Legend:		
R = Readable bit	W = Writable bit	U = Unimplemented bit, read as ‘0’
u = Bit is unchanged	x = Bit is unknown	-n/n = Value at POR and BOR/Value at all other Resets
‘1’ = Bit is set	‘0’ = Bit is cleared	

bit 7-0 **LATC[7:0]**: PORTC Output Latch Value bits(1)

Note 1: Writes to PORTC are actually written to corresponding LATC register. The actual I/O pin values are read from the PORTC register.
2: Present on PIC16(L)F15344 only.

REGISTER 14-20: ANSELC: PORTC ANALOG SELECT REGISTER

R/W-1/1	R/W-1/1	R/W-1/1	R/W-1/1	R/W-1/1	R/W-1/1	R/W-1/1	R/W-1/1
ANSC7(2)	ANSC6(2)	ANSC5	ANSC4	ANSC3	ANSC2	ANSC1	ANSC0
bit 7							bit 0

Legend:		
R = Readable bit	W = Writable bit	U = Unimplemented bit, read as ‘0’
u = Bit is unchanged	x = Bit is unknown	-n/n = Value at POR and BOR/Value at all other Resets
‘1’ = Bit is set	‘0’ = Bit is cleared	

bit 7-0 **ANSC[7:0]**: Analog Select between Analog or Digital Function on Pins RC[7:0], respectively(1)
1 = Analog input. Pin is assigned as analog input(1). Digital input buffer disabled.
0 = Digital I/O. Pin is assigned to port or digital special function.

Note 1: When setting a pin to an analog input, the corresponding TRIS bit must be set to Input mode to allow external control of the voltage on the pin.
2: Present on PIC16(L)F15344 only.

REGISTER 14-21: WPUC: WEAK PULL-UP PORTC REGISTER

R/W-0/0	R/W-0/0	R/W-0/0	R/W-0/0	R/W-0/0	R/W-0/0	R/W-0/0	R/W-0/0
WPUC7(1)	WPUC6(1)	WPUC5	WPUC4	WPUC3	WPUC2	WPUC1	WPUC0
bit 7							bit 0

Legend:		
R = Readable bit	W = Writable bit	U = Unimplemented bit, read as ‘0’
u = Bit is unchanged	x = Bit is unknown	-n/n = Value at POR and BOR/Value at all other Resets
‘1’ = Bit is set	‘0’ = Bit is cleared	

bit 7-0 **WPUC[7:0]**: Weak Pull-up Register bits
1 = Pull-up enabled
0 = Pull-up disabled

Note 1: Present on PIC16(L)F15344 only.

REGISTER 14-22: ODCONC: PORTC OPEN-DRAIN CONTROL REGISTER

R/W-0/0	R/W-0/0	R/W-0/0	R/W-0/0	R/W-0/0	R/W-0/0	R/W-0/0	R/W-0/0
ODCC7(1)	ODCC6(1)	ODCC5	ODCC4	ODCC3	ODCC2	ODCC1	ODCC0
bit 7							bit 0

Legend:		
R = Readable bit	W = Writable bit	U = Unimplemented bit, read as ‘0’
u = Bit is unchanged	x = Bit is unknown	-n/n = Value at POR and BOR/Value at all other Resets
‘1’ = Bit is set	‘0’ = Bit is cleared	

bit 7-0 **ODCC[7:0]:** PORTC Open-Drain Enable bits
For RC[7:0] pins, respectively
1 = Port pin operates as open-drain drive (sink current only)
0 = Port pin operates as standard push-pull drive (source and sink current)

Note 1: Present on PIC16(L)F15344 only.

REGISTER 14-23: SLRCONC: PORTC SLEW RATE CONTROL REGISTER

R/W-1/1	R/W-1/1	R/W-1/1	R/W-1/1	R/W-1/1	R/W-1/1	R/W-1/1	R/W-1/1
SLRC7(1)	SLRC6(1)	SLRC5	SLRC4	SLRC3	SLRC2	SLRC1	SLRC0
bit 7							bit 0

Legend:		
R = Readable bit	W = Writable bit	U = Unimplemented bit, read as ‘0’
u = Bit is unchanged	x = Bit is unknown	-n/n = Value at POR and BOR/Value at all other Resets
‘1’ = Bit is set	‘0’ = Bit is cleared	

bit 7-0 **SLRC[7:0]:** PORTC Slew Rate Enable bits
For RC[7:0] pins, respectively
1 = Port pin slew rate is limited
0 = Port pin slews at maximum rate

Note 1: Present on PIC16(L)F15344 only.

REGISTER 14-24: INLVLC: PORTC INPUT LEVEL CONTROL REGISTER

R/W-1/1	R/W-1/1	R/W-1/1	R/W-1/1	R/W-1/1	R/W-1/1	R/W-1/1	R/W-1/1
INLVLC7(1)	INLVLC6(1)	INLVLC5	INLVLC4	INLVLC3	INLVLC2	INLVLC1	INLVLC0
bit 7							bit 0

Legend:		
R = Readable bit	W = Writable bit	U = Unimplemented bit, read as ‘0’
u = Bit is unchanged	x = Bit is unknown	-n/n = Value at POR and BOR/Value at all other Resets
‘1’ = Bit is set	‘0’ = Bit is cleared	

bit 7-0 **INLVLC[7:0]:** PORTC Input Level Select bits
For RC[7:0] pins, respectively
1 = ST input used for PORT reads and interrupt-on-change
0 = TTL input used for PORT reads and interrupt-on-change

Note 1: Present on PIC16(L)F15344 only.

TABLE 14-4: SUMMARY OF REGISTERS ASSOCIATED WITH PORTC

Name	Bit 7	Bit 6	Bit 5	Bit 4	Bit 3	Bit 2	Bit 1	Bit 0	Register on Page
PORTC	RC7(1)	RC6(1)	RC5	RC4	RC3	RC2	RC1	RC0	190
TRISC	TRISC7(1)	TRISC6(1)	TRISC5	TRISC4	TRISC3	TRISC2	TRISC1	TRISC0	190
LATC	LATC7(1)	LATC6(1)	LATC5	LATC4	LATC3	LATC2	LATC1	LATC0	190
ANSELC	ANSC7(1)	ANSC6(1)	ANSC5	ANSC4	ANSC3	ANSC2	ANSC1	ANSC0	191
WPUC	WPUC7(1)	WPUC6(1)	WPUC5	WPUC4	WPUC3	WPUC2	WPUC1	WPUC0	191
ODCONC	ODCC7(1)	ODCC6(1)	ODCC5	ODCC4	ODCC3	ODCC2	ODCC1	ODCC0	192
SLRCONC	SLRC7(1)	SLRC6(1)	SLRC5	SLRC4	SLRC3	SLRC2	SLRC1	SLRC0	192
INLVLC	INLVLC7(1)	INLVLC6(1)	INLVLC5	INLVLC4	INLVLC3	INLVLC2	INLVLC1	INLVLC0	192

Legend: – = unimplemented locations read as '0'. Shaded cells are not used by PORTC.
Note 1: Present on PIC16(L)F15344 only.

15.0 PERIPHERAL PIN SELECT (PPS) MODULE

The Peripheral Pin Select (PPS) module connects peripheral inputs and outputs to the device I/O pins. Only digital signals are included in the selections.

All analog inputs and outputs remain fixed to their assigned pins. Input and output selections are independent as shown in the simplified block diagram Figure 15-1.

FIGURE 15-1: SIMPLIFIED PPS BLOCK DIAGRAM

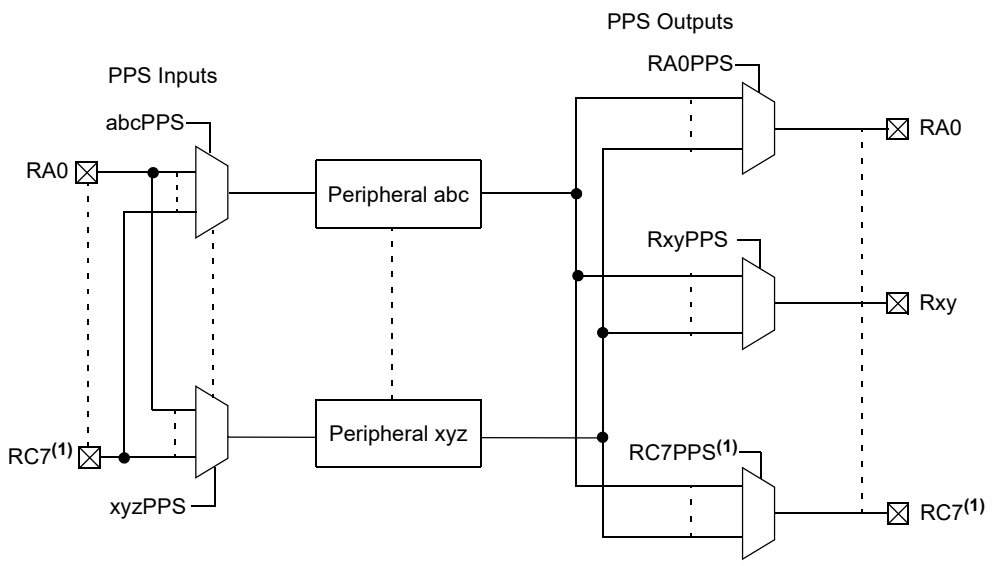

Note: Not available on 14-Pin devices.

15.1 PPS Inputs

Each peripheral has a PPS register with which the inputs to the peripheral are selected. Inputs include the device pins.

Although every peripheral has its own PPS input selection register, the selections are identical for every peripheral as shown in Register 15-1.

Note:	The notation “xxx” in the register name is a place holder for the peripheral identifier. For example, CLC1PPS.

15.2 PPS Outputs

Each I/O pin has a PPS register with which the pin output source is selected. With few exceptions, the port TRIS control associated with that pin retains control over the pin output driver. Peripherals that control the pin output driver as part of the peripheral operation will override the TRIS control as needed. These peripherals are (see **Section 15.3 “Bidirectional Pins”**):

- EUSART (synchronous operation)
- MSSP (I^2C)

Although every pin has its own PPS peripheral selection register, the selections are identical for every pin as shown in Register 15-2.

Note:	The notation “Rxy” is a place holder for the pin port and bit identifiers. For example, x and y for PORTA bit 0 would be A and 0, respectively, resulting in the pin PPS output selection register RA0PPS.

TABLE 15-1: PPS INPUT SIGNAL ROUTING OPTIONS (PIC16(L)F15324)

INPUT SIGNAL NAME	Input Register Name	Default Location at POR	Reset Value (xxxPPS[4:0])	Remappable to Pins of PORTx	
				PIC16(L)F15324	
				PORTA	PORTC
INT	INTPPS	RA2	00010	●	●
T0CKI	T0CKIPPS	RA2	00010	●	●
T1CKI	T1CKIPSS	RA5	00101	●	●
T1G	T1GPPS	RA4	00100	●	●
T2IN	T2INPPS	RA5	00101	●	●
CCP1	CCP1PPS	RC5	10101	●	●
CCP2	CCP2PPS	RC3	10011	●	●
CWG1IN	CWG1PPS	RA2	00010	●	●
CLCIN0	CLCIN0PPS	RC3	10011	●	●
CLCIN1	CLCIN1PPS	RC4	10100	●	●
CLCIN2	CLCIN2PPS	RC1	10001	●	●
CLCIN3	CLCIN3PPS	RA5	00101	●	●
ADACT	ADACTPPS	RC2	10010	●	●
SCK1/SCL1	SSP1CLKPPS	RC0	10000	●	●
SDI1/SDA1	SSP1DATPPS	RC1	10001	●	●
SS1	SSP1SSPPS	RC3	10011	●	●
RX1/DT1	RX1DTPPS	RC5	10101	●	●
CK1	TX1CKPPS	RC4	10100	●	●
RX2/DT2	RX2DTPPS	RC1	10001	●	●
CK2	TX2CKPPS	RC0	10000	●	●

© 2017-2021 Microchip Technology Inc.

TABLE 15-2: PPS INPUT SIGNAL ROUTING OPTIONS (PIC16(L)F15344)

INPUT SIGNAL NAME	Input Register Name	Default Location at POR	Reset Value (xxxPPS[4:0])	Remappable to Pins of PORTx		
				PIC16(L)F15344		
				PORTA	PORTB	PORTC
INT	INTPPS	RA2	00010	•	•	•
T0CKI	T0CKIPPS	RA2	00010	•	•	•
T1CKI	T1CKIPSS	RA5	00101	•	•	•
T1G	T1GPPS	RA4	00100	•	•	•
T2IN	T2INPPS	RA5	00101	•	•	•
CCP1	CCP1PPS	RC5	10101	•	•	•
CCP2	CCP2PPS	RC3	10011	•	•	•
CWG1IN	CWG1PPS	RA2	00010	•	•	•
CLCIN0	CLCIN0PPS	RA2	00010	•	•	•
CLCIN1	CLCIN1PPS	RC3	10011	•	•	•
CLCIN2	CLCIN2PPS	RB4	01100	•	•	•
CLCIN3	CLCIN3PPS	RB5	01101	•	•	•
ADACT	ADACTPPS	RC2	10010	•	•	•
SCK1/SCL1	SSP1CLKPPS	RB6	01110	•	•	•
SDI1/SDA1	SSP1DATPPS	RB4	01100	•	•	•
SS1	SSP1SSPPS	RC6	10110	•	•	•
RX1/DT1	RX1DTPPS	RB5	01101	•	•	•
CK1	TX1CKPPS	RB7	01111	•	•	•
RX2/DT2	RX2DTPPS	RC1	10001	•	•	•
CK2	TX2CKPPS	RC0	10000	•	•	•

TABLE 15-3: PPS INPUT REGISTER VALUES

Desired Input Pin	Value to Write to Register
RA0	0x00
RA1	0x01
RA2	0x02
RA3	0x03
RA4	0x04
RA5	0x05
RB4(1)	0x0C
RB5(1)	0x0D
RB6(1)	0x0E
RB7(1)	0x0F
RC0	0x10
RC1	0x11
RC2	0x12
RC3	0x13
RC4	0x14
RC5	0x15
RC6(1)	0x16
RC7(1)	0x17

Note 1: Present on PIC16(L)F15344 only.

15.3 Bidirectional Pins

PPS selections for peripherals with bidirectional signals on a single pin must be made so that the PPS input and PPS output select the same pin. Peripherals that have bidirectional signals include:

- EUSART (synchronous operation)
- MSSP (I^2C)

Note: The I^2C SCLx and SDAx functions can be remapped through PPS. However, only the RB1, RB2, RC3 and RC4 pins have the I^2C and SMBus specific input buffers implemented (I^2C mode disables INLVL and sets thresholds that are specific for I^2C). If the SCLx or SDAx functions are mapped to some other pin (other than RB1, RB2, RC3 or RC4), the general purpose TTL or ST input buffers (as configured based on INLVL register setting) will be used instead. In most applications, it is therefore recommended only to map the SCLx and SDAx pin functions to the RB1, RB2, RC3 or RC4 pins.

15.4 PPS Lock

The PPS includes a mode in which all input and output selections can be locked to prevent inadvertent changes. PPS selections are locked by setting the PPSLOCKED bit of the PPSLOCK register. Setting and clearing this bit requires a special sequence as an extra precaution against inadvertent changes. Examples of setting and clearing the PPSLOCKED bit are shown in Example 15-1.

EXAMPLE 15-1: PPS LOCK/UNLOCK SEQUENCE

```
; suspend interrupts
    BCF     INTCON,GIE
;   BANKSEL PPSLOCK     ; set bank
; required sequence, next 5 instructions
    MOVLW   0x55
    MOVWF   PPSLOCK
    MOVLW   0xAA
    MOVWF   PPSLOCK
; Set PPSLOCKED bit to disable writes or
; Clear PPSLOCKED bit to enable writes
    BSF     PPSLOCK,PPSLOCKED
; restore interrupts
    BSF     INTCON,GIE
```

15.5 PPS Permanent Lock

The PPS can be permanently locked by setting the PPS1WAY Configuration bit. When this bit is set, the PPSLOCKED bit can only be cleared and set one time after a device Reset. This allows for clearing the PPSLOCKED bit so that the input and output selections can be made during initialization. When the PPSLOCKED bit is set after all selections have been made, it will remain set and cannot be cleared until after the next device Reset event.

15.6 Operation During Sleep

PPS input and output selections are unaffected by Sleep.

15.7 Effects of a Reset

A device Power-on-Reset (POR) clears all PPS input and output selections to their default values (Permanent Lock Removed). All other Resets leave the selections unchanged. Default input selections are shown in Table 15-1 and Table 15-2.

TABLE 15-4: PPS OUTPUT SIGNAL ROUTING OPTIONS (PIC16(L)F15324)

Output Signal Name	RxyPPS Register Value	Remappable to Pins of PORTx	
		PIC16(L)F15324	
		PORTA	PORTC
CLKR	0x1B	•	•
NCO1OUT	0x1A	•	•
TMR0	0x19	•	•
SDO1/SDA1	0x16	•	•
SCK1/SCL1	0x15	•	•
C2OUT	0x14	•	•
C1OUT	0x13	•	•
DT2	0x12	•	•
TX2/CK2	0x11	•	•
DT1	0x10	•	•
TX1/CK1	0x0F	•	•
PWM6OUT	0x0E	•	•
PWM5OUT	0x0D	•	•
PWM4OUT	0x0C	•	•
PWM3OUT	0x0B	•	•
CCP2	0x0A	•	•
CCP1	0x09	•	•
CWG1D	0x08	•	•
CWG1C	0x07	•	•
CWG1B	0x06	•	•
CWG1A	0x05	•	•
CLC4OUT	0x04	•	•
CLC3OUT	0x03	•	•
CLC2OUT	0x02	•	•
CLC1OUT	0x01	•	•

TABLE 15-5: PPS OUTPUT SIGNAL ROUTING OPTIONS (PIC16(L)F15344)

Output Signal Name	RxyPPS Register Value	Remappable to Pins of PORTx		
		PIC16(L)F15344		
		PORTA	PORTB	PORTC
CLKR	0x1B	•	•	•
NCO1OUT	0x1A	•	•	•
TMR0	0x19	•	•	•
SDO1/SDA1	0x16	•	•	•
SCK1/SCL1	0x15	•	•	•
C2OUT	0x14	•	•	•
C1OUT	0x13	•	•	•
DT2	0x12	•	•	•
TX2/CK2	0x11	•	•	•
DT1	0x10	•	•	•
TX1/CK1	0x0F	•	•	•
PWM6OUT	0x0E	•	•	•
PWM5OUT	0x0D	•	•	•
PWM4OUT	0x0C	•	•	•
PWM3OUT	0x0B	•	•	•
CCP2	0x0A	•	•	•
CCP1	0x09	•	•	•
CWG1D	0x08	•	•	•
CWG1C	0x07	•	•	•
CWG1B	0x06	•	•	•
CWG1A	0x05	•	•	•
CLC4OUT	0x04	•	•	•
CLC3OUT	0x03	•	•	•
CLC2OUT	0x02	•	•	•
CLC1OUT	0x01	•	•	•

© 2017-2021 Microchip Technology Inc.

15.8 Register Definitions: PPS Input Selection

REGISTER 15-1: xxxPPS: PERIPHERAL xxx INPUT SELECTION(1)

U-0	U-0	R/W-q/u	R/W-q/u	R/W/q/u	R/W-q/u	R/W-q/u	R/W-q/u
—	—	xxxPPS[5:0]					
bit 7							bit 0

Legend:		
R = Readable bit	W = Writable bit	U = Unimplemented bit, read as ‘0’
u = Bit is unchanged	x = Bit is unknown	-n/n = Value at POR and BOR/Value at all other Resets
‘1’ = Bit is set	‘0’ = Bit is cleared	q = value depends on peripheral

bit 7-6 **Unimplemented:** Read as ‘0’

bit 5-0 **xxxPPS[5:0]:** Peripheral xxx Input Selection bits
See Table 15-1 and Table 15-2.

Note 1: The “xxx” in the register name “xxxPPS” represents the input signal function name, such as “INT”, “T0CKI”, “RX”, etc. This register summary shown here is only a prototype of the array of actual registers, as each input function has its own dedicated SFR (ex: INTPPS, T0CKIPPS, RXPPS, etc.).

2: Each specific input signal may only be mapped to a subset of these I/O pins, as shown in Table 15-1 and Table 15-2. Attempting to map an input signal to a non-supported I/O pin will result in undefined behavior. For example, the “INT” signal map be mapped to any PORTA or PORTB pin. Therefore, the INTPPS register may be written with values from 0x00-0x0F (corresponding to RA0-RB7). Attempting to write 0x10 or higher to the INTPPS register is not supported and will result in undefined behavior.

REGISTER 15-2: RxyPPS: PIN Rxy OUTPUT SOURCE SELECTION REGISTER

U-0	U-0	U-0	R/W-0/u	R/W-0/u	R/W-0/u	R/W-0/u	R/W-0/u
—	—	—	RxyPPS[4:0]				
bit 7							bit 0

Legend:		
R = Readable bit	W = Writable bit	U = Unimplemented bit, read as ‘0’
u = Bit is unchanged	x = Bit is unknown	-n/n = Value at POR and BOR/Value at all other Resets
‘1’ = Bit is set	‘0’ = Bit is cleared	

bit 7-5 **Unimplemented:** Read as ‘0’

bit 4-0 **RxyPPS[4:0]:** Pin Rxy Output Source Selection bits
See Table 15-4 and Table 15-5.

Note 1: TRIS control is overridden by the peripheral as required.

REGISTER 15-3: PPSLOCK: PPS LOCK REGISTER

U-0	U-0	U-0	U-0	U-0	U-0	U-0	R/W-0/0
—	—	—	—	—	—	—	PPSLOCKED
bit 7							bit 0

Legend:		
R = Readable bit	W = Writable bit	U = Unimplemented bit, read as ‘0’
u = Bit is unchanged	x = Bit is unknown	-n/n = Value at POR and BOR/Value at all other Resets
‘1’ = Bit is set	‘0’ = Bit is cleared	

bit 7-1 **Unimplemented:** Read as ‘0’

bit 0 **PPSLOCKED:** PPS Locked bit
1= PPS is locked. PPS selections can not be changed.
0= PPS is not locked. PPS selections can be changed.

TABLE 15-6: SUMMARY OF REGISTERS ASSOCIATED WITH THE PPS MODULE

Name	Bit 7	Bit 6	Bit 5	Bit 4	Bit 3	Bit 2	Bit 1	Bit 0	Register on page
PPSLOCK	—	—	—	—	—	—	—	PPSLOCKED	201
INTPPS	—	—	INTPPS[5:0]						200
T0CKIPPS	—	—	T0CKIPPS[5:0]						200
T1CKIPPS	—	—	T1CKIPPS[5:0]						200
T1GPPS	—	—	T1GPPS[5:0]						200
T2INPPS			T2INPPS[5:0]						200
CCP1PPS	—	—	CCP1PPS[5:0]						200
CCP2PPS	—	—	CCP2PPS[5:0]						200
CWG1PPS	—	—	CWG1PPS[5:0]						200
SSP1CLKPPS	—	—	SSP1CLKPPS[5:0]						200
SSP1DATPPS	—	—	SSP1DATPPS[5:0]						200
SSP1SSPPS	—	—	SSP1SSPPS[5:0]						200
RX1DTPPS	—	—	RX1DTPPS[5:0]						201
TX1CKPPS	—	—	TX1CKPPS[5:0]						200
CLCIN0PPS	—	—	CLCIN0PPS[5:0]						200
CLCIN1PPS	—	—	CLCIN1PPS[5:0]						200
CLCIN2PPS	—	—	CLCIN2PPS[5:0]						200
CLCIN3PPS	—	—	CLCIN3PPS[5:0]						200
RX2DTPPS	—	—	RX2DTPPS[5:0]						200
TX2CKPPS	—	—	TX2CKPPS[5:0]						200
ADACTPPS	—	—	ADACTPPS[5:0]						200
RA0PPS	—	—	—	RA0PPS[4:0]					201
RA1PPS	—	—	—	RA1PPS[4:0]					201
RA2PPS	—	—	—	RA2PPS[4:0]					201
RA3PPS	—	—	—	RA3PPS[4:0]					201
RA4PPS	—	—	—	RA4PPS[4:0]					201
RA5PPS	—	—	—	RA5PPS[4:0]					201
RB4PPS(1)	—	—	—	RB4PPS[4:0]					201
RB5PPS(1)	—	—	—	RB5PPS[4:0]					201
RB6PPS(1)	—	—	—	RB6PPS[4:0]					201
RB7PPS(1)	—	—	—	RB7PPS[4:0]					201
RC0PPS	—	—	—	RC0PPS[4:0]					201

Legend: — = unimplemented, read as '0'. Shaded cells are unused by the PPS module.

Note 1: Present on PIC16(L)F15344 only.

TABLE 15-6: SUMMARY OF REGISTERS ASSOCIATED WITH THE PPS MODULE (CONTINUED)

Name	Bit 7	Bit 6	Bit 5	Bit 4	Bit 3	Bit 2	Bit 1	Bit 0	Register on page
RC1PPS	—	—	—	RC1PPS[4:0]					201
RC2PPS	—	—	—	RC2PPS[4:0]					201
RC3PPS	—	—	—	RC3PPS[4:0]					201
RC4PPS	—	—	—	RC4PPS[4:0]					201
RC5PPS	—	—	—	RC5PPS[4:0]					201
RC6PPS(1)	—	—	—	RC6PPS[4:0]					201
RC7PPS(1)	—	—	—	RC7PPS[4:0]					201

Legend: — = unimplemented, read as '0'. Shaded cells are unused by the PPS module.

Note 1: Present on PIC16(L)F15344 only.

16.0 PERIPHERAL MODULE DISABLE

The PIC16(L)F15324/44 provides the ability to disable selected modules, placing them into the lowest possible Power mode.

For legacy reasons, all modules are ON by default following any Reset.

16.1 Disabling a Module

Disabling a module has the following effects:

- All clock and control inputs to the module are suspended; there are no logic transitions, and the module will not function.
- The module is held in Reset:
  - Writing to SFRs is disabled
  - Reads return 00h

16.2 Enabling a module

When the register bit is cleared, the module is re-enabled and will be in its Reset state; SFR data will reflect the POR Reset values.

Depending on the module, it may take up to one full instruction cycle for the module to become active. There must be no interaction with the module (e.g., writing to registers) for at least one instruction after it has been re-enabled.

16.3 Disabling a Module

When a module is disabled, all the associated PPS selection registers (Register 15-1, 15-2 and 15-3), are also disabled.

16.4 System Clock Disable

Setting SYSCMD (PMD0, Register 16-1) disables the system clock (FOSC) distribution network to the peripherals. Not all peripherals make use of SYSCLK, so not all peripherals are affected. Refer to the specific peripheral description to see if it will be affected by this bit.

REGISTER 16-1: PMD0: PMD CONTROL REGISTER 0

R/W-0/0	R/W-0/0	U-0	U-0	U-0	R/W-0/0	R/W-0/0	R/W-0/0
SYSCMD	FVRMD	—	—	—	NVMMD	CLKRMD	IOCMD
7							0

Legend:		
R = Readable bit	W = Writable bit	U = Unimplemented bit, read as '0'
u = Bit is unchanged	x = Bit is unknown	-n/n = Value at POR and BOR/Value at all other Resets
'1' = Bit is set	'0' = Bit is cleared	q = Value depends on condition

bit 7 **SYSCMD:** Disable Peripheral System Clock Network bit
See description in **Section 16.4 "System Clock Disable"**.
1 = System clock network disabled (a.k.a. FOSC)
0 = System clock network enabled

bit 6 **FVRMD:** Disable Fixed Voltage Reference (FVR) bit
1 = FVR module disabled
0 = FVR module enabled

bit 5-3 **Unimplemented:** Read as '0'

bit 2 **NVMMD:** NVM Module Disable bit(1)
1 = User memory reading and writing is disabled; NVMCON registers cannot be written; FSR access to these locations returns zero.
0 = NVM module enabled

bit 1 **CLKRMD:** Disable Clock Reference CLKR bit
1 = CLKR module disabled
0 = CLKR module enabled

bit 0 **IOCMD:** Disable Interrupt-on-Change bit, All Ports
1 = IOC module(s) disabled
0 = IOC module(s) enabled

Note 1: When enabling NVM, a delay of up to 1 µs may be required before accessing data.

REGISTER 16-2: PMD1: PMD CONTROL REGISTER 1

R/W-0/0	U-0	U-0	U-0	U-0	R/W-0/0	R/W-0/0	R/W-0/0
NCO1MD	—	—	—	—	TMR2MD	TMR1MD	TMR0MD
bit 7							bit 0

Legend:		
R = Readable bit	W = Writable bit	U = Unimplemented bit, read as ‘0’
u = Bit is unchanged	x = Bit is unknown	-n/n = Value at POR and BOR/Value at all other Resets
‘1’ = Bit is set	‘0’ = Bit is cleared	q = Value depends on condition

bit 7 **NCO1MD:** Disable Numerically Control Oscillator bit
1 = NCO1 module disabled
0 = NCO1 module enabled

bit 6-3 **Unimplemented:** Read as ‘0’

bit 2 **TMR2MD:** Disable Timer TMR2 bit
1 = Timer2 module disabled
0 = Timer2 module enabled

bit 1 **TMR1MD:** Disable Timer TMR1 bit
1 = Timer1 module disabled
0 = Timer1 module enabled

bit 0 **TMR0MD:** Disable Timer TMR0 bit
1 = Timer0 module disabled
0 = Timer0 module enabled

REGISTER 16-3: PMD2: PMD CONTROL REGISTER 2

U-0	R/W-0/0	R/W-0/0	U-0	U-0	R/W-0/0	R/W-0/0	R/W-0/0
—	DAC1MD	ADCMD	—	—	CMP2MD	CMP1MD	ZCDMD
bit 7							bit 0

Legend:		
R = Readable bit	W = Writable bit	U = Unimplemented bit, read as ‘0’
u = Bit is unchanged	x = Bit is unknown	-n/n = Value at POR and BOR/Value at all other Resets
‘1’ = Bit is set	‘0’ = Bit is cleared	q = Value depends on condition

bit 7 **Unimplemented:** Read as ‘0’

bit 6 **DAC1MD:** Disable DAC1 bit
1 = DAC module disabled
0 = DAC module enabled

bit 5 **ADCMD:** Disable ADC bit
1 = ADC module disabled
0 = ADC module enabled

bit 4-3 **Unimplemented:** Read as ‘0’

bit 2 **CMP2MD:** Disable Comparator C2 bit
1 = C2 module disabled
0 = C2 module enabled

bit 1 **CMP1MD:** Disable Comparator C1 bit
1 = C1 module disabled
0 = C1 module enabled

bit 0 **ZCDMD:** Disable ZCD bit
1 = ZCD module disabled
0 = ZCD module enabled

REGISTER 16-4: PMD3: PMD CONTROL REGISTER 3

U-0	U-0	R/W-0/0	R/W-0/0	R/W-0/0	R/W-0/0	R/W-0/0	R/W-0/0
—	—	PWM6MD	PWM5MD	PWM4MD	PWM3MD	CCP2MD	CCP1MD
bit 7							bit 0

Legend:		
R = Readable bit	W = Writable bit	U = Unimplemented bit, read as ‘0’
u = Bit is unchanged	x = Bit is unknown	-n/n = Value at POR and BOR/Value at all other Resets
‘1’ = Bit is set	‘0’ = Bit is cleared	q = Value depends on condition

bit 7-6 **Unimplemented:** Read as ‘0’

bit 5 **PWM6MD:** Disable Pulse-Width Modulator PWM6 bit
1 = PWM6 module disabled
0 = PWM6 module enabled

bit 4 **PWM5MD:** Disable Pulse-Width Modulator PWM5 bit
1 = PWM5 module disabled
0 = PWM5 module enabled

bit 3 **PWM4MD:** Disable Pulse-Width Modulator PWM4 bit
1 = PWM4 module disabled
0 = PWM4 module enabled

bit 2 **PWM3MD:** Disable Pulse-Width Modulator PWM3 bit
1 = PWM3 module disabled
0 = PWM3 module enabled

bit 1 **CCP2MD:** Disable CCP2 bit
1 = CCP2 module disabled
0 = CCP2 module enabled

bit 0 **CCP1MD:** Disable CCP1 bit
1 = CCP1 module disabled
0 = CCP1 module enabled

REGISTER 16-5: PMD4: PMD CONTROL REGISTER 4

R/W-0/0	R/W-0/0	U-0	R/W-0/0	U-0	U-0	U-0	R/W-0/0
UART2MD	UART1MD	—	MSSP1MD	—	—	—	CWG1MD
bit 7							bit 0

Legend:		
R = Readable bit	W = Writable bit	U = Unimplemented bit, read as ‘0’
u = Bit is unchanged	x = Bit is unknown	-n/n = Value at POR and BOR/Value at all other Resets
‘1’ = Bit is set	‘0’ = Bit is cleared	q = Value depends on condition

bit 7 **UART2MD:** Disable EUSART2 bit
1 = EUSART2 module disabled
0 = EUSART2 module enabled

bit 6 **UART1MD:** Disable EUSART1 bit
1 = EUSART1 module disabled
0 = EUSART1 module enabled

bit 5 **Unimplemented:** Read as ‘0’

bit 4 **MSSP1MD:** Disable MSSP1 bit
1 = MSSP1 module disabled
0 = MSSP1 module enabled

bit 3-1 **Unimplemented:** Read as ‘0’

bit 0 **CWG1MD:** Disable CWG1 bit
1 = CWG1 module disabled
0 = CWG1 module enabled

REGISTER 16-6: PMD5 – PMD CONTROL REGISTER 5

U-0	U-0	U-0	R/W-0/0	R/W-0/0	R/W-0/0	R/W-0/0	U-0
—	—	—	CLC4MD	CLC3MD	CLC2MD	CLC1MD	—
bit 7							bit 0

Legend:		
R = Readable bit	W = Writable bit	U = Unimplemented bit, read as ‘0’
u = Bit is unchanged	x = Bit is unknown	-n/n = Value at POR and BOR/Value at all other Resets
‘1’ = Bit is set	‘0’ = Bit is cleared	q = Value depends on condition

bit 7-5 **Unimplemented:** Read as ‘0’

bit 4 **CLC4MD:** Disable CLC4 bit
1 = CLC4 module disabled
0 = CLC4 module enabled

bit 3 **CLC3MD:** Disable CLC3 bit
1 = CLC3 module disabled
0 = CLC3 module enabled

bit 2 **CLC2MD:** Disable CLC2 bit
1 = CLC2 module disabled
0 = CLC2 module enabled

bit 1 **CLC1MD:** Disable CLC bit
1 = CLC1 module disabled
0 = CLC1 module enabled

bit 0 **Unimplemented**: Read as ‘0’

TABLE 16-1: SUMMARY OF REGISTERS ASSOCIATED WITH THE PPS MODULE

Name	Bit 7	Bit 6	Bit 5	Bit 4	Bit 3	Bit 2	Bit 1	Bit 0	Register on page
PMD0	SYSCMD	FVRMD	—	—	—	NVMMD	CLKRMD	IOCMD	205
PMD1	NCO1MD	—	—	—	—	TMR2MD	TMR1MD	TMR0MD	206
PMD2	—	DAC1MD	ADCMD	—	—	CMP2MD	CMP1MD	ZCDMD	207
PMD3	—	—	PWM6MD	PWM5MD	PWM4MD	PWM3MD	CCP2MD	CCP1MD	208
PMD4	UART2MD	UART1MD	—	MSSP1MD	—	—	—	CWG1MD	209
PMD5	—	—	—	CLC4MD	CLC3MD	CLC2MD	CLC1MD	—	210

Legend: — = unimplemented, read as '0'. Shaded cells are unused by the PPS module.

17.0 INTERRUPT-ON-CHANGE

An interrupt can be generated by detecting a signal that has either a rising edge or a falling edge. Any individual pin, or combination of pins, can be configured to generate an interrupt. The interrupt-on-change module has the following features:

- Interrupt-on-Change enable (Host Switch)
- Individual pin configuration
- Rising and falling edge detection
- Individual pin interrupt flags

Figure 17-1 is a block diagram of the IOC module.

17.1 Enabling the Module

To allow individual pins to generate an interrupt, the IOCIE bit of the PIE0 register must be set. If the IOCIE bit is disabled, the edge detection on the pin will still occur, but an interrupt will not be generated.

17.2 Individual Pin Configuration

For each pin, a rising edge detector and a falling edge detector are present. To enable a pin to detect a rising edge, the associated bit of the IOCxP register is set. To enable a pin to detect a falling edge, the associated bit of the IOCxN register is set.

A pin can be configured to detect rising and falling edges simultaneously by setting the associated bits in both of the IOCxP and IOCxN registers.

17.3 Interrupt Flags

The bits located in the IOCxF registers are status flags that correspond to the interrupt-on-change pins of each port. If an expected edge is detected on an appropriately enabled pin, then the status flag for that pin will be set, and an interrupt will be generated if the IOCIE bit is set. The IOCIF bit of the PIR0 register reflects the status of all IOCxF bits.

17.3.1 CLEARING INTERRUPT FLAGS

The individual status flags (IOCxF register bits) can be cleared by resetting them to zero. If another edge is detected during this clearing operation, the associated status flag will be set at the end of the sequence, regardless of the value actually being written.

To ensure that no detected edge is lost while clearing flags, only AND operations masking out known changed bits may be performed. The following sequence is an example of what may be performed.

EXAMPLE 17-1: CLEARING INTERRUPT FLAGS (PORTA EXAMPLE)

```
MOVLW   0xff
XORWF   IOCAF, W
ANDWF   IOCAF, F
```

17.4 Operation in Sleep

The interrupt-on-change interrupt event will wake the device from Sleep mode, if the IOCIE bit is set.

FIGURE 17-1: INTERRUPT-ON-CHANGE BLOCK DIAGRAM (PORTB EXAMPLE)

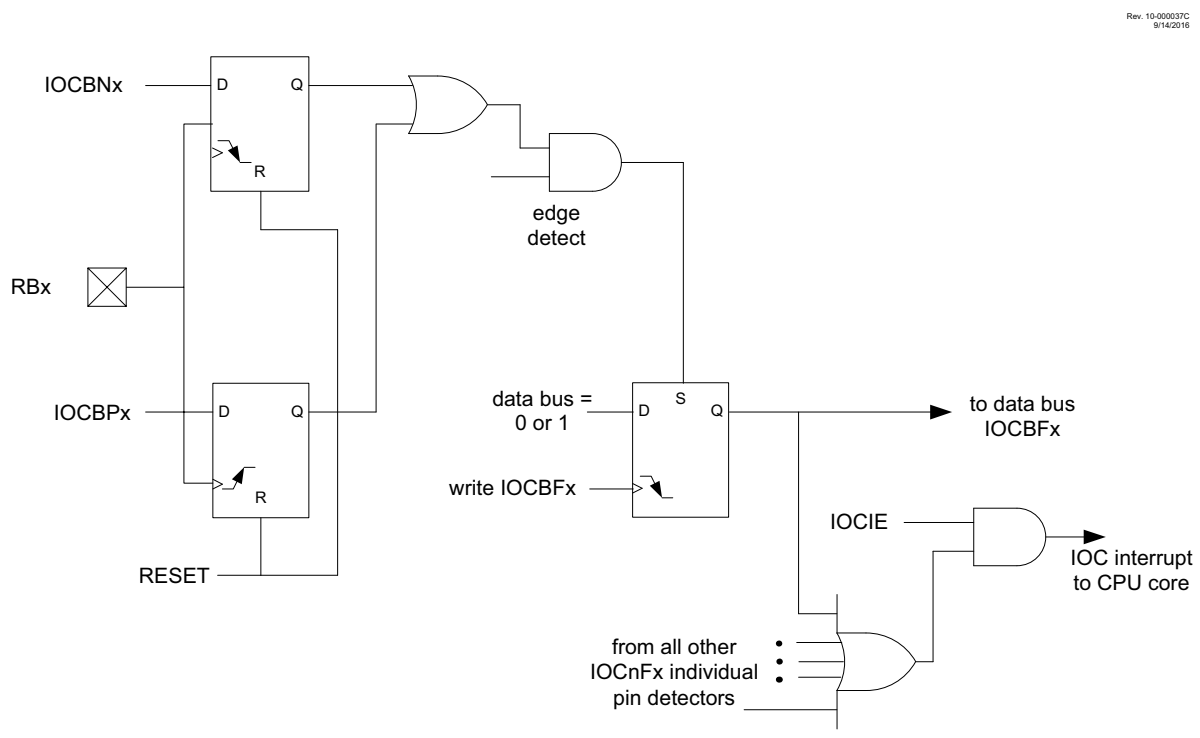

Note 1: See Table 8-1 for BOR Active Conditions.

17.5 Register Definitions: Interrupt-on-Change Control

REGISTER 17-1: IOCAP: INTERRUPT-ON-CHANGE PORTA POSITIVE EDGE REGISTER

U-0	U-0	R/W-0/0	R/W-0/0	R/W-0/0	R/W-0/0	R/W-0/0	R/W-0/0
—	—	IOCAP5	IOCAP4	IOCAP3	IOCAP2	IOCAP1(1)	IOCAP0(1)
bit 7							bit 0

Legend:		
R = Readable bit	W = Writable bit	U = Unimplemented bit, read as ‘0’
u = Bit is unchanged	x = Bit is unknown	-n/n = Value at POR and BOR/Value at all other Resets
‘1’ = Bit is set	‘0’ = Bit is cleared	

bit 7-6 **Unimplemented:** read as ‘0’

bit 5-0 **IOCAP[5:0]:** Interrupt-on-Change PORTA Positive Edge Enable bits
1 = Interrupt-on-Change enabled on the pin for a positive-going edge. IOCAFx bit and IOCIF flag will be set upon detecting an edge.
0 = Interrupt-on-Change disabled for the associated pin.

REGISTER 17-2: IOCAN: INTERRUPT-ON-CHANGE PORTA NEGATIVE EDGE REGISTER

U-0	U-0	R/W-0/0	R/W-0/0	R/W-0/0	R/W-0/0	R/W-0/0	R/W-0/0
—	—	IOCAN5	IOCAN4	IOCAN3	IOCAN2	IOCAN1(1)	IOCAN0(1)
bit 7							bit 0

Legend:		
R = Readable bit	W = Writable bit	U = Unimplemented bit, read as ‘0’
u = Bit is unchanged	x = Bit is unknown	-n/n = Value at POR and BOR/Value at all other Resets
‘1’ = Bit is set	‘0’ = Bit is cleared	

bit 7-6 **Unimplemented:** read as ‘0’

bit 5-0 **IOCAN[5:0]:** Interrupt-on-Change PORTA Negative Edge Enable bits
1 = Interrupt-on-Change enabled on the pin for a negative-going edge. IOCAFx bit and IOCIF flag will be set upon detecting an edge.
0 = Interrupt-on-Change disabled for the associated pin.

REGISTER 17-3: IOCAF: INTERRUPT-ON-CHANGE PORTA FLAG REGISTER

U-0	U-0	R/W/HS-0/0	R/W/HS-0/0	R/W/HS-0/0	R/W/HS-0/0	R/W/HS-0/0	R/W/HS-0/0
—	—	IOCAF5	IOCAF4	IOCAF3	IOCAF2	IOCAF1(1)	IOCAF0(1)
bit 7							bit 0

Legend:		
R = Readable bit	W = Writable bit	U = Unimplemented bit, read as ‘0’
u = Bit is unchanged	x = Bit is unknown	-n/n = Value at POR and BOR/Value at all other Resets
‘1’ = Bit is set	‘0’ = Bit is cleared	HS - Bit is set in hardware

bit 7-6 **Unimplemented:** read as ‘0’

bit 5-0 **IOCAF[5:0]:** Interrupt-on-Change PORTA Flag bits
1 = An enabled change was detected on the associated pin.
Set when IOCAPx = 1 and a rising edge was detected on RAx, or when IOCANx = 1 and a falling edge was detected on RAx.
0 = No change was detected, or the user cleared the detected change.

Note 1: If the debugger is enabled, these bits are not available for use.

REGISTER 17-4: IOCBP: INTERRUPT-ON-CHANGE PORTB POSITIVE EDGE REGISTER

R/W-0/0	R/W-0/0	R/W-0/0	R/W-0/0	U-0	U-0	U-0	U-0
IOCBP7	IOCBP6	IOCBP5	IOCBP4	—	—	—	—
bit 7							bit 0

Legend:		
R = Readable bit	W = Writable bit	U = Unimplemented bit, read as ‘0’
u = Bit is unchanged	x = Bit is unknown	-n/n = Value at POR and BOR/Value at all other Resets
‘1’ = Bit is set	‘0’ = Bit is cleared	

bit 7-4 **IOCBP[7:4]:** Interrupt-on-Change PORTB Positive Edge Enable bits
`1` = Interrupt-on-Change enabled on the pin for a positive-going edge. IOCBFx bit and IOCIF flag will be set upon detecting an edge.
`0` = Interrupt-on-Change disabled for the associated pin.

bit 3-0 **Unimplemented:** read as ‘`0`’

REGISTER 17-5: IOCBN: INTERRUPT-ON-CHANGE PORTB NEGATIVE EDGE REGISTER

R/W-0/0	R/W-0/0	R/W-0/0	R/W-0/0	U-0	U-0	U-0	U-0
IOCBN7	IOCBN6	IOCBN5	IOCBN4	—	—	—	—
bit 7							bit 0

Legend:		
R = Readable bit	W = Writable bit	U = Unimplemented bit, read as ‘0’
u = Bit is unchanged	x = Bit is unknown	-n/n = Value at POR and BOR/Value at all other Resets
‘1’ = Bit is set	‘0’ = Bit is cleared	

bit 7-4 **IOCBN[7:4]:** Interrupt-on-Change PORTB Negative Edge Enable bits
`1` = Interrupt-on-Change enabled on the pin for a negative-going edge. IOCBFx bit and IOCIF flag will be set upon detecting an edge.
`0` = Interrupt-on-Change disabled for the associated pin.

bit 3-0 **Unimplemented:** read as ‘`0`’

© 2017-2021 Microchip Technology Inc.

REGISTER 17-6: IOCBF: INTERRUPT-ON-CHANGE PORTB FLAG REGISTER

R/W/HS-0/0	R/W/HS-0/0	R/W/HS-0/0	R/W/HS-0/0	U-0	U-0	U-0	U-0
IOCBF7	IOCBF6	IOCBF5	IOCBF4	—	—	—	—
bit 7							bit 0

Legend:		
R = Readable bit	W = Writable bit	U = Unimplemented bit, read as ‘0’
u = Bit is unchanged	x = Bit is unknown	-n/n = Value at POR and BOR/Value at all other Resets
‘1’ = Bit is set	‘0’ = Bit is cleared	HS - Bit is set in hardware

bit 7-4 **IOCBF[7:4]:** Interrupt-on-Change PORTB Flag bits
`1` = An enabled change was detected on the associated pin.
Set when IOCBPx = `1` and a rising edge was detected on RBx, or when IOCBNx = `1` and a falling edge was detected on RBx.
`0` = No change was detected, or the user cleared the detected change.

bit 3-0 **Unimplemented:** read as ‘`0`’

REGISTER 17-7: IOCCP: INTERRUPT-ON-CHANGE PORTC POSITIVE EDGE REGISTER

R/W-0/0	R/W-0/0	R/W-0/0	R/W-0/0	R/W-0/0	R/W-0/0	R/W-0/0	R/W-0/0
IOCCP7(1)	IOCCP6(1)	IOCCP5	IOCCP4	IOCCP3	IOCCP2	IOCCP1	IOCCP0
bit 7							bit 0

Legend:		
R = Readable bit	W = Writable bit	U = Unimplemented bit, read as ‘0’
u = Bit is unchanged	x = Bit is unknown	-n/n = Value at POR and BOR/Value at all other Resets
‘1’ = Bit is set	‘0’ = Bit is cleared	

bit 7-0 **IOCCP[7:0]:** Interrupt-on-Change PORTC Positive Edge Enable bits
1 = Interrupt-on-Change enabled on the pin for a positive-going edge. IOCCFx bit and IOCIF flag will be set upon detecting an edge.
0 = Interrupt-on-Change disabled for the associated pin

Note 1: Present only in PIC16(L)F15344.

REGISTER 17-8: IOCCN: INTERRUPT-ON-CHANGE PORTC NEGATIVE EDGE REGISTER

R/W-0/0	R/W-0/0	R/W-0/0	R/W-0/0	R/W-0/0	R/W-0/0	R/W-0/0	R/W-0/0
IOCCN7(1)	IOCCN6(1)	IOCCN5	IOCCN4	IOCCN3	IOCCN2	IOCCN1	IOCCN0
bit 7							bit 0

Legend:		
R = Readable bit	W = Writable bit	U = Unimplemented bit, read as ‘0’
u = Bit is unchanged	x = Bit is unknown	-n/n = Value at POR and BOR/Value at all other Resets
‘1’ = Bit is set	‘0’ = Bit is cleared	

bit 7-0 **IOCCN[7:0]:** Interrupt-on-Change PORTC Negative Edge Enable bits
1 = Interrupt-on-Change enabled on the pin for a negative-going edge. IOCCFx bit and IOCIF flag will be set upon detecting an edge.
0 = Interrupt-on-Change disabled for the associated pin

Note 1: Present only in PIC16(L)F15344.

REGISTER 17-9: IOCCF: INTERRUPT-ON-CHANGE PORTC FLAG REGISTER

R/W/HS-0/0	R/W/HS-0/0	R/W/HS-0/0	R/W/HS-0/0	R/W/HS-0/0	R/W/HS-0/0	R/W/HS-0/0	R/W/HS-0/0
IOCCF7(1)	IOCCF6(1)	IOCCF5	IOCCF4	IOCCF3	IOCCF2	IOCCF1	IOCCF0
bit 7							bit 0

Legend:		
R = Readable bit	W = Writable bit	U = Unimplemented bit, read as ‘0’
u = Bit is unchanged	x = Bit is unknown	-n/n = Value at POR and BOR/Value at all other Resets
‘1’ = Bit is set	‘0’ = Bit is cleared	HS - Bit is set in hardware

bit 7-0 **IOCCF[7:0]:** Interrupt-on-Change PORTC Flag bits
`1` = An enabled change was detected on the associated pin
Set when IOCCPx = `1` and a rising edge was detected on RCx, or when IOCCNx = `1` and a falling edge was detected on RCx.
`0` = No change was detected, or the user cleared the detected change

Note 1: Present only on the PIC16(L)F15344 20-pin devices.

TABLE 17-1: SUMMARY OF REGISTERS ASSOCIATED WITH INTERRUPT-ON-CHANGE

Name	Bit 7	Bit 6	Bit 5	Bit 4	Bit 3	Bit 2	Bit 1	Bit 0	Register on Page
INTCON	GIE	PEIE	—	—	—	—	—	INTEDG	125
PIE0	—	—	TMR0IE	IOCIE	—	—	—	INTE	126
IOCAP	IOCAP7(1)	IOCAP6(1)	IOCAP5	IOCAP4	IOCAP3	IOCAP2	IOCAP1	IOCAP0	214
IOCAN	IOCAN7(1)	IOCAN6(1)	IOCAN5	IOCAN4	IOCAN3	IOCAN2	IOCAN1	IOCAN0	214
IOCAF	IOCAF7(1)	IOCAF6(1)	IOCAF5	IOCAF4	IOCAF3	IOCAF2	IOCAF1	IOCAF0	215
IOCBP(1)	IOCBP7	IOCBP6	IOCBP5	IOCBP4	—	—	—	—	216
IOCBN(1)	IOCBN7	IOCBN6	IOCBN5	IOCBN4	—	—	—	—	216
IOCBF(1)	IOCBF7	IOCBF6	IOCBF5	IOCBF4	—	—	—	—	217
IOCCP	IOCCP7(1)	IOCCP6(1)	IOCCP5	IOCCP4	IOCCP3	IOCCP2	IOCCP1	IOCCP0	218
IOCCN	IOCCN7(1)	IOCCN6(1)	IOCCN5	IOCCN4	IOCCN3	IOCCN2	IOCCN1	IOCCN0	218
IOCCF	IOCCF7(1)	IOCCF6(1)	IOCCF5	IOCCF4	IOCCF3	IOCCF2	IOCCF1	IOCCF0	219

Legend: — = unimplemented location, read as '0'. Shaded cells are not used by interrupt-on-change.
Note 1: Present only in PIC16(L)F15344.

18.0 FIXED VOLTAGE REFERENCE (FVR)

The Fixed Voltage Reference, or FVR, is a stable voltage reference, independent of VDD, with 1.024V, 2.048V or 4.096V selectable output levels. The output of the FVR can be configured to supply a reference voltage to the following:

- ADC input channel
- ADC positive reference
- Comparator positive and negative input
- Digital-to-Analog Converter (DAC)

The FVR can be enabled by setting the FVREN bit of the FVRCON register.

Note:	Fixed Voltage Reference output cannot exceed VDD.

18.1 Independent Gain Amplifiers

The output of the FVR, which is connected to the ADC, comparators, and DAC, is routed through two independent programmable gain amplifiers. Each amplifier can be programmed for a gain of 1x, 2x or 4x, to produce the three possible voltage levels.

The ADFVR[1:0] bits of the FVRCON register are used to enable and configure the gain amplifier settings for the reference supplied to the ADC module. Reference **Section 20.0 "Analog-to-Digital Converter (ADC) Module"** for additional information.

The CDAFVR[1:0] bits of the FVRCON register are used to enable and configure the gain amplifier settings for the reference supplied to the DAC and comparator module. Reference **Section 21.0 "5-Bit Digital-to-Analog Converter (DAC1) Module"** and **Section 23.0 "Comparator Module"** for additional information.

18.2 FVR Stabilization Period

When the Fixed Voltage Reference module is enabled, it requires time for the reference and amplifier circuits to stabilize.

FVRRDY is an indicator of the reference being ready. In the case of an LF device, or a device on which the BOR is enabled in the Configuration Word settings, then the FVRRDY bit will be high prior to setting FVREN as those module require the reference voltage.

FIGURE 18-1: VOLTAGE REFERENCE BLOCK DIAGRAM

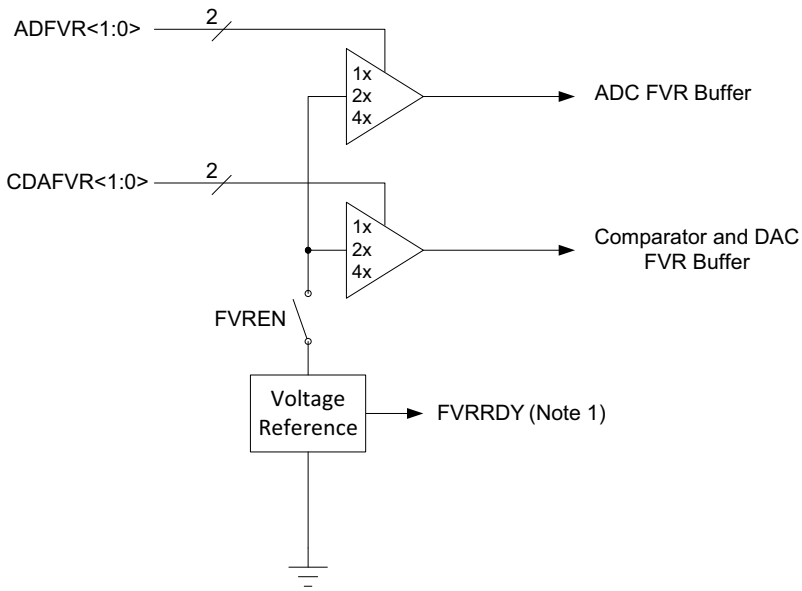

Note 1: FVRRDY is always '1'.
2: Any peripheral requiring the Fixed Reference (See Table 18-1).

18.3 Register Definitions: FVR Control

REGISTER 18-1: FVRCON: FIXED VOLTAGE REFERENCE CONTROL REGISTER

R/W-0/0	R-q/q	R/W-0/0	R/W-0/0	R/W-0/0	R/W-0/0	R/W-0/0	R/W-0/0
FVREN	FVRRDY(1)	TSEN(3)	TSRNG(3)	CDAFVR[1:0]		ADFVR[1:0]	
bit 7							bit 0

Legend:		
R = Readable bit	W = Writable bit	U = Unimplemented bit, read as ‘0’
u = Bit is unchanged	x = Bit is unknown	-n/n = Value at POR and BOR/Value at all other Resets
‘1’ = Bit is set	‘0’ = Bit is cleared	q = Value depends on condition

bit 7 **FVREN:** Fixed Voltage Reference Enable bit
1 = Fixed Voltage Reference is enabled
0 = Fixed Voltage Reference is disabled

bit 6 **FVRRDY:** Fixed Voltage Reference Ready Flag bit(1)
1 = Fixed Voltage Reference output is ready for use
0 = Fixed Voltage Reference output is not ready or not enabled

bit 5 **TSEN:** Temperature Indicator Enable bit(3)
1 = Temperature Indicator is enabled
0 = Temperature Indicator is disabled

bit 4 **TSRNG:** Temperature Indicator Range Selection bit(3)
1 = Temperature in High Range V_{OUT} = 3VT
0 = Temperature in Low Range V_{OUT} = 2VT

bit 3-2 **CDAFVR[1:0]:** Comparator FVR Buffer Gain Selection bits
11 = Comparator FVR Buffer Gain is 4x, (4.096V)(2)
10 = Comparator FVR Buffer Gain is 2x, (2.048V)(2)
01 = Comparator FVR Buffer Gain is 1x, (1.024V)
00 = Comparator FVR Buffer is off

bit 1-0 **ADFVR[1:0]:** ADC FVR Buffer Gain Selection bit
11 = ADC FVR Buffer Gain is 4x, (4.096V)(2)
10 = ADC FVR Buffer Gain is 2x, (2.048V)(2)
01 = ADC FVR Buffer Gain is 1x, (1.024V)
00 = ADC FVR Buffer is off

Note 1: FVRRDY is always ‘1’.
2: Fixed Voltage Reference output cannot exceed V_{DD}.
3: See **Section 19.0 “Temperature Indicator Module”** for additional information.

TABLE 18-1: SUMMARY OF REGISTERS ASSOCIATED WITH FIXED VOLTAGE REFERENCE

Name	Bit 7	Bit 6	Bit 5	Bit 4	Bit 3	Bit 2	Bit 1	Bit 0	Register on page
FVRCON	FVREN	FVRRDY	TSEN	TSRNG	CDAFVR[1:0]		ADFVR[1:0]		222
ADCON0	CHS[5:0]						GO/$\overline{\text{DONE}}$	ADON	234
ADCON1	ADFM	ADCS[2:0]			—	—	ADPREF[1:0]		235
DAC1CON0	DAC1EN	—	DAC1OE1	DAC1OE2	DAC1PSS[1:0]		—	DAC1NSS	243

Legend: – = unimplemented locations read as '0'. Shaded cells are not used with the Fixed Voltage Reference.

19.0 TEMPERATURE INDICATOR MODULE

This family of devices is equipped with a temperature circuit designed to measure the operating temperature of the silicon die.

The circuit's range of operating temperature falls between -40°C and +125°C. A one-point calibration allows the circuit to indicate a temperature closely surrounding that point. A two-point calibration allows the circuit to sense the entire range of temperature more accurately.

19.1 Module Operation

The temperature indicator module consists of a temperature-sensing circuit that provides a voltage to the device ADC. The analog voltage output, VMEAS, varies inversely to the device temperature. The output of the temperature indicator is referred to as VMEAS.

Figure 19-1 shows a simplified block diagram of the temperature indicator module.

FIGURE 19-1: TEMPERATURE INDICATOR MODULE BLOCK DIAGRAM

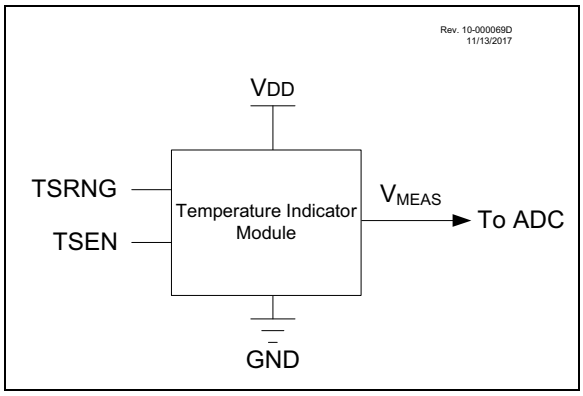

The output of the circuit is measured using the internal Analog-to-Digital Converter. A channel is reserved for the temperature circuit output. Refer to **Section 20.0 "Analog-to-Digital Converter (ADC) Module"** for detailed information.

The ON/OFF bit for the module is located in the FVRCON register. See **Section 18.0 "Fixed Voltage Reference (FVR)"** for more information. The circuit is enabled by setting the TSEN bit of the FVRCON register. When the module is disabled, the circuit draws no current.

The circuit operates in either High or Low range. Refer to **Section 19.1.1 "Temperature Indicator Range"** for more details on the range settings.

19.1.1 TEMPERATURE INDICATOR RANGE

The temperature indicator circuit operates in either high or low range. The high range, selected by setting the TSRNG bit of the FVRCON register, provides a wider output voltage. This provides more resolution over the temperature range. High range requires a higher-bias voltage to operate and thus, a higher VDD is needed. The low range is selected by clearing the TSRNG bit of the FVRCON register. The low range generates a lower sensor voltage and thus, a lower VDD voltage is needed to operate the circuit.

The output voltage of the sensor is the highest value at -40°C and the lowest value at +125°C.

- **High Range:** The High range is used in applications with the reference for the ADC, VREF = 2.048V. This range may not be suitable for battery-powered applications. The ADC reading (in counts) at 90°C for the high range setting is stored in the DIA Table (Table 6-1) as parameter TSHR2.
- **Low Range:** This mode is useful in applications in which the VDD is too low for high-range operation. The VDD in this mode can be as low as 1.8V. VDD must, however, be at least 0.5V higher than the maximum sensor voltage depending on the expected low operating temperature. The ADC reading (in counts) at 90°C for the Low range setting is stored in the DIA Table (Table 6-1) as parameter TSLR2.

19.1.2 MINIMUM OPERATING VDD

When the temperature circuit is operated in low range, the device may be operated at any operating voltage that is within specifications. When the temperature circuit is operated in high range, the device operating voltage, VDD, must be high enough to ensure that the temperature circuit is correctly biased.

Table 19-1 shows the recommended minimum VDD vs. Range setting.

TABLE 19-1: RECOMMENDED VDD vs. RANGE

Min.VDD, TSRNG = 1 (High Range)	Min. VDD, TSRNG = 0 (Low Range)
≥ 2.5	≥ 1.8

19.2 Temperature Calculation

This section describes the steps involved in calculating the die temperature, TMEAS:

1. Obtain the ADC count value of the measured analog voltage: The analog output voltage, VMEAS is converted to a digital count value by the Analog-to-Digital Converter (ADC) and is referred to as ADCMEAS.
2. Obtain the ADC count value, ADCDIA at 90 degrees, in the DIA table (Table 6-1). This parameter is TSLR2 for the low range setting or TSHR2 for the high range setting of the temperature indicator module.
3. Obtain the output analog voltage (in mV) value of the Fixed Reference Voltage (FVR) for 2x setting, from the DIA Table. This parameter is FVRA2X in the DIA table (Table 6-1).
4. Obtain the value of the temperature indicator voltage sensitivity, parameter Mv, from Table 37-26 for the corresponding range setting.

Equation 19-1 provides an estimate for the die temperature based on the above parameters.

EQUATION 19-1: SENSOR TEMPERATURE

$$T_{MEAS} = 90 + \frac{(ADC_{MEAS} - ADC_{DIA}) \times FVRA2X}{(2^N - 1) \times Mv}$$

Where:
ADCMEAS = ADC reading at temperature being estimated
ADCDIA = ADC reading stored in the DIA
FVRA2X = FVR value stored in the DIA for 2x setting
N = Resolution of the ADC
Mv = Temperature Indicator voltage sensitivity (mV/°C)

Note 1: It is recommended to take the average of ten measurements of ADCmeas to reduce noise and improve accuracy.

2: Refer to **Section 37.0 "Electrical Specifications"** for FVR reference voltage accuracy.

19.2.1 CALIBRATION

19.2.1.1 Higher-Order Calibration

If the application requires more precise temperature measurement, additional calibrations steps will be necessary. For these applications, two-point or three-point calibration is recommended.

19.3 ADC Acquisition Time

To ensure accurate temperature measurements, the user must wait a certain minimum acquisition time (parameter TS01 in Table 37-26) for the ADC value to settle, after the ADC input multiplexer is connected to the temperature indicator output, before the conversion is performed.

TABLE 19-2: SUMMARY OF REGISTERS ASSOCIATED WITH THE TEMPERATURE INDICATOR(1)

Name	Bit 7	Bit 6	Bit 5	Bit 4	Bit 3	Bit 2	Bit 1	Bit 0	Register on page
FVRCON	EN	RDY	TSEN	TSRNG	CDAFVR[1:0]		ADFVR[1:0]		222

Legend: — = Unimplemented location, read as '0'. Shaded cells are unused by the temperature indicator module.
Note 1: It is recommended to take the average of ten measurements of ADCMEAS to reduce noise and improve accuracy.

20.0 ANALOG-TO-DIGITAL CONVERTER (ADC) MODULE

The Analog-to-Digital Converter (ADC) allows conversion of an analog input signal to a 10-bit binary representation of that signal. This device uses analog inputs, which are multiplexed into a single sample and hold circuit. The output of the sample and hold is connected to the input of the converter. The converter generates a 10-bit binary result via successive approximation and stores the conversion result into the ADC result registers (ADRESH:ADRESL register pair). Figure 20-1 shows the block diagram of the ADC.

The ADC voltage reference is software selectable to be either internally generated or externally supplied.

The ADC can generate an interrupt upon completion of a conversion. This interrupt can be used to wake-up the device from Sleep.

FIGURE 20-1: ADC BLOCK DIAGRAM

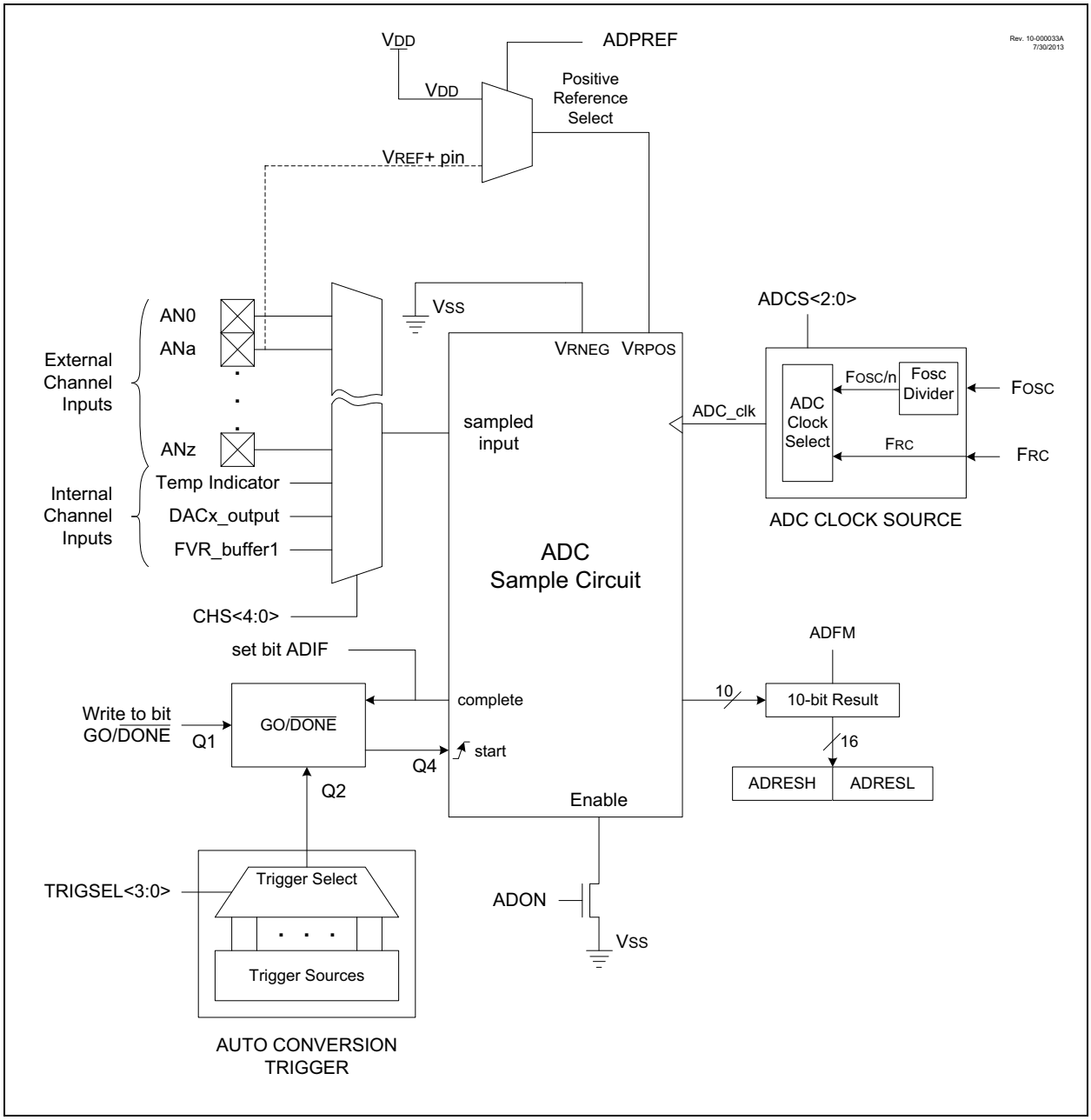

20.1 ADC Configuration

When configuring and using the ADC the following functions must be considered:

- Port configuration
- Channel selection
- ADC voltage reference selection
- ADC conversion clock source
- Interrupt control
- Result formatting

20.1.1 PORT CONFIGURATION

The ADC can be used to convert both analog and digital signals. When converting analog signals, the I/O pin will be configured for analog by setting the associated TRIS and ANSEL bits. Refer to **Section 14.0 "I/O Ports"** for more information.

Note:	Analog voltages on any pin that is defined as a digital input may cause the input buffer to conduct excess current.

20.1.2 CHANNEL SELECTION

There are several channel selections available:

- Six Port A channels
- Up to four Port B channels
- Up to eight Port C channels
- Temperature Indicator
- DAC output
- Fixed Voltage Reference (FVR)
- AVSS (Ground)

The CHS[5:0] bits of the ADCON0 register (Register 20-1) determine which channel is connected to the sample and hold circuit.

When changing channels, a delay is required before starting the next conversion. Refer to **Section 20.2 "ADC Operation"** for more information.

Note:	It is recommended that when switching from an ADC channel of a higher voltage to a channel of a lower voltage, that the user selects the VSS channel before connecting to the channel with the lower voltage. If the ADC does not have a dedicated VSS input channel, the VSS selection (DAC1R[4:0] = `b'00000'`) through the DAC output channel can be used. If the DAC is in use, a free input channel can be connected to VSS, and can be used in place of the DAC.

20.1.3 ADC VOLTAGE REFERENCE

The ADPREF[1:0] bits of the ADCON1 register provides control of the positive voltage reference. The positive voltage reference can be:

- VREF+ pin
- VDD
- FVR 2.048V
- FVR 4.096V (Not available on LF devices)

The ADPREF bit of the ADCON1 register provides control of the negative voltage reference. The negative voltage reference can be:

- VREF- pin
- VSS

See **Section 18.0 "Fixed Voltage Reference (FVR)"** for more details on the Fixed Voltage Reference.

20.1.4 CONVERSION CLOCK

The source of the conversion clock is software selectable via the ADCS[2:0] bits of the ADCON1 register. There are seven possible clock options:

- FOSC/2
- FOSC/4
- FOSC/8
- FOSC/16
- FOSC/32
- FOSC/64
- FRC (dedicated RC oscillator)

The time to complete one bit conversion is defined as TAD. One full 10-bit conversion requires 11.5 TAD periods as shown in Figure 20-2.

For correct conversion, the appropriate TAD specification must be met. Refer to Table 37-13 for more information. Table 20-1 gives examples of appropriate ADC clock selections.

Note:	Unless using the FRC, any changes in the system clock frequency will change the ADC clock frequency, which may adversely affect the ADC result.

TABLE 20-1: ADC CLOCK PERIOD (TAD) VS. DEVICE OPERATING FREQUENCIES

ADC Clock Period (TAD)		Device Frequency (FOSC)					
ADC Clock Source	ADCS[2:0]	32 MHz	20 MHz	16 MHz	8 MHz	4 MHz	1 MHz
FOSC/2	000	62.5ns(2)	100 ns(2)	125 ns(2)	250 ns(2)	500 ns(2)	2.0 μs
FOSC/4	100	125 ns(2)	200 ns(2)	250 ns(2)	500 ns(2)	1.0 μs	4.0 μs
FOSC/8	001	0.5 μs(2)	400 ns(2)	0.5 μs(2)	1.0 μs	2.0 μs	8.0 μs(3)
FOSC/16	101	800 ns	800 ns	1.0 μs	2.0 μs	4.0 μs	16.0 μs(3)
FOSC/32	010	1.0 μs	1.6 μs	2.0 μs	4.0 μs	8.0 μs(3)	32.0 μs(2)
FOSC/64	110	2.0 μs	3.2 μs	4.0 μs	8.0 μs(3)	16.0 μs(2)	64.0 μs(2)
FRC	x11	1.0-6.0 μs(1,4)	1.0-6.0 μs(1,4)	1.0-6.0 μs(1,4)	1.0-6.0 μs(1,4)	1.0-6.0 μs(1,4)	1.0-6.0 μs(1,4)

Legend: Shaded cells are outside of recommended range.

Note 1: See TAD parameter for FRC source typical TAD value.

2: These values violate the required TAD time.

3: Outside the recommended TAD time.

4: The ADC clock period (TAD) and total ADC conversion time can be minimized when the ADC clock is derived from the system clock FOSC. However, the FRC oscillator source must be used when conversions are to be performed with the device in Sleep mode.

FIGURE 20-2: ANALOG-TO-DIGITAL CONVERSION TAD CYCLES

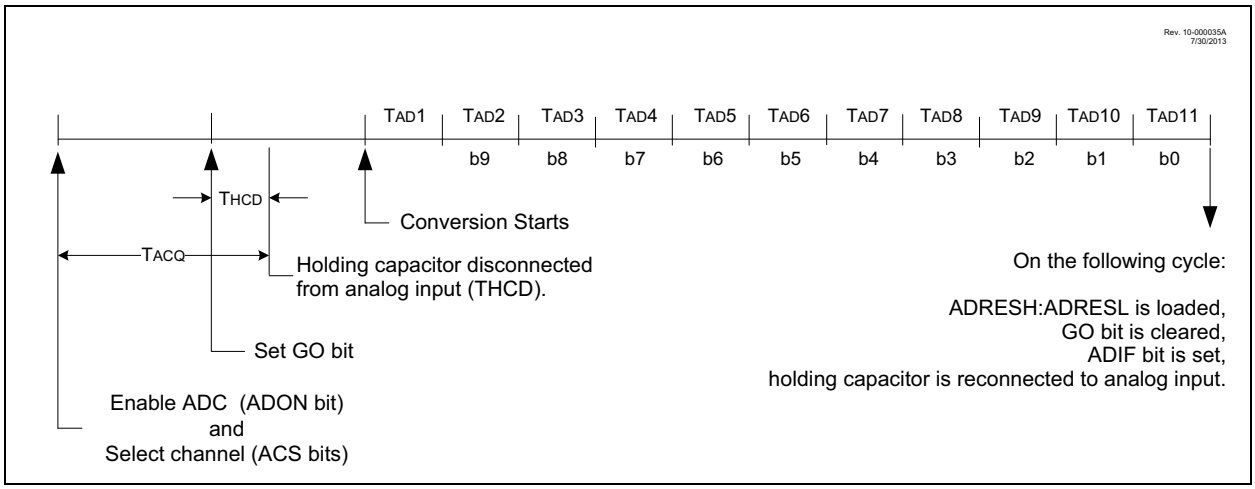

20.1.5 INTERRUPTS

The ADC module allows for the ability to generate an interrupt upon completion of an Analog-to-Digital conversion. The ADC Interrupt Flag is the ADIF bit in the PIR1 register. The ADC Interrupt Enable is the ADIE bit in the PIE1 register. The ADIF bit must be cleared in software.

> **Note 1:** The ADIF bit is set at the completion of every conversion, regardless of whether or not the ADC interrupt is enabled.
>
> **2:** The ADC operates during Sleep only when the FRC oscillator is selected.

This interrupt can be generated while the device is operating or while in Sleep. If the device is in Sleep, the interrupt will wake-up the device. Upon waking from Sleep, the next instruction following the `SLEEP` instruction is always executed. If the user is attempting to wake-up from Sleep and resume in-line code execution, the ADIE bit of the PIE1 register and the PEIE bit of the INTCON register must both be set and the GIE bit of the INTCON register must be cleared. If all three of these bits are set, the execution will switch to the Interrupt Service Routine (ISR).

20.1.6 RESULT FORMATTING

The 10-bit ADC conversion result can be supplied in two formats, left justified or right justified. The ADFM bit of the ADCON1 register controls the output format.

Figure 20-3 shows the two output formats.

FIGURE 20-3: 10-BIT ADC CONVERSION RESULT FORMAT

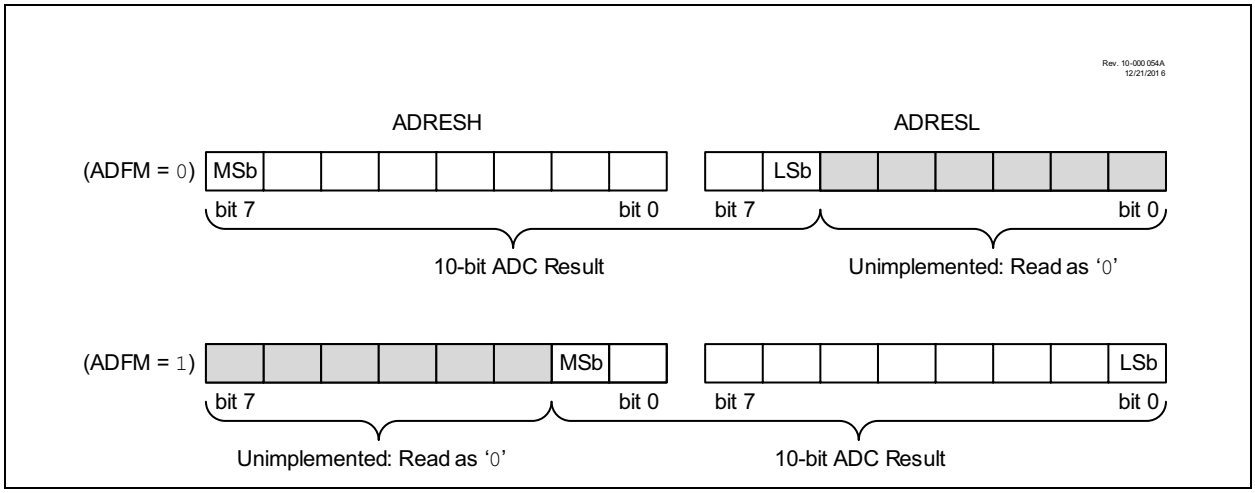

20.2 ADC Operation

20.2.1 STARTING A CONVERSION

To enable the ADC module, the ADON bit of the ADCON0 register must be set to a '1'. Setting the GO/$\overline{\text{DONE}}$ bit of the ADCON0 register to a '1' will start the Analog-to-Digital conversion.

Note: The GO/$\overline{\text{DONE}}$ bit will not be set in the same instruction that turns on the ADC. Refer to **Section 20.2.5 "ADC Conversion Procedure"**.

20.2.2 COMPLETION OF A CONVERSION

When the conversion is complete, the ADC module will:

- Clear the GO/$\overline{\text{DONE}}$ bit
- Set the ADIF Interrupt Flag bit
- Update the ADRESH and ADRESL registers with new conversion result

Note: A device Reset forces all registers to their Reset state. Thus, the ADC module is turned off and any pending conversion is terminated.

20.2.3 ADC OPERATION DURING SLEEP

The ADC module can operate during Sleep. This requires the ADC clock source to be set to the FRC option. When the FRC oscillator source is selected, the ADC waits one additional instruction before starting the conversion. This allows the `SLEEP` instruction to be executed, which can reduce system noise during the conversion. If the ADC interrupt is enabled, the device will wake-up from Sleep when the conversion completes. If the ADC interrupt is disabled, the ADC module is turned off after the conversion completes, although the ADON bit remains set.

When the ADC clock source is something other than FRC, a `SLEEP` instruction causes the present conversion to be aborted and the ADC module is turned off, although the ADON bit remains set.

20.2.4 AUTO-CONVERSION TRIGGER

The Auto-conversion Trigger allows periodic ADC measurements without software intervention. When a rising edge of the selected source occurs, the GO/$\overline{\text{DONE}}$ bit is set by hardware.

The Auto-conversion Trigger source is selected with the ADACT[3:0] bits of the ADACT register.

Using the Auto-conversion Trigger does not assure proper ADC timing. It is the user's responsibility to ensure that the ADC timing requirements are met.

See Table 20-2 for auto-conversion sources.

Note: The Auto-conversion feature is not available while the device is in Sleep mode.

TABLE 20-2: ADC AUTO-CONVERSION TABLE

ADACT VALUE	SOURCE/ PERIPHERAL	DESCRIPTION
0x00	Disabled	External Trigger Disabled
0x01	ADACTPPS	Pin Selected by ADACTPPS
0x02	TMR0	Timer0 overflow condition
0x03	TMR1	Timer1 overflow condition
0x04	TMR2	Match between Timer2 postscaled value and PR2
0x05	CCP1	CCP1 output
0x06	CCP2	CCP2 output
0x07	PWM3	PWM3 output
0x08	PWM4	PWM4 output
0x09	PWM5	PWM5 output
0x0A	PWM6	PWM6 output
0x0B	NCO1	NCO1 output
0x0C	C1OUT	Comparator C1 output
0x0D	C2OUT	Comparator C2 output
0x0E	IOCIF	Interrupt-on change flag trigger
0x0F	CLC1	CLC1 output
0x10	CLC2	CLC2 output
0x11	CLC3	CLC3 output
0x12	CLC4	CLC4 output
0x13-0xFF	Reserved	Reserved, do not use

© 2017-2021 Microchip Technology Inc.

20.2.5 ADC CONVERSION PROCEDURE

This is an example procedure for using the ADC to perform an Analog-to-Digital conversion:

1. Configure Port:
   - Disable pin output driver (Refer to the TRIS register)
   - Configure pin as analog (Refer to the ANSEL register)
2. Configure the ADC module:
   - Select ADC conversion clock
   - Select voltage reference
   - Select ADC input channel
   - Turn on ADC module
3. Configure ADC interrupt (optional):
   - Clear ADC interrupt flag
   - Enable ADC interrupt
   - Enable peripheral interrupt
   - Enable global interrupt(1)
4. Wait the required acquisition time(2).
5. Start conversion by setting the GO/$\overline{\text{DONE}}$ bit.
6. Wait for ADC conversion to complete by one of the following:
   - Polling the GO/$\overline{\text{DONE}}$ bit
   - Waiting for the ADC interrupt
7. Read ADC Result.
8. Clear the ADC interrupt flag (required if interrupt is enabled).

Note 1: The global interrupt can be disabled if the user is attempting to wake-up from Sleep and resume in-line code execution.

2: Refer to **Section 20.3 "ADC Acquisition Requirements"**.

EXAMPLE 20-1: ADC CONVERSION

```
;This code block configures the ADC
;for polling, Vdd and Vss references, FRC
;oscillator and AN0 input.
;
;Conversion start & polling for completion ;
are included.
;
BANKSEL    ADCON1        ;
MOVLW      B'11110000'   ;Right justify, FRC
                         ;oscillator
MOVWF      ADCON1        ;Vdd and Vss Vref
BANKSEL    TRISA         ;
BSF        TRISA,0       ;Set RA0 to input
BANKSEL    ANSELA        ;
BSF        ANSELA,0      ;Set RA0 to analog
BANKSEL    ADCON0        ;
MOVLW      B'00000001'   ;Select channel AN0
MOVWF      ADCON0        ;Turn ADC On
CALL       SampleTime    ;Acquisiton delay
BSF        ADCON0,ADGO   ;Start conversion
BTFSC      ADCON0,ADGO   ;Is conversion done?
GOTO       $-1           ;No, test again
BANKSEL    ADRESH        ;
MOVF       ADRESH,W      ;Read upper 2 bits
MOVWF      RESULTHI      ;store in GPR space
BANKSEL    ADRESL        ;
MOVF       ADRESL,W      ;Read lower 8 bits
MOVWF      RESULTLO      ;Store in GPR space
```

20.3 ADC Acquisition Requirements

For the ADC to meet its specified accuracy, the charge holding capacitor (CHOLD) must be allowed to fully charge to the input channel voltage level. The Analog Input model is shown in Figure 20-4. The source impedance (RS) and the internal sampling switch (RSS) impedance directly affect the time required to charge the capacitor CHOLD. The sampling switch (RSS) impedance varies over the device voltage (VDD), refer to Figure 20-4. **The maximum recommended impedance for analog sources is 10 kΩ.** As the source impedance is decreased, the acquisition time may be decreased. After the analog input channel is selected (or changed), an ADC acquisition must be done before the conversion can be started. To calculate the minimum acquisition time, Equation 20-1 may be used. This equation assumes that 1/2 LSb error is used (1024 steps for the ADC). The 1/2 LSb error is the maximum error allowed for the ADC to meet its specified resolution.

EQUATION 20-1: ACQUISITION TIME EXAMPLE

Assumptions: *Temperature = 50°C and external impedance of 10kΩ 5.0V VDD*

$$\begin{aligned} T_{ACQ} &= \text{Amplifier Settling Time} + \text{Hold Capacitor Charging Time} + \text{Temperature Coefficient} \\ &= T_{AMP} + T_C + T_{COFF} \\ &= 2\mu s + T_C + [(\text{Temperature} - 25°C)(0.05\mu s/°C)] \end{aligned}$$

The value for TC can be approximated with the following equations:

$$V_{APPLIED}\left(1 - \frac{1}{(2^{n+1}) - 1}\right) = V_{CHOLD}$$ *;[1] VCHOLD charged to within 1/2 lsb*

$$V_{APPLIED}\left(1 - e^{\frac{-T_C}{RC}}\right) = V_{CHOLD}$$ *;[2] VCHOLD charge response to VAPPLIED*

$$V_{APPLIED}\left(1 - e^{\frac{-T_C}{RC}}\right) = V_{APPLIED}\left(1 - \frac{1}{(2^{n+1}) - 1}\right)$$ *;combining [1] and [2]*

Note: Where n = number of bits of the ADC.

Solving for TC:

$$\begin{aligned} T_C &= -C_{HOLD}(R_{IC} + R_{SS} + R_S)\ \ln(1/2047) \\ &= -10pF(1k\Omega + 7k\Omega + 10k\Omega)\ \ln(0.0004885) \\ &= 1.37\mu s \end{aligned}$$

Therefore:

$$\begin{aligned} T_{ACQ} &= 2\mu s + 1.37 + [(50°C - 25°C)(0.05\mu s/°C)] \\ &= 4.62\mu s \end{aligned}$$

Note 1: The VAPPLIED has no effect on the equation, since it cancels itself out.

2: The charge holding capacitor (CHOLD) is not discharged after each conversion.

3: The maximum recommended impedance for analog sources is 10 kΩ. This is required to meet the pin leakage specification.

FIGURE 20-4: ANALOG INPUT MODEL

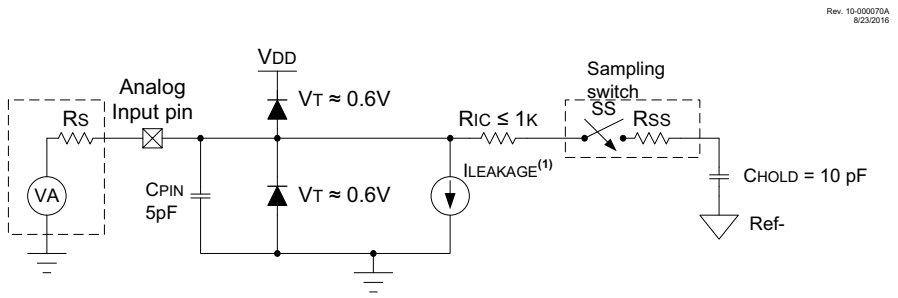

Legend:

CHOLD	= Sample/Hold Capacitance
CPIN	= Input Capacitance
ILEAKAGE	= Leakage Current at the pin due to varies injunctions
RIC	= Interconnect Resistance
RSS	= Resistance of Sampling switch
SS	= Sampling Switch
VT	= Threshold Voltage
RS	= Source Resistance

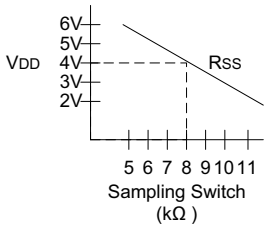

Note 1: See Refer to **Section 37.0 "Electrical Specifications"**.

FIGURE 20-5: ADC TRANSFER FUNCTION

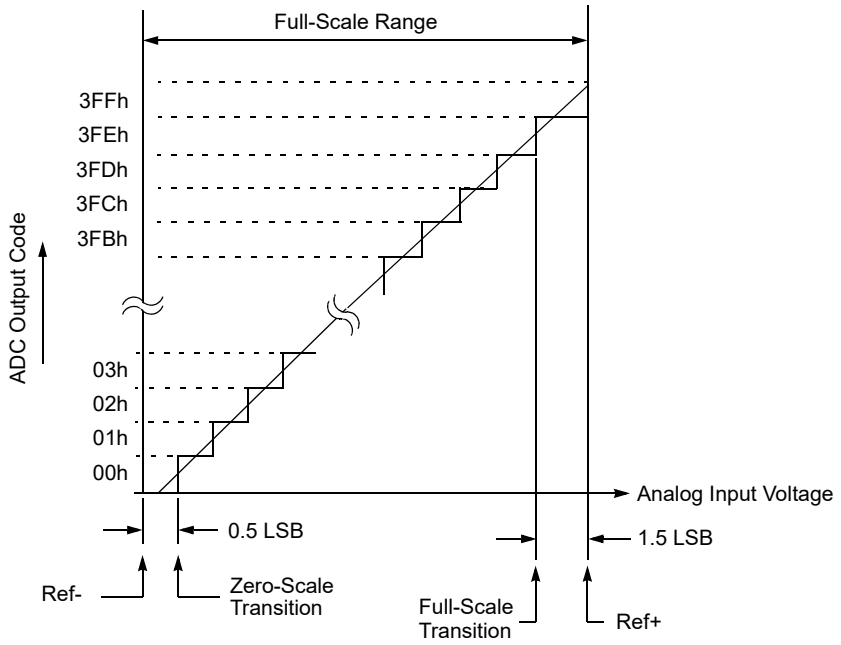

20.4 Register Definitions: ADC Control

REGISTER 20-1: ADCON0: ADC CONTROL REGISTER 0

R/W-0/0	R/W-0/0	R/W-0/0	R/W-0/0	R/W-0/0	R/W-0/0	R/W-0/0	R/W-0/0
CHS[5:0]						GO/$\overline{\text{DONE}}$	ADON
bit 7							bit 0

Legend:		
R = Readable bit	W = Writable bit	U = Unimplemented bit, read as ‘0’
u = Bit is unchanged	x = Bit is unknown	-n/n = Value at POR and BOR/Value at all other Resets
‘1’ = Bit is set	‘0’ = Bit is cleared	

bit 7-2 **CHS[5:0]:** Analog Channel Select bits
- 111111 = FVR Buffer 2 reference voltage(2)
- 111110 = FVR 1Buffer 1 reference voltage(2)
- 111101 = DAC1 output voltage(1)
- 111100 = Temperature sensor output(3)
- 111011 = AVss (Analog Ground)
- 010111 = RC7(4)
- 010110 = RC6(4)
- 010101 = RC5
- 010100 = RC4
- 010011 = RC3
- 010010 = RC2
- 010001 = RC1
- 010000 = RC0
- 001111 = RB7(4)
- 001110 = RB6(4)
- 001101 = RB5(4)
- 001100 = RB4(4)
- 001011-000110 = Reserved
- 000101 = RA5
- 000100 = RA4
- 000011 = RA3
- 000010 = RA2
- 000001 = RA1
- 000000 = RA0

bit 1 **GO/$\overline{\text{DONE}}$:** ADC Conversion Status bit
- 1 = ADC conversion cycle in progress. Setting this bit starts an ADC conversion cycle. This bit is automatically cleared by hardware when the ADC conversion has completed.
- 0 = ADC conversion completed/not in progress

bit 0 **ADON:** ADC Enable bit
- 1 = ADC is enabled
- 0 = ADC is disabled and consumes no operating current

Note 1: See **Section 21.0 “5-Bit Digital-to-Analog Converter (DAC1) Module”** for more information.
2: See **Section 18.0 “Fixed Voltage Reference (FVR)”** for more information.
3: See **Section 19.0 “Temperature Indicator Module”** for more information.
4: Present only on the PIC16(L)F15344.

REGISTER 20-2: ADCON1: ADC CONTROL REGISTER 1

R/W-0/0	R/W-0/0	R/W-0/0	R/W-0/0	U-0	U-0	R/W-0/0	R/W-0/0
ADFM	ADCS[2:0]			—	—	ADPREF[1:0]	
bit 7							bit 0

Legend:		
R = Readable bit	W = Writable bit	U = Unimplemented bit, read as ‘0’
u = Bit is unchanged	x = Bit is unknown	-n/n = Value at POR and BOR/Value at all other Resets
‘1’ = Bit is set	‘0’ = Bit is cleared	

bit 7 **ADFM:** ADC Result Format Select bit
- 1 = Right justified. Six Most Significant bits of ADRESH are set to ‘0’ when the conversion result is loaded.
- 0 = Left justified. Six Least Significant bits of ADRESL are set to ‘0’ when the conversion result is loaded.

bit 6-4 **ADCS[2:0]:** ADC Conversion Clock Select bits
- 111 = FRC (dedicated RC oscillator)
- 110 = F_{OSC}/64
- 101 = F_{OSC}/16
- 100 = F_{OSC}/4
- 011 = FRC (dedicated RC oscillator)
- 010 = F_{OSC}/32
- 001 = F_{OSC}/8
- 000 = F_{OSC}/2

bit 3-2 **Unimplemented:** Read as ‘0’

bit 1-0 **ADPREF[1:0]:** ADC Positive Voltage Reference Configuration bits
- 11 = V_{REF}+ is connected to internal Fixed Voltage Reference (FVR) module(1)
- 10 = V_{REF}+ is connected to external V_{REF}+ pin(1)
- 01 = Reserved
- 00 = V_{REF}+ is connected to V_{DD}

Note 1: When selecting the V_{REF}+ pin as the source of the positive reference, be aware that a minimum voltage specification exists. See Table 37-14 for details.

REGISTER 20-3: ADACT: A/D AUTO-CONVERSION TRIGGER

U-0	U-0	U-0	R/W-0/0	R/W-0/0	R/W-0/0	R/W-0/0	R/W-0/0
—	—	—	—	ADACT[3:0]			
bit 7							bit 0

Legend:		
R = Readable bit	W = Writable bit	U = Unimplemented bit, read as ‘0’
u = Bit is unchanged	x = Bit is unknown	-n/n = Value at POR and BOR/Value at all other Resets
‘1’ = Bit is set	‘0’ = Bit is cleared	

bit 7-4 **Unimplemented:** Read as ‘0’

bit 3-0 **ADACT[3:0]:** Auto-Conversion Trigger Selection bits(1) (see Table 20-2)

Note 1: This is a rising edge sensitive input for all sources.

REGISTER 20-4: ADRESH: ADC RESULT REGISTER HIGH (ADRESH) ADFM = 0

R/W-x/u	R/W-x/u	R/W-x/u	R/W-x/u	R/W-x/u	R/W-x/u	R/W-x/u	R/W-x/u
ADRES[9:2]							
bit 7							bit 0

Legend:		
R = Readable bit	W = Writable bit	U = Unimplemented bit, read as ‘0’
u = Bit is unchanged	x = Bit is unknown	-n/n = Value at POR and BOR/Value at all other Resets
‘1’ = Bit is set	‘0’ = Bit is cleared	

bit 7-0 **ADRES[9:2]**: ADC Result Register bits
Upper eight bits of 10-bit conversion result

REGISTER 20-5: ADRESL: ADC RESULT REGISTER LOW (ADRESL) ADFM = 0

R/W-x/u	R/W-x/u	R/W-x/u	R/W-x/u	R/W-x/u	R/W-x/u	R/W-x/u	R/W-x/u
ADRES[1:0]		—	—	—	—	—	—
bit 7							bit 0

Legend:		
R = Readable bit	W = Writable bit	U = Unimplemented bit, read as ‘0’
u = Bit is unchanged	x = Bit is unknown	-n/n = Value at POR and BOR/Value at all other Resets
‘1’ = Bit is set	‘0’ = Bit is cleared	

bit 7-6 **ADRES[1:0]**: ADC Result Register bits
Lower two bits of 10-bit conversion result

bit 5-0 **Reserved**: Do not use.

REGISTER 20-6: ADRESH: ADC RESULT REGISTER HIGH (ADRESH) ADFM = 1

R/W-x/u	R/W-x/u	R/W-x/u	R/W-x/u	R/W-x/u	R/W-x/u	R/W-x/u	R/W-x/u
—	—	—	—	—	—	ADRES[9:8]	
bit 7							bit 0

Legend:		
R = Readable bit	W = Writable bit	U = Unimplemented bit, read as ‘0’
u = Bit is unchanged	x = Bit is unknown	-n/n = Value at POR and BOR/Value at all other Resets
‘1’ = Bit is set	‘0’ = Bit is cleared	

bit 7-2 **Reserved**: Do not use.

bit 1-0 **ADRES[9:8]**: ADC Result Register bits
Upper two bits of 10-bit conversion result

REGISTER 20-7: ADRESL: ADC RESULT REGISTER LOW (ADRESL) ADFM = 1

R/W-x/u	R/W-x/u	R/W-x/u	R/W-x/u	R/W-x/u	R/W-x/u	R/W-x/u	R/W-x/u
ADRES[7:0]							
bit 7							bit 0

Legend:		
R = Readable bit	W = Writable bit	U = Unimplemented bit, read as ‘0’
u = Bit is unchanged	x = Bit is unknown	-n/n = Value at POR and BOR/Value at all other Resets
‘1’ = Bit is set	‘0’ = Bit is cleared	

bit 7-0 **ADRES[7:0]**: ADC Result Register bits
Lower eight bits of 10-bit conversion result

TABLE 20-3: SUMMARY OF REGISTERS ASSOCIATED WITH ADC

Name	Bit 7	Bit 6	Bit 5	Bit 4	Bit 3	Bit 2	Bit 1	Bit 0	Register on Page
INTCON	GIE	PEIE	—	—	—	—	—	INTEDG	125
PIE1	OSFIE	CSWIE	—	—	—	—	—	ADIE	127
PIR1	OSFIF	CSWIF	—	—	—	—	—	ADIF	135
TRISA	—	—	TRISA5	TRISA4	—	TRISA2	TRISA1	TRISA0	179
TRISB(1)	TRISB7	TRISB6	TRISB5	TRISB4	—	—	—	—	185
TRISC	TRISC7(1)	TRISC6(1)	TRISC5	TRISC4	TRISC3	TRISC2	TRISC1	TRISC0	190
ANSELA	—	—	ANSA5	ANSA4	—	ANSA2	ANSA1	ANSA0	180
ANSELB(1)	—	—	—	ANSB4	ANSB3	ANSB2	ANSB1	ANSB0	186
ANSELC	ANSC7(1)	ANSC6(1)	ANSC5	ANSC4	ANSC3	ANSC2	ANSC1	ANSC0	191
ADCON0	CHS[5:0]						GO/$\overline{\text{DONE}}$	ADON	234
ADCON1	ADFM	ADCS[2:0]			—	—	ADPREF[1:0]		235
ADACT	—	—	—	—	ADACT[3:0]				236
ADRESH	ADRESH[7:0]								237
ADRESL	ADRESL[7:0]								237
FVRCON	FVREN	FVRRDY	TSEN	TSRNG	CDAFVR[1:0]		ADFVR[1:0]		222
DAC1CON1	—	—	—	DAC1R[4:0]					243
OSCSTAT1	EXTOR	HFOR	MFOR	LFOR	SOR	ADOR	—	PLLR	116

Legend: — = unimplemented read as '0'. Shaded cells are not used for the ADC module.

Note 1: Present on PIC16(L)F15344 only.

21.0 5-BIT DIGITAL-TO-ANALOG CONVERTER (DAC1) MODULE

The Digital-to-Analog Converter supplies a variable voltage reference, ratiometric with the input source, with 32 selectable output levels.

The input of the DAC can be connected to:

- External VREF pins
- VDD supply voltage
- FVR (Fixed Voltage Reference)

The output of the DAC can be configured to supply a reference voltage to the following:

- Comparator positive input
- ADC input channel
- DAC1OUT pin

The Digital-to-Analog Converter (DAC) is enabled by setting the DAC1EN bit of the DAC1CON0 register.

21.1 Output Voltage Selection

The DAC has 32 voltage level ranges. The 32 levels are set with the DAC1R[4:0] bits of the DAC1CON1 register.

The DAC output voltage is determined by Equation 21-1:

EQUATION 21-1: DAC OUTPUT VOLTAGE

$$V_{OUT} = \left(V_{SOURCE+} - V_{SOURCE-} \times \frac{DAC1R\langle 4:0\rangle}{2^5}\right) + (V_{SOURCE-})$$

$$V_{SOURCE+} = V_{DD} \text{ or } V_{REF+} \text{ or } FVR$$

$$V_{SOURCE-} = V_{SS} \text{ or } V_{REF-}$$

21.2 Ratiometric Output Level

The DAC output value is derived using a resistor ladder with each end of the ladder tied to a positive and negative voltage reference input source. If the voltage of either input source fluctuates, a similar fluctuation will result in the DAC output value.

The value of the individual resistors within the ladder can be found in Table 37-15.

21.3 DAC Voltage Reference Output

The DAC voltage can be output to the DAC1OUT1/2 pins by setting the DAC1OE1/2 bits of the DAC1CON0 register, respectively. Selecting the DAC reference voltage for output on the DAC1OUT1/2 pins automatically overrides the digital output buffer and digital input threshold detector functions, disables the weak pull-up, and disables the current-controlled drive function of that pin. Reading the DAC1OUT1/2 pin when it has been configured for DAC reference voltage output will always return a ‘0’.

Due to the limited current drive capability, a buffer must be used on the DAC voltage reference output for external connections to the DAC1OUT1/2 pins. Figure 21-2 shows an example buffering technique.

FIGURE 21-1: DIGITAL-TO-ANALOG CONVERTER BLOCK DIAGRAM

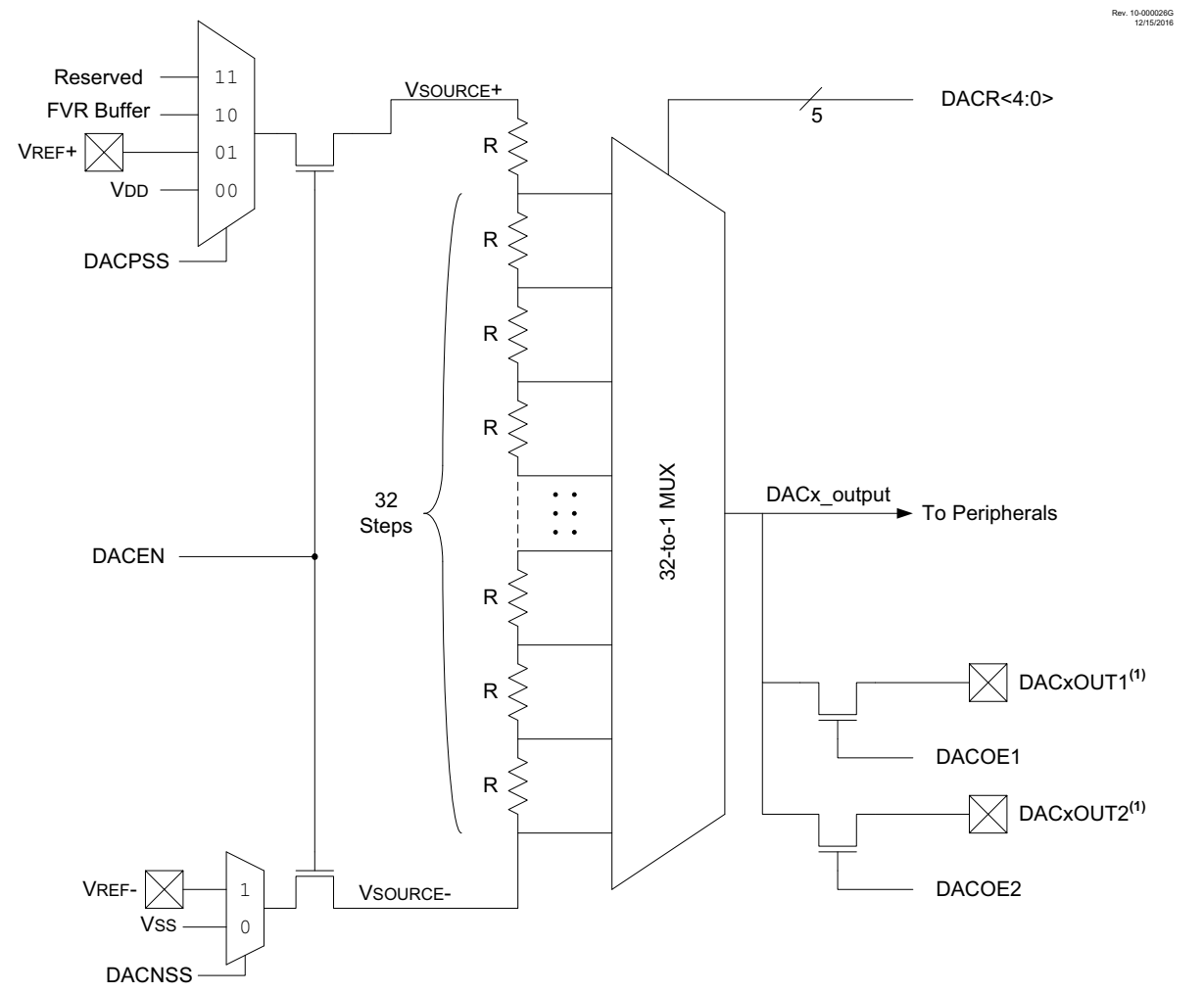

Note 1: The unbuffered DACx_output is provided on the DACxOUT pin(s).

FIGURE 21-2: VOLTAGE REFERENCE OUTPUT BUFFER EXAMPLE

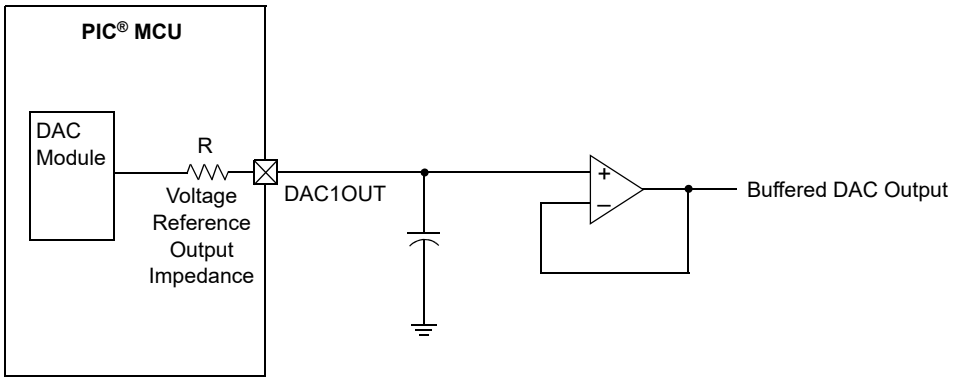

21.4 Operation During Sleep

The DAC continues to function during Sleep. When the device wakes up from Sleep through an interrupt or a Watchdog Timer time-out, the contents of the DAC1CON0 register are not affected.

21.5 Effects of a Reset

A device Reset affects the following:

- DAC is disabled.
- DAC output voltage is removed from the DAC1OUT1/2 pins.
- The DAC1R[4:0] range select bits are cleared.

21.6 Register Definitions: DAC Control

REGISTER 21-1: DAC1CON0: VOLTAGE REFERENCE CONTROL REGISTER 0

R/W-0/0	U-0	R/W-0/0	R/W-0/0	R/W-0/0	R/W-0/0	U-0	R/W-0/0
DAC1EN	—	DAC1OE1	DAC1OE2	DAC1PSS[1:0]		—	DAC1NSS
bit 7							bit 0

Legend:		
R = Readable bit	W = Writable bit	U = Unimplemented bit, read as ‘0’
u = Bit is unchanged	x = Bit is unknown	-n/n = Value at POR and BOR/Value at all other Resets
‘1’ = Bit is set	‘0’ = Bit is cleared	

bit 7 **DAC1EN:** DAC1 Enable bit
1 = DAC is enabled
0 = DAC is disabled

bit 6 **Unimplemented:** Read as ‘0’

bit 5 **DAC1OE1:** DAC1 Voltage Output 1 Enable bit
1 = DAC voltage level is an output on the DAC1OUT1 pin
0 = DAC voltage level is disconnected from the DAC1OUT1 pin

bit 4 **DAC1OE2:** DAC1 Voltage Output 1 Enable bit
1 = DAC voltage level is an output on the DAC1OUT2 pin
0 = DAC voltage level is disconnected from the DAC1OUT2 pin

bit 3-2 **DAC1PSS[1:0]:** DAC1 Positive Source Select bits
11 = Reserved, do not use
10 = FVR output
01 = V_{REF}+ pin
00 = V_{DD}

bit 1 **Unimplemented:** Read as ‘0’

bit 0 **DAC1NSS:** Read as ‘0’

REGISTER 21-2: DAC1CON1: VOLTAGE REFERENCE CONTROL REGISTER 1

U-0	U-0	U-0	R/W-0/0	R/W-0/0	R/W-0/0	R/W-0/0	R/W-0/0
—	—	—	DAC1R[4:0]				
bit 7							bit 0

Legend:		
R = Readable bit	W = Writable bit	U = Unimplemented bit, read as ‘0’
u = Bit is unchanged	x = Bit is unknown	-n/n = Value at POR and BOR/Value at all other Resets
‘1’ = Bit is set	‘0’ = Bit is cleared	

bit 7-5 **Unimplemented:** Read as ‘0’

bit 4-0 **DAC1R[4:0]:** DAC1 Voltage Output Select bits
$V_{OUT} = (V_{SRC}+ - V_{SRC}-)*(DAC1R[4:0]/32) + V_{SRC}$

TABLE 21-1: SUMMARY OF REGISTERS ASSOCIATED WITH THE DAC1 MODULE

Name	Bit 7	Bit 6	Bit 5	Bit 4	Bit 3	Bit 2	Bit 1	Bit 0	Register on page
DAC1CON0	DAC1EN	—	DAC1OE1	DAC1OE2	DAC1PSS[1:0]		—	DAC1NSS	243
DAC1CON1	—	—	—	DAC1R[4:0]					243
CM1PSEL	—	—	—	—	—	PCH[2:0]			263
CM2PSEL	—	—	—	—	—	PCH[2:0]			263

Legend: — = Unimplemented location, read as '0'. Shaded cells are not used with the DAC module.

22.0 NUMERICALLY CONTROLLED OSCILLATOR (NCO) MODULE

The Numerically Controlled Oscillator (NCO) module is a timer that uses overflow from the addition of an increment value to divide the input frequency. The advantage of the addition method over simple counter driven timer is that the output frequency resolution does not vary with the divider value. The NCO is most useful for application that requires frequency accuracy and fine resolution at a fixed duty cycle.

Features of the NCO include:

- 20-bit Increment Function
- Fixed Duty Cycle mode (FDC) mode
- Pulse Frequency (PF) mode
- Output Pulse Width Control
- Multiple Clock Input Sources
- Output Polarity Control
- Interrupt Capability

Figure 22-1 is a simplified block diagram of the NCO module.

FIGURE 22-1: NUMERICALLY CONTROLLED OSCILLATOR MODULE SIMPLIFIED BLOCK DIAGRAM

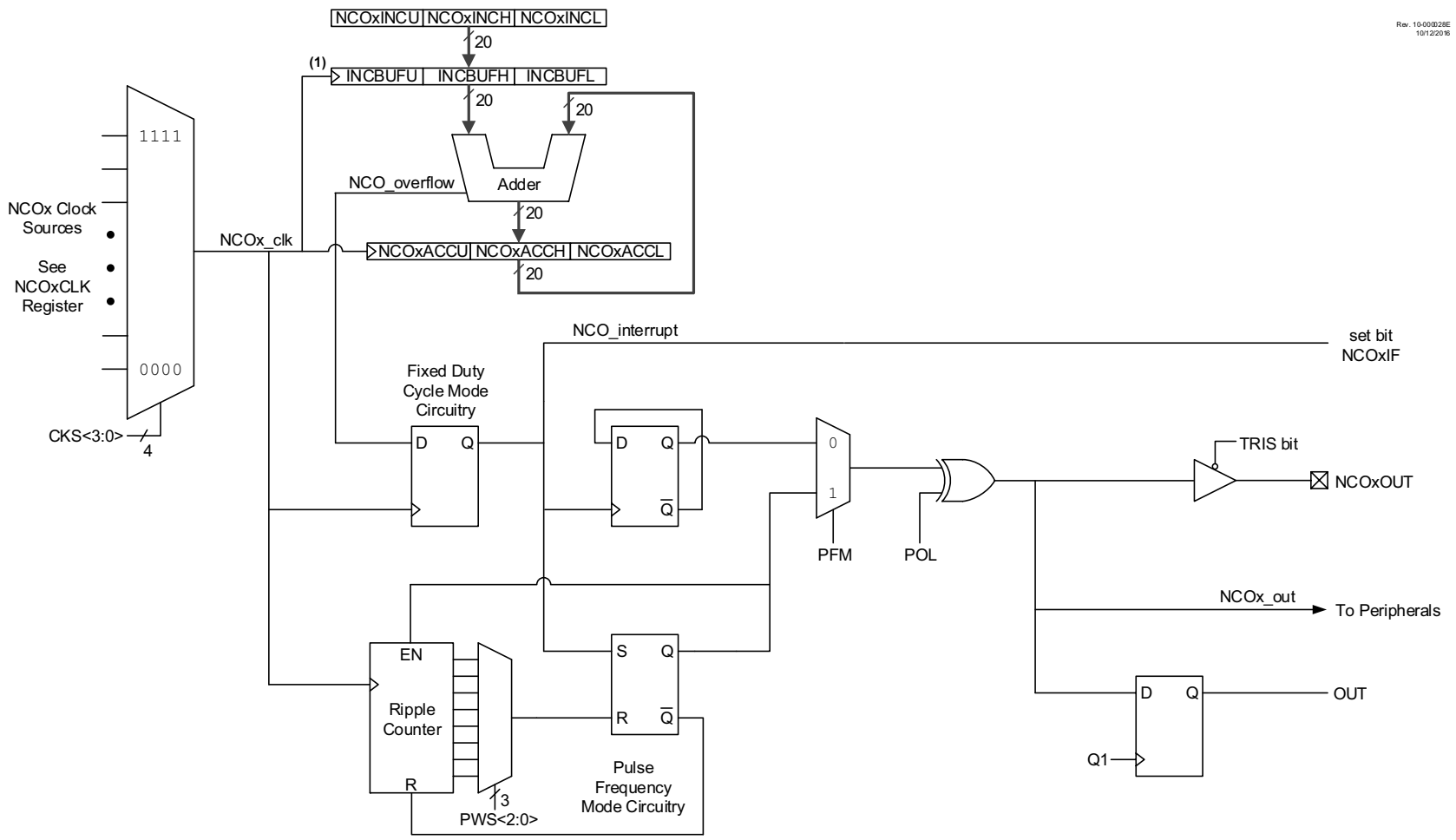

Note 1: The increment registers are double-buffered to allow for value changes to be made without first disabling the NCO module. The full increment value is loaded into the buffer registers on the second rising edge of the NCOx_clk signal that occurs immediately after a write to NCOxINCL register. The buffers are not user-accessible and are shown here for reference.

© 2017-2021 Microchip Technology Inc.

22.1 NCO OPERATION

The NCO operates by repeatedly adding a fixed value to an accumulator. Additions occur at the input clock rate. The accumulator will overflow with a carry periodically, which is the raw NCO output (NCO_overflow). This effectively reduces the input clock by the ratio of the addition value to the maximum accumulator value. See Equation 22-1.

The NCO output can be further modified by stretching the pulse or toggling a flip-flop. The modified NCO output is then distributed internally to other peripherals and can be optionally output to a pin. The accumulator overflow also generates an interrupt (NCO_overflow).

The NCO period changes in discrete steps to create an average frequency.

EQUATION 22-1: NCO OVERFLOW FREQUENCY

$$F_{OVERFLOW} = \frac{NCO\ Clock\ Frequency \times Increment\ Value}{2^{20}}$$

22.1.1 NCO CLOCK SOURCES

Clock sources available to the NCO include:

- HFINTOSC
- FOSC
- LC1_out
- LC2_out
- LC3_out
- LC4_out
- MFINTOSC (500 kHz)
- MFINTOSC (32 kHz)
- CLKR

The NCO clock source is selected by configuring the N1CKS[2:0] bits in the NCO1CLK register.

22.1.2 ACCUMULATOR

The accumulator is a 20-bit register. Read and write access to the accumulator is available through three registers:

- NCO1ACCL
- NCO1ACCH
- NCO1ACCU

22.1.3 ADDER

The NCO Adder is a full adder, which operates synchronously from the source clock. The addition of the previous result and the increment value replaces the accumulator value on the rising edge of each input clock.

22.1.4 INCREMENT REGISTERS

The increment value is stored in three registers making up a 20-bit incrementer. In order of LSB to MSB they are:

- NCO1INCL
- NCO1INCH
- NCO1INCU

When the NCO module is enabled, the NCO1INCU and NCO1INCH registers must be written first, then the NCO1INCL register. Writing to the NCO1INCL register initiates the increment buffer registers to be loaded simultaneously on the second rising edge of the NCO_clk signal.

The registers are readable and writable. The increment registers are double-buffered to allow value changes to be made without first disabling the NCO module.

When the NCO module is disabled, the increment buffers are loaded immediately after a write to the increment registers.

Note: The increment buffer registers are not user-accessible.

22.2 FIXED DUTY CYCLE MODE

In Fixed Duty Cycle (FDC) mode, every time the accumulator overflows (NCO_overflow), the output is toggled at a frequency rate half of the FOVERFLOW. This provides a 50% duty cycle, provided that the increment value remains constant. For more information, see Figure 22-2.

The FDC mode is selected by clearing the N1PFM bit in the NCO1CON register.

22.3 PULSE FREQUENCY MODE

In Pulse Frequency (PF) mode, every time the Accumulator overflows, the output becomes active for one or more clock periods. Once the clock period expires, the output returns to an inactive state. This provides a pulsed output. The output becomes active on the rising clock edge immediately following the overflow event. For more information, see Figure 22-2.

The value of the active and inactive states depends on the polarity bit, N1POL in the NCO1CON register.

The PF mode is selected by setting the N1PFM bit in the NCO1CON register.

22.3.1 OUTPUT PULSE WIDTH CONTROL

When operating in PF mode, the active state of the output can vary in width by multiple clock periods. Various pulse widths are selected with the N1PWS[2:0] bits in the NCO1CLK register.

When the selected pulse width is greater than the Accumulator overflow time frame, then NCO1 output does not toggle.

22.4 OUTPUT POLARITY CONTROL

The last stage in the NCO module is the output polarity. The N1POL bit in the NCO1CON register selects the output polarity. Changing the polarity while the interrupts are enabled will cause an interrupt for the resulting output transition.

The NCO output signal (NCO1_out) is available to the following peripherals:

- CLC
- CWG
- Timer1
- Timer2
- CLKR

22.5 Interrupts

When the accumulator overflows (NCO_overflow), the NCO Interrupt Flag bit, NCO1IF, of the PIR7 register is set. To enable the interrupt event (NCO_interrupt), the following bits must be set:

- N1EN bit of the NCO1CON register
- NCO1IE bit of the PIE7 register
- PEIE bit of the INTCON register
- GIE bit of the INTCON register

The interrupt must be cleared by software by clearing the NCO1IF bit in the Interrupt Service Routine.

22.6 Effects of a Reset

All of the NCO registers are cleared to zero as the result of a Reset.

22.7 Operation in Sleep

The NCO module operates independently from the system clock and will continue to run during Sleep, provided that the clock source selected remains active.

The HFINTOSC remains active during Sleep when the NCO module is enabled and the HFINTOSC is selected as the clock source, regardless of the system clock source selected.

In other words, if the HFINTOSC is simultaneously selected as the system clock and the NCO clock source, when the NCO is enabled, the CPU will go Idle during Sleep, but the NCO will continue to operate and the HFINTOSC will remain active.

This will have a direct effect on the Sleep mode current.

FIGURE 22-2: FDC OUTPUT MODE OPERATION DIAGRAM

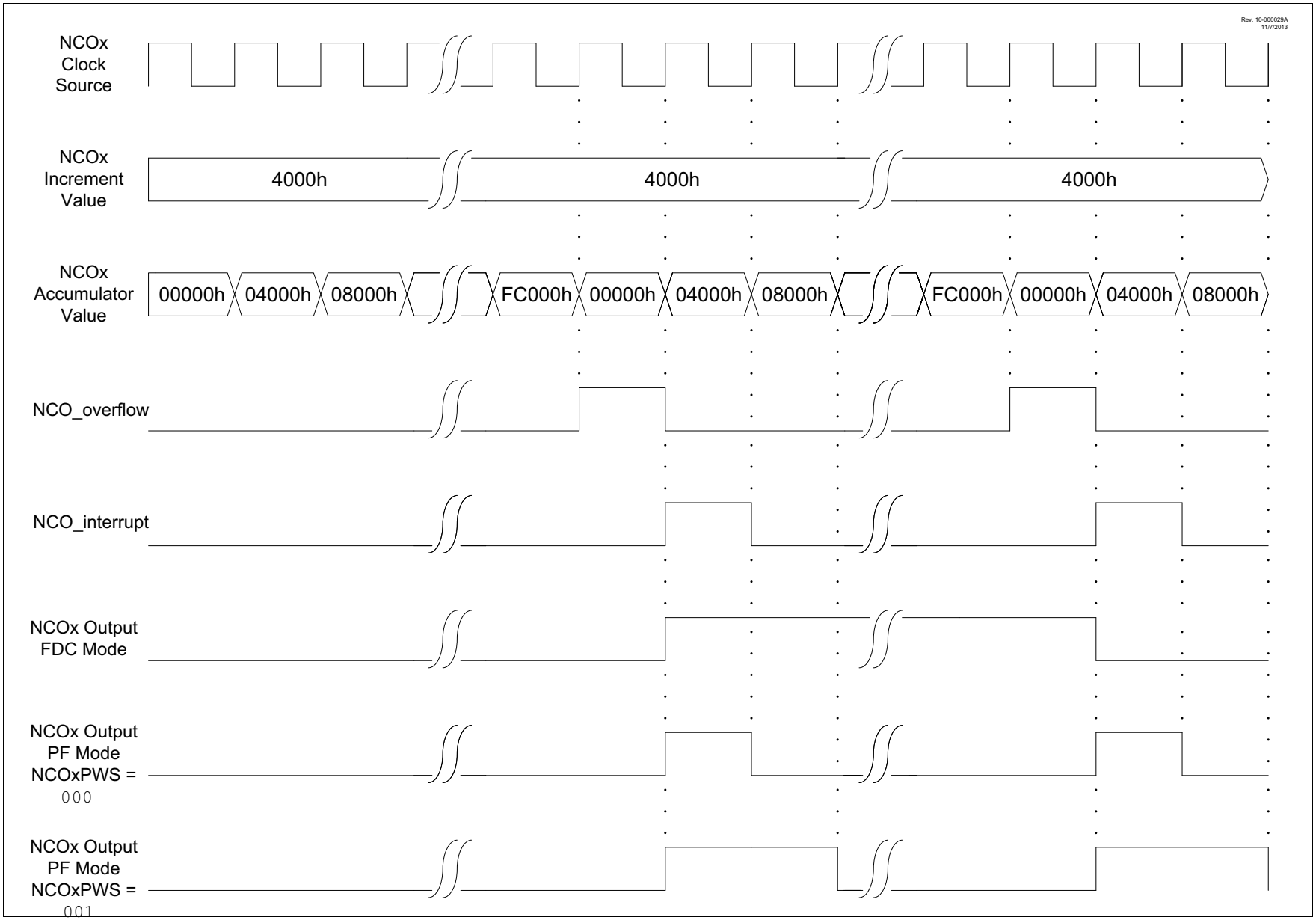

© 2017-2021 Microchip Technology Inc.

22.8 NCO Control Registers

REGISTER 22-1: NCO1CON: NCO CONTROL REGISTER

R/W-0/0	U-0	R-0/0	R/W-0/0	U-0	U-0	U-0	R/W-0/0
N1EN	—	N1OUT	N1POL	—	—	—	N1PFM
bit 7							bit 0

Legend:		
R = Readable bit	W = Writable bit	U = Unimplemented bit, read as ‘0’
u = Bit is unchanged	x = Bit is unknown	-n/n = Value at POR and BOR/Value at all other Resets
‘1’ = Bit is set	‘0’ = Bit is cleared	

bit 7 **N1EN:** NCO1 Enable bit
1 = NCO1 module is enabled
0 = NCO1 module is disabled

bit 6 **Unimplemented**: Read as ‘0’

bit 5 **N1OUT:** NCO1 Output bit
Displays the current output value of the NCO1 module.

bit 4 **N1POL:** NCO1 Polarity bit
1 = NCO1 output signal is inverted
0 = NCO1 output signal is not inverted

bit 3-1 **Unimplemented**: Read as ‘0’

bit 0 **N1PFM:** NCO1 Pulse Frequency Mode bit
1 = NCO1 operates in Pulse Frequency mode
0 = NCO1 operates in Fixed Duty Cycle mode, divide by 2

REGISTER 22-2: NCO1CLK: NCO1 INPUT CLOCK CONTROL REGISTER

R/W-0/0	R/W-0/0	R/W-0/0	U-0	R/W-0/0	R/W-0/0	R/W-0/0	R/W-0/0
N1PWS[2:0](1,2)			—	N1CKS[3:0]			
bit 7							bit 0

Legend:		
R = Readable bit	W = Writable bit	U = Unimplemented bit, read as ‘0’
u = Bit is unchanged	x = Bit is unknown	-n/n = Value at POR and BOR/Value at all other Resets
‘1’ = Bit is set	‘0’ = Bit is cleared	

bit 7-5 **N1PWS[2:0]:** NCO1 Output Pulse Width Select bits(1)
- 111 = NCO1 output is active for 128 input clock periods
- 110 = NCO1 output is active for 64 input clock periods
- 101 = NCO1 output is active for 32 input clock periods
- 100 = NCO1 output is active for 16 input clock periods
- 011 = NCO1 output is active for 8 input clock periods
- 010 = NCO1 output is active for 4 input clock periods
- 001 = NCO1 output is active for 2 input clock periods
- 000 = NCO1 output is active for 1 input clock period

bit 4 **Unimplemented:** Read as ‘0’

bit 3-0 **N1CKS[3:0]:** NCO1 Clock Source Select bits
- 1011-1111 = Reserved
- 1010 = LC4_out
- 1001 = LC3_out
- 1000 = LC2_out
- 0111 = LC1_out
- 0110 = CLKR
- 0101 = Reserved
- 0100 = MFINTOSC (32 kHz)
- 0011 = MFINTOSC (500 kHz)
- 0010 = LFINTOSC
- 0001 = HFINTOSC
- 0000 = FOSC

Note 1: N1PWS applies only when operating in Pulse Frequency mode.

REGISTER 22-3: NCO1ACCL: NCO1 ACCUMULATOR REGISTER – LOW BYTE

R/W-0/0	R/W-0/0	R/W-0/0	R/W-0/0	R/W-0/0	R/W-0/0	R/W-0/0	R/W-0/0
NCO1ACC[7:0]							
bit 7							bit 0

Legend:		
R = Readable bit	W = Writable bit	U = Unimplemented bit, read as ‘0’
u = Bit is unchanged	x = Bit is unknown	-n/n = Value at POR and BOR/Value at all other Resets
‘1’ = Bit is set	‘0’ = Bit is cleared	

bit 7-0 **NCO1ACC[7:0]:** NCO1 Accumulator, Low Byte

REGISTER 22-4: NCO1ACCH: NCO1 ACCUMULATOR REGISTER – HIGH BYTE

R/W-0/0	R/W-0/0	R/W-0/0	R/W-0/0	R/W-0/0	R/W-0/0	R/W-0/0	R/W-0/0
NCO1ACC[15:8]							
bit 7							bit 0

Legend:		
R = Readable bit	W = Writable bit	U = Unimplemented bit, read as ‘0’
u = Bit is unchanged	x = Bit is unknown	-n/n = Value at POR and BOR/Value at all other Resets
‘1’ = Bit is set	‘0’ = Bit is cleared	

bit 7-0 **NOC1ACC[15:8]:** NCO1 Accumulator, High Byte

REGISTER 22-5: NCO1ACCU: NCO1 ACCUMULATOR REGISTER – UPPER BYTE(1)

U-0	U-0	U-0	U-0	R/W-0/0	R/W-0/0	R/W-0/0	R/W-0/0
—	—	—	—	NCO1ACC[19:16]			
bit 7							bit 0

Legend:		
R = Readable bit	W = Writable bit	U = Unimplemented bit, read as ‘0’
u = Bit is unchanged	x = Bit is unknown	-n/n = Value at POR and BOR/Value at all other Resets
‘1’ = Bit is set	‘0’ = Bit is cleared	

bit 7-4 **Unimplemented:** Read as ‘0’

bit 3-0 **NCO1ACC[19:16]:** NCO1 Accumulator, Upper Byte

Note 1: The accumulator spans registers NCO1ACCU:NCO1ACCH: NCO1ACCL. The 24 bits are reserved but not all are used.This register updates in real-time, asynchronously to the CPU; there is no provision to guarantee atomic access to this 24-bit space using an 8-bit bus. Writing to this register while the module is operating will produce undefined results.

REGISTER 22-6: NCO1INCL: NCO1 INCREMENT REGISTER – LOW BYTE(1,2)

R/W-0/0	R/W-0/0	R/W-0/0	R/W-0/0	R/W-0/0	R/W-0/0	R/W-0/0	R/W-1/1
NCO1INC[7:0]							
bit 7							bit 0

Legend:		
R = Readable bit	W = Writable bit	U = Unimplemented bit, read as ‘0’
u = Bit is unchanged	x = Bit is unknown	-n/n = Value at POR and BOR/Value at all other Resets
‘1’ = Bit is set	‘0’ = Bit is cleared	

bit 7-0 **NCO1INC[7:0]:** NCO1 Increment, Low Byte

Note 1: The logical increment spans NCO1INCU:NCO1INCH:NCO1INCL.

2: DDSINC is double-buffered as INCBUF; INCBUF is updated on the next falling edge of NCOCLK after writing to NCO1INCL; NCO1INCU and NCO1INCH must be written prior to writing NCO1INCL.

REGISTER 22-7: NCO1INCH: NCO1 INCREMENT REGISTER – HIGH BYTE(1)

R/W-0/0	R/W-0/0	R/W-0/0	R/W-0/0	R/W-0/0	R/W-0/0	R/W-0/0	R/W-0/0
NCO1INC[15:8]							
bit 7							bit 0

Legend:		
R = Readable bit	W = Writable bit	U = Unimplemented bit, read as ‘0’
u = Bit is unchanged	x = Bit is unknown	-n/n = Value at POR and BOR/Value at all other Resets
‘1’ = Bit is set	‘0’ = Bit is cleared	

bit 7-0 **NCO1INC[15:8]:** NCO1 Increment, High Byte

Note 1: The logical increment spans NCO1INCU:NCO1INCH:NCO1INCL.

REGISTER 22-8: NCO1INCU: NCO1 INCREMENT REGISTER – UPPER BYTE(1)

U-0	U-0	U-0	U-0	R/W-0/0	R/W-0/0	R/W-0/0	R/W-0/0
—	—	—	—	NCO1INC[19:16]			
bit 7							bit 0

Legend:		
R = Readable bit	W = Writable bit	U = Unimplemented bit, read as ‘0’
u = Bit is unchanged	x = Bit is unknown	-n/n = Value at POR and BOR/Value at all other Resets
‘1’ = Bit is set	‘0’ = Bit is cleared	

bit 7-4 **Unimplemented:** Read as ‘0’

bit 3-0 **NCO1INC[19:16]:** NCO1 Increment, Upper Byte

Note 1: The logical increment spans NCO1INCU:NCO1INCH:NCO1INCL.

TABLE 22-1: SUMMARY OF REGISTERS ASSOCIATED WITH NCO

Name	Bit 7	Bit 6	Bit 5	Bit 4	Bit 3	Bit 2	Bit 1	Bit 0	Register on Page
INTCON	GIE	PEIE	—	—	—	—	—	INTEDG	125
PIR7	—	—	NVMIF	NCO1IF	—	—	—	CWG1IF	141
PIE7	—	—	NVMIE	NCO1IE	—	—	—	CWG1IE	133
NCO1CON	N1EN	—	N1OUT	N1POL	—	—	—	N1PFM	250
NCO1CLK	N1PWS[2:0]			—	N1CKS[3:0]				251
NCO1ACCL	NCO1ACC[7:0]								252
NCO1ACCH	NCO1ACC[15:8]								252
NCO1ACCU	—	—	—	—	NCO1ACC[19:16]				252
NCO1INCL	NCO1INC[7:0]								253
NCO1INCH	NCO1INC[15:8]								253
NCO1INCU	—	—	—	—	NCO1AINC[19:16]				253
RxyPPS	—	—	—	RxyPPS[4:0]					201

Legend: — = unimplemented read as '0'. Shaded cells are not used for NCO module.

23.0 COMPARATOR MODULE

Comparators are used to interface analog circuits to a digital circuit by comparing two analog voltages and providing a digital indication of their relative magnitudes. Comparators are very useful mixed signal building blocks because they provide analog functionality independent of program execution. The analog comparator module includes the following features:

- Programmable input selection
- Selectable voltage reference
- Programmable output polarity
- Rising/falling output edge interrupts
- CWG1 Auto-shutdown source

23.1 Comparator Overview

A single comparator is shown in Figure 23-1 along with the relationship between the analog input levels and the digital output. When the analog voltage at VIN+ is less than the analog voltage at VIN-, the output of the comparator is a digital low level. When the analog voltage at VIN+ is greater than the analog voltage at VIN-, the output of the comparator is a digital high level.

The comparators available are shown in Table 23-1.

TABLE 23-1: AVAILABLE COMPARATORS

Device	C1	C2
PIC16(L)F15324/44	●	●

FIGURE 23-1: SINGLE COMPARATOR

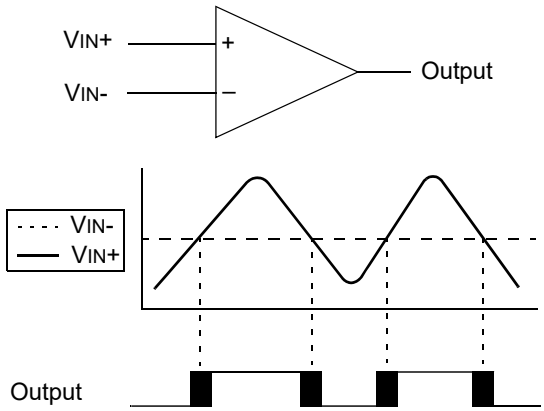

Note: The black areas of the output of the comparator represents the uncertainty due to input offsets and response time.

FIGURE 23-2: COMPARATOR MODULE SIMPLIFIED BLOCK DIAGRAM

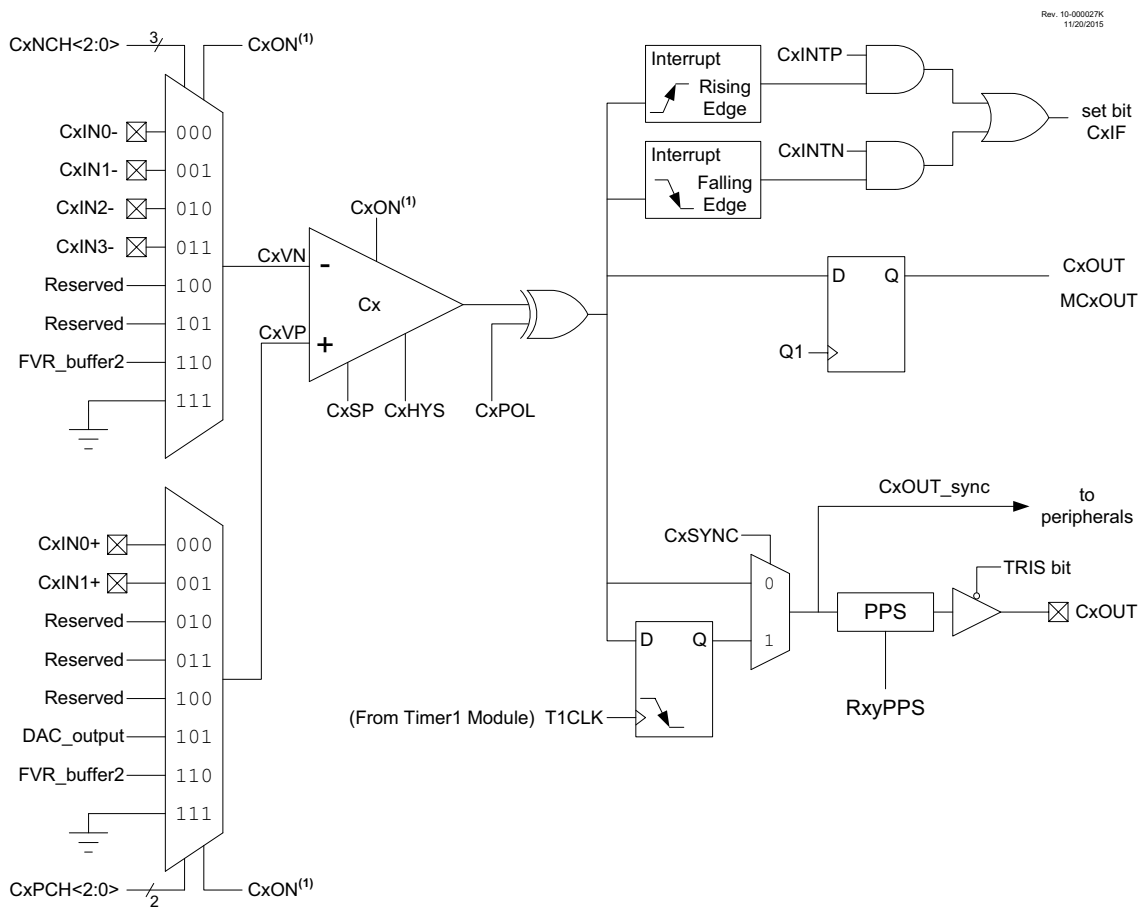

Note 1: When CxON = 0, all multiplexer inputs are disconnected and the Comparator will produce a '0' at the output.

23.2 Comparator Control

Each comparator has two control registers: CMxCON0 and CMxCON1.

The CMxCON0 register (see Register 23-1) contains Control and Status bits for the following:

- Enable
- Output
- Output polarity
- Hysteresis enable
- Timer1 output synchronization

The CMxCON1 register (see Register 23-2) contains Control bits for the following:

- Interrupt on positive/negative edge enables
- The CMxNCH and CMxPCH (Register 23-3 and Register 23-4) contain control bits for the following:
  - Positive input channel selection
  - Negative input channel selection

23.2.1 COMPARATOR ENABLE

Setting the CxON bit of the CMxCON0 register enables the comparator for operation. Clearing the CxON bit disables the comparator resulting in minimum current consumption.

23.2.2 COMPARATOR OUTPUT

The output of the comparator can be monitored by reading either the CxOUT bit of the CMxCON0 register or the MCxOUT bit of the CMOUT register.

The comparator output can also be routed to an external pin through the RxyPPS register (Register 15-2). The corresponding TRIS bit must be clear to enable the pin as an output.

Note 1: The internal output of the comparator is latched with each instruction cycle. Unless otherwise specified, external outputs are not latched.

23.2.3 COMPARATOR OUTPUT POLARITY

Inverting the output of the comparator is functionally equivalent to swapping the comparator inputs. The polarity of the comparator output can be inverted by setting the CxPOL bit of the CMxCON0 register. Clearing the CxPOL bit results in a noninverted output.

Table 23-2 shows the output state versus input conditions, including polarity control.

TABLE 23-2: COMPARATOR OUTPUT STATE VS. INPUT CONDITIONS

Input Condition	CxPOL	CxOUT
CxVN > CxVP	0	0
CxVN < CxVP	0	1
CxVN > CxVP	1	1
CxVN < CxVP	1	0

23.3 Comparator Hysteresis

A selectable amount of separation voltage can be added to the input pins of each comparator to provide a hysteresis function to the overall operation. Hysteresis is enabled by setting the CxHYS bit of the CMxCON0 register.

See Comparator Specifications in Table 37-14 for more information.

23.4 Timer1 Gate Operation

The output resulting from a comparator operation can be used as a source for gate control of Timer1. See **Section 26.5 "Timer Gate"** for more information. This feature is useful for timing the duration or interval of an analog event.

It is recommended that the comparator output be synchronized to Timer1. This ensures that Timer1 does not increment while a change in the comparator is occurring.

23.4.1 COMPARATOR OUTPUT SYNCHRONIZATION

The output from a comparator can be synchronized with Timer1 by setting the CxSYNC bit of the CMxCON0 register.

Once enabled, the comparator output is latched on the falling edge of the Timer1 source clock. If a prescaler is used with Timer1, the comparator output is latched after the prescaling function. To prevent a race condition, the comparator output is latched on the falling edge of the Timer1 clock source and Timer1 increments on the rising edge of its clock source. See the Comparator Block Diagram (Figure 23-2) and the Timer1 Block Diagram (Figure 26-1) for more information.

23.5 Comparator Interrupt

An interrupt can be generated upon a change in the output value of the comparator for each comparator, a rising edge detector and a falling edge detector are present.

When either edge detector is triggered and its associated enable bit is set (CxINTP and/or CxINTN bits of the CMxCON1 register), the Corresponding Interrupt Flag bit (CxIF bit of the PIR2 register) will be set.

To enable the interrupt, the user must set the following bits:

- CxON, CxPOL and CxSP bits of the CMxCON0 register
- CxIE bit of the PIE2 register
- CxINTP bit of the CMxCON1 register (for a rising edge detection)
- CxINTN bit of the CMxCON1 register (for a falling edge detection)
- PEIE and GIE bits of the INTCON register

The associated interrupt flag bit, CxIF bit of the PIR2 register, must be cleared in software. If another edge is detected while this flag is being cleared, the flag will still be set at the end of the sequence.

Note:	Although a comparator is disabled, an interrupt can be generated by changing the output polarity with the CxPOL bit of the CMxCON0 register, or by switching the comparator on or off with the CxON bit of the CMxCON0 register.

23.6 Comparator Positive Input Selection

Configuring the CxPCH[2:0] bits of the CMxPCH register directs an internal voltage reference or an analog pin to the noninverting input of the comparator:

- CxIN0+ analog pin
- DAC output
- FVR (Fixed Voltage Reference)
- VSS (Ground)

See **Section 18.0 "Fixed Voltage Reference (FVR)"** for more information on the Fixed Voltage Reference module.

See **Section 21.0 "5-Bit Digital-to-Analog Converter (DAC1) Module"** for more information on the DAC input signal.

Any time the comparator is disabled (CxON = 0), all comparator inputs are disabled.

23.7 Comparator Negative Input Selection

The CxNCH[2:0] bits of the CMxCON1 register direct an analog input pin and internal reference voltage or analog ground to the inverting input of the comparator:

- CxIN- pin
- FVR (Fixed Voltage Reference)
- Analog Ground

Note:	To use CxINy+ and CxINy- pins as analog input, the appropriate bits must be set in the ANSEL register and the corresponding TRIS bits must also be set to disable the output drivers.

23.8 Comparator Response Time

The comparator output is indeterminate for a period of time after the change of an input source or the selection of a new reference voltage. This period is referred to as the response time. The response time of the comparator differs from the settling time of the voltage reference. Therefore, both of these times must be considered when determining the total response time to a comparator input change. See the Comparator and Voltage Reference Specifications in Table 37-14 for more details.

23.9 Analog Input Connection Considerations

A simplified circuit for an analog input is shown in Figure 23-3. Since the analog input pins share their connection with a digital input, they have reverse biased ESD protection diodes to VDD and VSS. The analog input, therefore, must be between VSS and VDD. If the input voltage deviates from this range by more than 0.6V in either direction, one of the diodes is forward biased and a latch-up may occur.

A maximum source impedance of 10 kΩ is recommended for the analog sources. Also, any external component connected to an analog input pin, such as a capacitor or a Zener diode, must have very little leakage current to minimize inaccuracies introduced.

Note 1: When reading a PORT register, all pins configured as analog inputs will read as a '0'. Pins configured as digital inputs will convert as an analog input, according to the input specification.

2: Analog levels on any pin defined as a digital input, may cause the input buffer to consume more current than is specified.

FIGURE 23-3: ANALOG INPUT MODEL

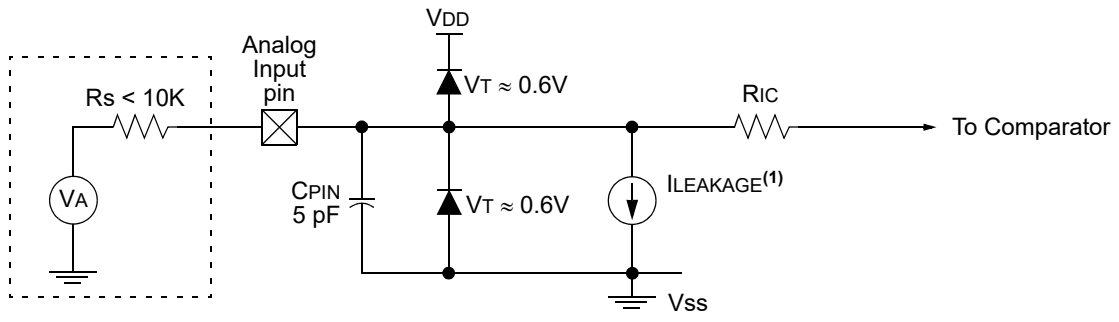

Legend: CPIN = Input Capacitance
ILEAKAGE = Leakage Current at the pin due to various junctions
RIC = Interconnect Resistance
RS = Source Impedance
VA = Analog Voltage
VT = Threshold Voltage

Note 1: See I/O Ports in Table 37-4.

23.10 CWG1 Auto-shutdown Source

The output of the comparator module can be used as an auto-shutdown source for the CWG1 module. When the output of the comparator is active and the corresponding ASxE is enabled, the CWG operation will be suspended immediately (see **Section 30.10 "Auto-Shutdown"**).

23.11 Operation in Sleep Mode

The comparator module can operate during Sleep. The comparator clock source is based on the Timer1 clock source. If the Timer1 clock source is either the system clock (FOSC) or the instruction clock (FOSC/4), Timer1 will not operate during Sleep, and synchronized comparator outputs will not operate.

A comparator interrupt will wake the device from Sleep. The CxIE bits of the PIE2 register must be set to enable comparator interrupts.

23.12 Register Definitions: Comparator Control

REGISTER 23-1: CMxCON0: COMPARATOR Cx CONTROL REGISTER 0

R/W-0/0	R-0/0	U-0	R/W-0/0	U-0	U-0	R/W-0/0	R/W-0/0
ON	OUT	—	POL	—	—	HYS	SYNC
bit 7							bit 0

Legend:		
R = Readable bit	W = Writable bit	U = Unimplemented bit, read as ‘0’
u = Bit is unchanged	x = Bit is unknown	-n/n = Value at POR and BOR/Value at all other Resets
‘1’ = Bit is set	‘0’ = Bit is cleared	

bit 7 **ON:** Comparator Enable bit
1 = Comparator is enabled
0 = Comparator is disabled and consumes no active power

bit 6 **OUT:** Comparator Output bit
If CxPOL = 1 (inverted polarity):
1 = CxVP < CxVN
0 = CxVP > CxVN
If CxPOL = 0 (noninverted polarity):
1 = CxVP > CxVN
0 = CxVP < CxVN

bit 5 **Unimplemented:** Read as ‘0’

bit 4 **POL:** Comparator Output Polarity Select bit
1 = Comparator output is inverted
0 = Comparator output is not inverted

bit 3-2 **Unimplemented:** Read as ‘0’

bit 1 **HYS:** Comparator Hysteresis Enable bit
1 = Comparator hysteresis enabled
0 = Comparator hysteresis disabled

bit 0 **SYNC:** Comparator Output Synchronous Mode bit
1 = Comparator output to Timer1 and I/O pin is synchronous to changes on Timer1 clock source. Output updated on the falling edge of Timer1 clock source.
0 = Comparator output to Timer1 and I/O pin is asynchronous

REGISTER 23-2: CMxCON1: COMPARATOR Cx CONTROL REGISTER 1

U-0	U-0	U-0	U-0	U-0	U-0	R/W-0/0	R/W-0/0
—	—	—	—	—	—	INTP	INTN
bit 7							bit 0

Legend:		
R = Readable bit	W = Writable bit	U = Unimplemented bit, read as ‘0’
u = Bit is unchanged	x = Bit is unknown	-n/n = Value at POR and BOR/Value at all other Resets
‘1’ = Bit is set	‘0’ = Bit is cleared	

bit 7-2 **Unimplemented:** Read as ‘0’

bit 1 **INTP:** Comparator Interrupt on Positive-Going Edge Enable bits
1 = The CxIF interrupt flag will be set upon a positive-going edge of the CxOUT bit
0 = No interrupt flag will be set on a positive-going edge of the CxOUT bit

bit 0 **INTN:** Comparator Interrupt on Negative-Going Edge Enable bits
1 = The CxIF interrupt flag will be set upon a negative-going edge of the CxOUT bit
0 = No interrupt flag will be set on a negative-going edge of the CxOUT bit

REGISTER 23-3: CMXNCH: COMPARATOR Cx NEGATIVE INPUT SELECT REGISTER

U-0	U-0	U-0	U-0	U-0	R/W-0/0	R/W-0/0	R/W-0/0
—	—	—	—	—	NCH[2:0]		
bit 7							bit 0

Legend:		
R = Readable bit	W = Writable bit	U = Unimplemented bit, read as ‘0’
u = Bit is unchanged	x = Bit is unknown	-n/n = Value at POR and BOR/Value at all other Resets
‘1’ = Bit is set	‘0’ = Bit is cleared	

bit 7-3 **Unimplemented:** Read as ‘0’

bit 2-0 **NCH[2:0]:** Comparator Negative Input Channel Select bits
111 = CxVN connects to AVSS
110 = CxVN connects to FVR Buffer 2
101 = CxVN unconnected
100 = CxVN unconnected
011 = CxVN connects to CxIN3- pin
010 = CxVN connects to CxIN2- pin
001 = CxVN connects to CxIN1- pin
000 = CxVN connects to CxIN0- pin

REGISTER 23-4: CMXPCH: COMPARATOR Cx POSITIVE INPUT SELECT REGISTER

U-0	U-0	U-0	U-0	U-0	R/W-0/0	R/W-0/0	R/W-0/0
—	—	—	—	—	PCH[2:0]		
bit 7							bit 0

Legend:		
R = Readable bit	W = Writable bit	U = Unimplemented bit, read as ‘0’
u = Bit is unchanged	x = Bit is unknown	-n/n = Value at POR and BOR/Value at all other Resets
‘1’ = Bit is set	‘0’ = Bit is cleared	

bit 7-3 **Unimplemented:** Read as ‘0’

bit 2-0 **PCH[2:0]:** Comparator Positive Input Channel Select bits
111 = CxVP connects to AVSS
110 = CxVP connects to FVR Buffer 2
101 = CxVP connects to DAC output
100 = CxVP unconnected
011 = CxVP unconnected
010 = CxVP unconnected
001 = CxVP connects to CxIN1+ pin
000 = CxVP connects to CxIN0+ pin

REGISTER 23-5: CMOUT: COMPARATOR OUTPUT REGISTER

U-0	U-0	U-0	U-0	U-0	U-0	R-0/0	R-0/0
—	—	—	—	—	—	MC2OUT	MC1OUT
bit 7							bit 0

Legend:		
R = Readable bit	W = Writable bit	U = Unimplemented bit, read as ‘0’
u = Bit is unchanged	x = Bit is unknown	-n/n = Value at POR and BOR/Value at all other Resets
‘1’ = Bit is set	‘0’ = Bit is cleared	

bit 7-2 **Unimplemented:** Read as ‘0’

bit 1 **MC2OUT:** Mirror Copy of C2OUT bit

bit 0 **MC1OUT:** Mirror Copy of C1OUT bit

TABLE 23-3: SUMMARY OF REGISTERS ASSOCIATED WITH COMPARATOR MODULE

Name	Bit 7	Bit 6	Bit 5	Bit 4	Bit 3	Bit 2	Bit 1	Bit 0	Register on Page
CMxCON0	ON	OUT	—	POL	—	—	HYS	SYNC	261
CMxCON1	—	—	—	—	—	—	INTP	INTN	262
CMOUT	—	—	—	—	—	—	MC2OUT	MC1OUT	264
FVRCON	FVREN	FVRRDY	TSEN	TSRNG	CDAFVR[1:0]		ADFVR[1:0]		222
DAC1CON0	DAC1EN	—	DAC1OE1	DAC1OE2	DAC1PSS[1:0]		—	DAC1NSS	243
DAC1CON1	—	—	—	DAC1R[4:0]					243
INTCON	GIE	PEIE	—					INTEDG	125
PIE2	—	ZCDIE	—	—	—	—	C2IE	C1IE	128
PIR2	—	ZCDIF	—	—	—	—	C2IF	C1IF	136
RxyPPS	—	—	—	RxyPPS[4:0]					201
CLCINxPPS	—	—	CLCIN0PPS[5:0]						200
T1GPPS	—	—	T1GPPS[5:0]						200

Legend: — = unimplemented location, read as ‘0’. Shaded cells are unused by the comparator module.

24.0 ZERO-CROSS DETECTION (ZCD) MODULE

The ZCD module detects when an A/C signal crosses through the ground potential. The actual zero crossing threshold is the zero crossing reference voltage, VCPINV, which is typically 0.75V above ground.

The connection to the signal to be detected is through a series current limiting resistor. The module applies a current source or sink to the ZCD pin to maintain a constant voltage on the pin, thereby preventing the pin voltage from forward biasing the ESD protection diodes. When the applied voltage is greater than the reference voltage, the module sinks current. When the applied voltage is less than the reference voltage, the module sources current. The current source and sink action keeps the pin voltage constant over the full range of the applied voltage. The ZCD module is shown in the simplified block diagram Figure 24-2.

The ZCD module is useful when monitoring an A/C waveform for, but not limited to, the following purposes:

- A/C period measurement
- Accurate long term time measurement
- Dimmer phase delayed drive
- Low EMI cycle switching

24.1 External Resistor Selection

The ZCD module requires a current limiting resistor in series with the external voltage source. The impedance and rating of this resistor depends on the external source peak voltage. Select a resistor value that will drop all of the peak voltage when the current through the resistor is nominally 300 µA. Refer to Equation 24-1 and Figure 24-1. Make sure that the ZCD I/O pin internal weak pull-up is disabled so it does not interfere with the current source and sink.

EQUATION 24-1: EXTERNAL RESISTOR

$$R_{SERIES} = \frac{V_{PEAK}}{3 \times 10^{-4}}$$

FIGURE 24-1: EXTERNAL VOLTAGE

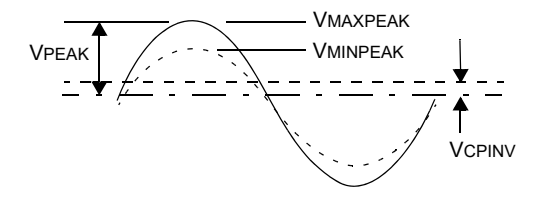

FIGURE 24-2: SIMPLIFIED ZCD BLOCK DIAGRAM

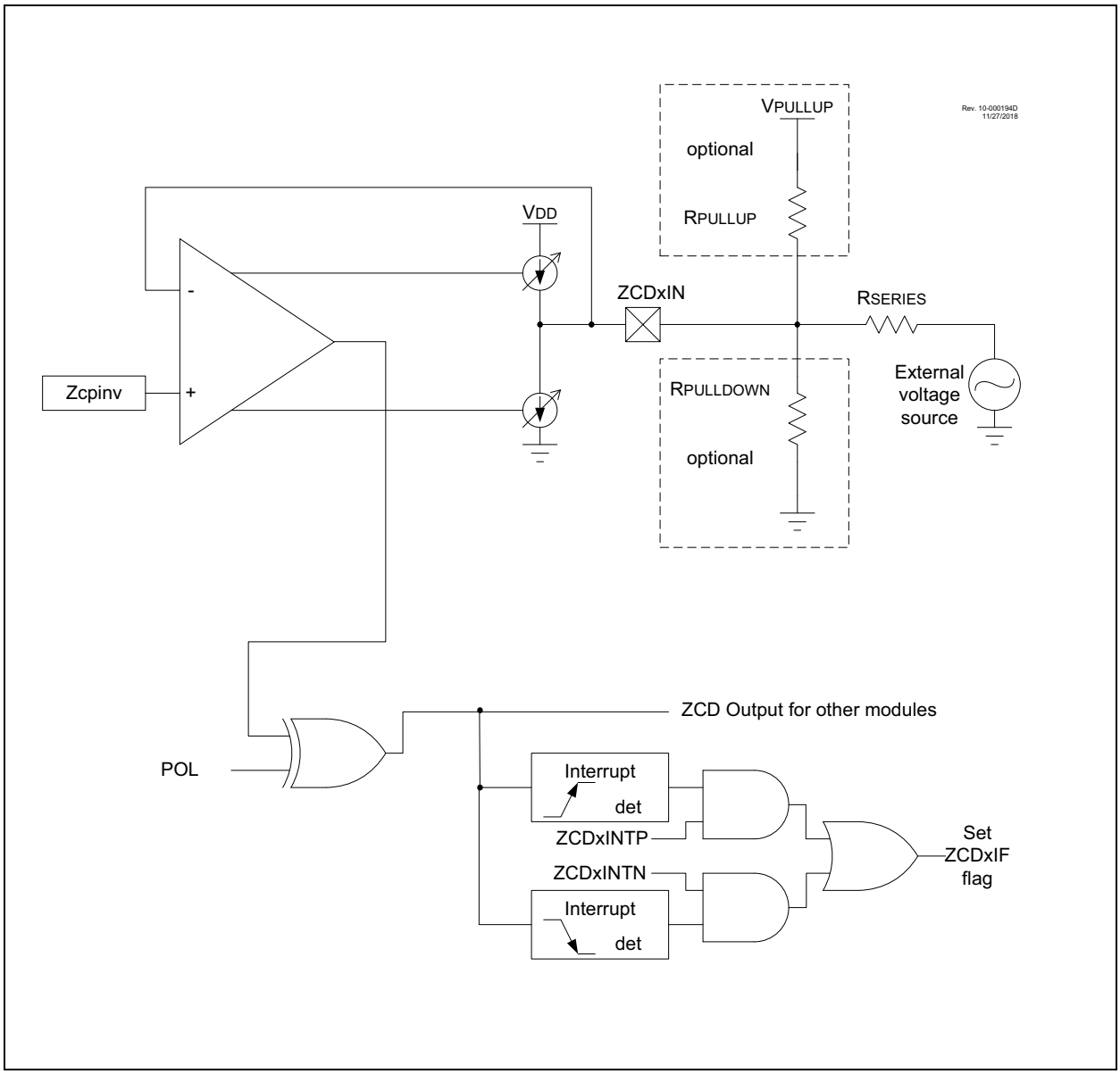

24.2 ZCD Logic Output

The ZCD module includes a Status bit, which can be read to determine whether the current source or sink is active. The OUT bit of the ZCDxCON register is set when the current sink is active, and cleared when the current source is active. The OUT bit is affected by the polarity even if the module is disabled.

24.3 ZCD Logic Polarity

The POL bit of the ZCDxCON register inverts the ZCDxOUT bit relative to the current source and sink output. When the POL bit is set, a OUT high indicates that the current source is active, and a low output indicates that the current sink is active.

The POL bit affects the ZCD interrupts. See **Section 24.4 "ZCD Interrupts"**.

24.4 ZCD Interrupts

An interrupt will be generated upon a change in the ZCD logic output when the appropriate interrupt enables are set. A rising edge detector and a falling edge detector are present in the ZCD for this purpose.

The ZCDIF bit of the PIR2 register will be set when either edge detector is triggered and its associated enable bit is set. The INTP enables rising edge interrupts and the INTN bit enables falling edge interrupts. Both are located in the ZCDxCON register.

To fully enable the interrupt, the following bits must be set:

- ZCDIE bit of the PIE2 register
- INTP bit of the ZCDxCON register (for a rising edge detection)
- INTN bit of the ZCDxCON register (for a falling edge detection)
- PEIE and GIE bits of the INTCON register

Changing the POL bit can cause an interrupt, regardless of the level of the EN bit.

The ZCDIF bit of the PIR2 register must be cleared in software as part of the interrupt service. If another edge is detected while this flag is being cleared, the flag will still be set at the end of the sequence.

24.5 Correcting for VCPINV offset

The actual voltage at which the ZCD switches is the reference voltage at the noninverting input of the ZCD op amp. For external voltage source waveforms other than square waves, this voltage offset from zero causes the zero-cross event to occur either too early or too late.

24.5.1 CORRECTION BY AC COUPLING

When the external voltage source is sinusoidal then the effects of the VCPINV offset can be eliminated by isolating the external voltage source from the ZCD pin with a capacitor in addition to the voltage reducing resistor. The capacitor will cause a phase shift resulting in the ZCD output switch in advance of the actual zero crossing event. The phase shift will be the same for both rising and falling zero crossings, which can be compensated for by either delaying the CPU response to the ZCD switch by a timer or other means, or selecting a capacitor value large enough that the phase shift is negligible.

To determine the series resistor and capacitor values for this configuration, start by computing the impedance, Z, to obtain a peak current of 300 µA. Next, arbitrarily select a suitably large non-polar capacitor and compute its reactance, Xc, at the external voltage source frequency. Finally, compute the series resistor, capacitor peak voltage, and phase shift by the formulas shown in Equation 24-2.

EQUATION 24-2: R-C CALCULATIONS

V_{PEAK} = external voltage source peak voltage

f = external voltage source frequency

C = series capacitor

R = series resistor

V_C = Peak capacitor voltage

Φ = Capacitor induced zero crossing phase advance in radians

T_Φ = Time ZC event occurs before actual zero crossing

$Z = V_{PEAK}/3x10^{-4}$

$Xc = 1/(2\Pi fC)$

$R = \sqrt{(Z^2 - Xc^2)}$

$V_C = Xc(3x10^{-4})$

$\Phi = Tan^{-1}(Xc/R)$

$T_\Phi = \Phi/(2\Pi f)$

EXAMPLE 24-1:

V_{RMS} = 120

$V_{PEAK} = V_{RMS} * \sqrt{2} = 169.7$

f = 60 Hz

C = 0.1 µF

$Z = V_{PEAK}/3x10^{-4} = 169.7/(3x10^{-4}) = 565.7\ k\Omega$

$Xc = 1/(2\Pi fC) = 1/(2\Pi*60*1*10^{-7}) = 26.53\ k\Omega$

$R = \sqrt{(Z^2 - Xc^2)} = 565.1\ k\Omega$ (computed)

R = 560 kΩ (used)

$Z_R = \sqrt{(R^2 + Xc^2)} = 560.6\ k\Omega$ (using actual resistor)

$I_{PEAK} = V_{PEAK}/ Z_R = 302.7*10^{-6}$

$V_C = Xc * I_{PEAK} = 8.0\ V$

$\Phi = Tan^{-1}(Xc/R) = 0.047$ radians

$T_\Phi = \Phi/(2\Pi f) = 125.6$ us

24.5.2 CORRECTION BY OFFSET CURRENT

When the waveform is varying relative to V_{SS}, then the zero cross is detected too early as the waveform falls and too late as the waveform rises. When the waveform is varying relative to V_{DD}, then the zero cross is detected too late as the waveform rises and too early as the waveform falls. The actual offset time can be determined for sinusoidal waveforms with the corresponding equations shown in Equation 24-3.

EQUATION 24-3: ZCD EVENT OFFSET

When External Voltage Source is relative to Vss:

$$T_{OFFSET} = \frac{\operatorname{asin}\left(\frac{Vcpinv}{V_{PEAK}}\right)}{2\pi \bullet Freq}$$

When External Voltage Source is relative to V_{DD}:

$$T_{OFFSET} = \frac{\operatorname{asin}\left(\frac{V_{DD} - Vcpinv}{V_{PEAK}}\right)}{2\pi \bullet Freq}$$

This offset time can be compensated for by adding a pull-up or pull-down biasing resistor to the ZCD pin. A pull-up resistor is used when the external voltage source is varying relative to V_{SS}. A pull-down resistor is used when the voltage is varying relative to V_{DD}. The resistor adds a bias to the ZCD pin so that the target external voltage source must go to zero to pull the pin voltage to the V_{CPINV} switching voltage. The pull-up or pull-down value can be determined with the equation shown in Equation 24-4.

EQUATION 24-4: ZCD PULL-UP/DOWN

When External Signal is relative to Vss:

$$R_{PULLUP} = \frac{R_{SERIES}(V_{PULLUP} - Vcpinv)}{Vcpinv}$$

When External Signal is relative to V_{DD}:

$$\left(R_{PULLDOWN} = \frac{R_{SERIES} \times (Vcpinv)}{(V_{DD} - Vcpinv)}\right)$$

24.6 Handling V_{PEAK} variations

If the peak amplitude of the external voltage is expected to vary, the series resistor must be selected to keep the ZCD current source and sink below the design maximum range of ± 600 µA and above a reasonable minimum range. A general rule of thumb is that the maximum peak voltage can be no more than six times the minimum peak voltage. To ensure that the maximum current does not exceed ± 600 µA and the minimum is at least ± 100 µA, compute the series resistance as shown in Equation 24-5. The compensating pull-up for this series resistance can be determined with Equation 24-4 because the pull-up value is not dependent from the peak voltage.

EQUATION 24-5: SERIES R FOR V RANGE

$$R_{SERIES} = \frac{V_{MAXPEAK} + V_{MINPEAK}}{7 \times 10^{-4}}$$

24.7 Operation During Sleep

The ZCD current sources and interrupts are unaffected by Sleep.

24.8 Effects of a Reset

The ZCD circuit can be configured to default to the active or inactive state on Power-on-Reset (POR). When the ZCDDIS Configuration bit is cleared, the ZCD circuit will be active at POR. When the $\overline{\text{ZCD}}$ Configuration bit is set, the EN bit of the ZCDxCON register must be set to enable the ZCD module.

24.9 Register Definitions: ZCD Control

REGISTER 24-1: ZCDCON: ZERO-CROSS DETECTION CONTROL REGISTER

R/W-q/q	U-0	R-x/x	R/W-0/0	U-0	U-0	R/W-0/0	R/W-0/0
SEN	—	OUT	POL	—	—	INTP	INTN
bit 7							bit 0

Legend:		
R = Readable bit	W = Writable bit	U = Unimplemented bit, read as ‘0’
u = Bit is unchanged	x = Bit is unknown	-n/n = Value at POR and BOR/Value at all other Resets
‘1’ = Bit is set	‘0’ = Bit is cleared	q = value depends on Configuration bits

bit 7 **SEN**: Zero-Cross Detection Enable bit
1 = Zero-Cross Detect is enabled. ZCD pin is forced to output to source and sink current.
0 = Zero-Cross Detect is disabled. ZCD pin operates according to PPS and TRIS controls.

bit 6 **Unimplemented:** Read as ‘0’

bit 5 **OUT:** Zero-Cross Detection Logic Level bit
POL bit = 1**:**
1 = ZCD pin is sourcing current
0 = ZCD pin is sinking current
POL bit = 0**:**
1 = ZCD pin is sinking current
0 = ZCD pin is sourcing current

bit 4 **POL:** Zero-Cross Detection Logic Output Polarity bit
1 = ZCD logic output is inverted
0 = ZCD logic output is not inverted

bit 3-2 **Unimplemented:** Read as ‘0’

bit 1 **INTP:** Zero-Cross Positive Edge Interrupt Enable bit
1 = ZCDIF bit is set on low-to-high ZCDx_output transition
0 = ZCDIF bit is unaffected by low-to-high ZCDx_output transition

bit 0 **INTN:** Zero-Cross Negative Edge Interrupt Enable bit
1 = ZCDIF bit is set on high-to-low ZCDx_output transition
0 = ZCDIF bit is unaffected by high-to-low ZCDx_output transition

TABLE 24-1: SUMMARY OF REGISTERS ASSOCIATED WITH THE ZCD MODULE

Name	Bit 7	Bit 6	Bit 5	Bit 4	Bit 3	Bit 2	Bit 1	Bit 0	Register on page
PIE3	RC2IE	TX2IE	RC1IE	TX1IE	—	—	BCL1IE	SSP1IE	129
PIR3	RC2IF	TX2IF	RC1IF	TX1IF	—	—	BCL1IF	SSP1IF	137
ZCDxCON	EN	—	OUT	POL	—	—	INTP	INTN	270

Legend: — = unimplemented, read as ‘0’. Shaded cells are unused by the ZCD module.

TABLE 24-2: SUMMARY OF CONFIGURATION WORD WITH THE ZCD MODULE

Name	Bits	Bit -/7	Bit -/6	Bit 13/5	Bit 12/4	Bit 11/3	Bit 10/2	Bit 9/1	Bit 8/0	Register on Page
CONFIG2	13:8	—	—	$\overline{\text{DEBUG}}$	STVREN	PPS1WAY	ZCDDIS	BORV	—	81
	7:0	BOREN [1:0]		$\overline{\text{LPBOREN}}$	—	—	—	$\overline{\text{PWRTE}}$	MCLRE	

Legend: — = unimplemented location, read as ‘0’. Shaded cells are not used by the ZCD module.

25.0 TIMER0 MODULE

The Timer0 module is an 8/16-bit timer/counter with the following features:

- 16-bit timer/counter
- 8-bit timer/counter with programmable period
- Synchronous or asynchronous operation
- Selectable clock sources
- Programmable prescaler (independent of Watchdog Timer)
- Programmable postscaler
- Operation during Sleep mode
- Interrupt on match or overflow
- Output on I/O pin (via PPS) or to other peripherals

25.1 Timer0 Operation

Timer0 can operate as either an 8-bit timer/counter or a 16-bit timer/counter. The mode is selected with the T016BIT bit of the T0CON register.

25.1.1 16-BIT MODE

In normal operation, TMR0 increments on the rising edge of the clock source. A 15-bit prescaler on the clock input gives several prescale options (see prescaler control bits, T0CKPS[3:0] in the T0CON1 register).

25.1.1.1 Timer0 Reads and Writes in 16-Bit Mode

TMR0H is not the actual high byte of Timer0 in 16-bit mode. It is actually a buffered version of the real high byte of Timer0, which is neither directly readable nor writable (see Figure 25-1). TMR0H is updated with the contents of the high byte of Timer0 during a read of TMR0L. This provides the ability to read all 16 bits of Timer0 without having to verify that the read of the high and low byte was valid, due to a rollover between successive reads of the high and low byte.

Similarly, a write to the high byte of Timer0 must also take place through the TMR0H Buffer register. The high byte is updated with the contents of TMR0H when a write occurs to TMR0L. This allows all 16 bits of Timer0 to be updated at once.

25.1.2 8-BIT MODE

In normal operation, TMR0 increments on the rising edge of the clock source. A 15-bit prescaler on the clock input gives several prescale options (see prescaler control bits, T0CKPS[3:0] in the T0CON1 register).

The value of TMR0L is compared to that of the Period buffer, a copy of TMR0H, on each clock cycle. When the two values match, the following events happen:

- TMR0_out goes high for one prescaled clock period
- TMR0L is reset
- The contents of TMR0H are copied to the period buffer

In 8-bit mode, the TMR0L and TMR0H registers are both directly readable and writable. The TMR0L register is cleared on any device Reset, while the TMR0H register initializes at FFh.

Both the prescaler and postscaler counters are cleared on the following events:

- A write to the TMR0L register
- A write to either the T0CON0 or T0CON1 registers
- Any device Reset – Power-on Reset (POR), MCLR Reset, Watchdog Timer Reset (WDTR) or
- Brown-out Reset (BOR)

25.1.3 COUNTER MODE

In Counter mode, the prescaler is normally disabled by setting the T0CKPS bits of the T0CON1 register to ‘0000’. Each rising edge of the clock input (or the output of the prescaler if the prescaler is used) increments the counter by ‘1’.

25.1.4 TIMER MODE

In Timer mode, the Timer0 module will increment every instruction cycle as long as there is a valid clock signal and the T0CKPS bits of the T0CON1 register (Register 25-2) are set to ‘0000’. When a prescaler is added, the timer will increment at the rate based on the prescaler value.

25.1.5 ASYNCHRONOUS MODE

When the T0ASYNC bit of the T0CON1 register is set (T0ASYNC = ‘1’), the counter increments with each rising edge of the input source (or output of the prescaler, if used). Asynchronous mode allows the counter to continue operation during Sleep mode provided that the clock also continues to operate during Sleep.

25.1.6 SYNCHRONOUS MODE

When the T0ASYNC bit of the T0CON1 register is clear (T0ASYNC = 0), the counter clock is synchronized to the system oscillator (FOSC/4). When operating in Synchronous mode, the counter clock frequency cannot exceed FOSC/4.

25.2 Clock Source Selection

The T0CS[2:0] bits of the T0CON1 register are used to select the clock source for Timer0. Register 25-2 displays the clock source selections.

25.2.1 INTERNAL CLOCK SOURCE

When the internal clock source is selected, Timer0 operates as a timer and will increment on multiples of the clock source, as determined by the Timer0 prescaler.

25.2.2 EXTERNAL CLOCK SOURCE

When an external clock source is selected, Timer0 can operate as either a timer or a counter. Timer0 will increment on multiples of the rising edge of the external clock source, as determined by the Timer0 prescaler.

25.3 Programmable Prescaler

A software programmable prescaler is available for exclusive use with Timer0. There are 16 prescaler options for Timer0 ranging in powers of two from 1:1 to 1:32768. The prescaler values are selected using the T0CKPS[3:0] bits of the T0CON1 register.

The prescaler is not directly readable or writable. Clearing the prescaler register can be done by writing to the TMR0L register or the T0CON1 register.

25.4 Programmable Postscaler

A software programmable postscaler (output divider) is available for exclusive use with Timer0. There are 16 postscaler options for Timer0 ranging from 1:1 to 1:16. The postscaler values are selected using the T0OUTPS[3:0] bits of the T0CON0 register.

The postscaler is not directly readable or writable. Clearing the postscaler register can be done by writing to the TMR0L register or the T0CON0 register.

25.5 Operation during Sleep

When operating synchronously, Timer0 will halt. When operating asynchronously, Timer0 will continue to increment and wake the device from Sleep (if Timer0 interrupts are enabled) provided that the input clock source is active.

25.6 Timer0 Interrupts

The Timer0 interrupt flag (TMR0IF) bit is set when either of the following conditions occur:

- 8-bit TMR0L matches the TMR0H value
- 16-bit TMR0 rolls over from ‘FFFFh’

When the postscaler bits (T0OUTPS[3:0]) are set to 1:1 operation (no division), the T0IF flag bit will be set with every TMR0 match or rollover. In general, the TMR0IF flag bit will be set every T0OUTPS +1 matches or roll-overs.

If Timer0 interrupts are enabled (the TMR0IE bit of the PIE0 register = `1`), the CPU will be interrupted and the device may wake from Sleep (see **Section 25.2 “Clock Source Selection”** for more details).

25.7 Timer0 Output

The Timer0 output can be routed to any I/O pin via the RxyPPS output selection register (see **Section 15.0 “Peripheral Pin Select (PPS) Module”** for additional information). The Timer0 output can also be used by other peripherals, such as the Auto-conversion Trigger of the Analog-to-Digital Converter. Finally, the Timer0 output can be monitored through software via the Timer0 Output (T0OUT) bit of the T0CON0 register (Register 25-1).

TMR0_out will be one postscaled clock period when a match occurs between TMR0L and TMR0H in 8-bit mode, or when TMR0 rolls over in 16-bit mode. The Timer0 output is a 50% duty cycle that toggles on each TMR0_out rising clock edge.

FIGURE 25-1: BLOCK DIAGRAM OF TIMER0

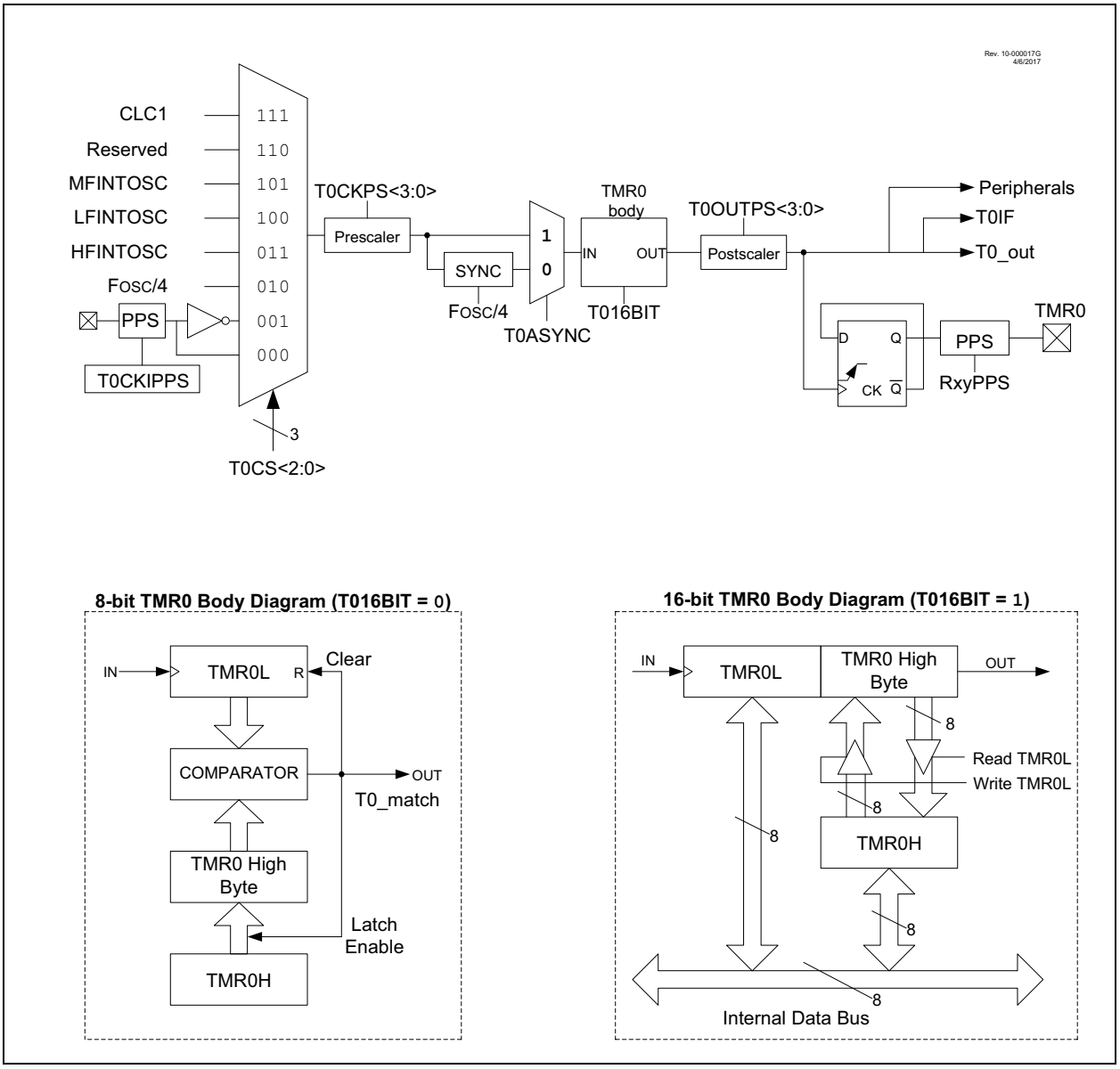

REGISTER 25-1: T0CON0: TIMER0 CONTROL REGISTER 0

R/W-0/0	U-0	R-0	R/W-0/0	R/W-0/0	R/W-0/0	R/W-0/0	R/W-0/0
T0EN	—	T0OUT	T016BIT	T0OUTPS[3:0]			
bit 7							bit 0

Legend:		
R = Readable bit	W = Writable bit	U = Unimplemented bit, read as ‘0’
u = Bit is unchanged	x = Bit is unknown	-n/n = Value at POR and BOR/Value at all other Resets
‘1’ = Bit is set	‘0’ = Bit is cleared	

bit 7 **T0EN:** Timer0 Enable bit
`1` = The module is enabled and operating
`0` = The module is disabled and in the lowest Power mode

bit 6 **Unimplemented:** Read as ‘`0`’

bit 5 **T0OUT:** Timer0 Output bit (read-only)
Timer0 output bit

bit 4 **T016BIT:** Timer0 Operating as 16-bit Timer Select bit
`1` = Timer0 is a 16-bit timer
`0` = Timer0 is an 8-bit timer

bit 3-0 **T0OUTPS[3:0]:** Timer0 output postscaler (divider) select bits
`1111` = 1:16 Postscaler
`1110` = 1:15 Postscaler
`1101` = 1:14 Postscaler
`1100` = 1:13 Postscaler
`1011` = 1:12 Postscaler
`1010` = 1:11 Postscaler
`1001` = 1:10 Postscaler
`1000` = 1:9 Postscaler
`0111` = 1:8 Postscaler
`0110` = 1:7 Postscaler
`0101` = 1:6 Postscaler
`0100` = 1:5 Postscaler
`0011` = 1:4 Postscaler
`0010` = 1:3 Postscaler
`0001` = 1:2 Postscaler
`0000` = 1:1 Postscaler

REGISTER 25-2: T0CON1: TIMER0 CONTROL REGISTER 1

R/W-0/0	R/W-0/0	R/W-0/0	R/W-0/0	R/W-0/0	R/W-0/0	R/W-0/0	R/W-0/0
T0CS[2:0]			T0ASYNC	T0CKPS[3:0]			
bit 7							bit 0

Legend:		
R = Readable bit	W = Writable bit	U = Unimplemented bit, read as ‘0’
u = Bit is unchanged	x = Bit is unknown	-n/n = Value at POR and BOR/Value at all other Resets
‘1’ = Bit is set	‘0’ = Bit is cleared	

bit 7-5 **T0CS[2:0]:** Timer0 Clock Source select bits
`111` = LC1_out
`110` = Reserved
`101` = MFINTOSC (500 kHz)
`100` = LFINTOSC
`011` = HFINTOSC
`010` = FOSC/4
`001` = T0CKIPPS (Inverted)
`000` = T0CKIPPS (True)

bit 4 **T0ASYNC:** TMR0 Input Asynchronization Enable bit
`1` = The input to the TMR0 counter is not synchronized to system clocks
`0` = The input to the TMR0 counter is synchronized to FOSC/4

bit 3-0 **T0CKPS[3:0]:** Prescaler Rate Select bit
`1111` = 1:32768
`1110` = 1:16384
`1101` = 1:8192
`1100` = 1:4096
`1011` = 1:2048
`1010` = 1:1024
`1001` = 1:512
`1000` = 1:256
`0111` = 1:128
`0110` = 1:64
`0101` = 1:32
`0100` = 1:16
`0011` = 1:8
`0010` = 1:4
`0001` = 1:2
`0000` = 1:1

TABLE 25-1: SUMMARY OF REGISTERS ASSOCIATED WITH TIMER0

Name	Bit 7	Bit 6	Bit 5	Bit 4	Bit 3	Bit 2	Bit 1	Bit 0	Register on Page
TMR0L	Holding Register for the Least Significant Byte of the 16-bit TMR0 Register								271*
TMR0H	Holding Register for the Most Significant Byte of the 16-bit TMR0 Register								271*
T0CON0	T0EN	—	T0OUT	T016BIT	T0OUTPS[3:0]				274
T0CON1	T0CS[2:0]			T0ASYNC	T0CKPS[3:0]				275
T0CKIPPS	—	—	T0CKIPPS[5:0]						200
TMR0PPS	—	—	TMR0PPS[5:0]						200
T1GCON	GE	GPOL	GTM	GSPM	GGO/$\overline{\text{DONE}}$	GVAL	—	—	286
INTCON	GIE	PEIE	—	—	—	—	—	INTEDG	125
PIR0	—	—	TMR0IF	IOCIF	—	—	—	INTF	134
PIE0	—	—	TMR0IE	IOCIE	—	—	—	INTE	126

Legend: — = Unimplemented location, read as '0'. Shaded cells are not used by the Timer0 module.
* Page with Register information.

26.0 TIMER1 MODULE WITH GATE CONTROL

The Timer1 module is 16-bit timer/counters with the following features:

- 16-bit timer/counter register pair (TMR1H:TMR1L)
- Programmable internal or external clock source
- 2-bit prescaler
- Clock source for optional comparator synchronization
- Multiple Timer1 gate (count enable) sources
- Interrupt on overflow
- Wake-up on overflow (external clock, Asynchronous mode only)
- Time base for the Capture/Compare function
- Auto-conversion Trigger (with CCP)
- Selectable Gate Source Polarity
- Gate Toggle mode
- Gate Single-Pulse mode
- Gate Value Status
- Gate Event Interrupt

Figure 26-1 is a block diagram of the Timer1 module.

This device has one instance of Timer1 type modules.

FIGURE 26-1: TIMER1 BLOCK DIAGRAM

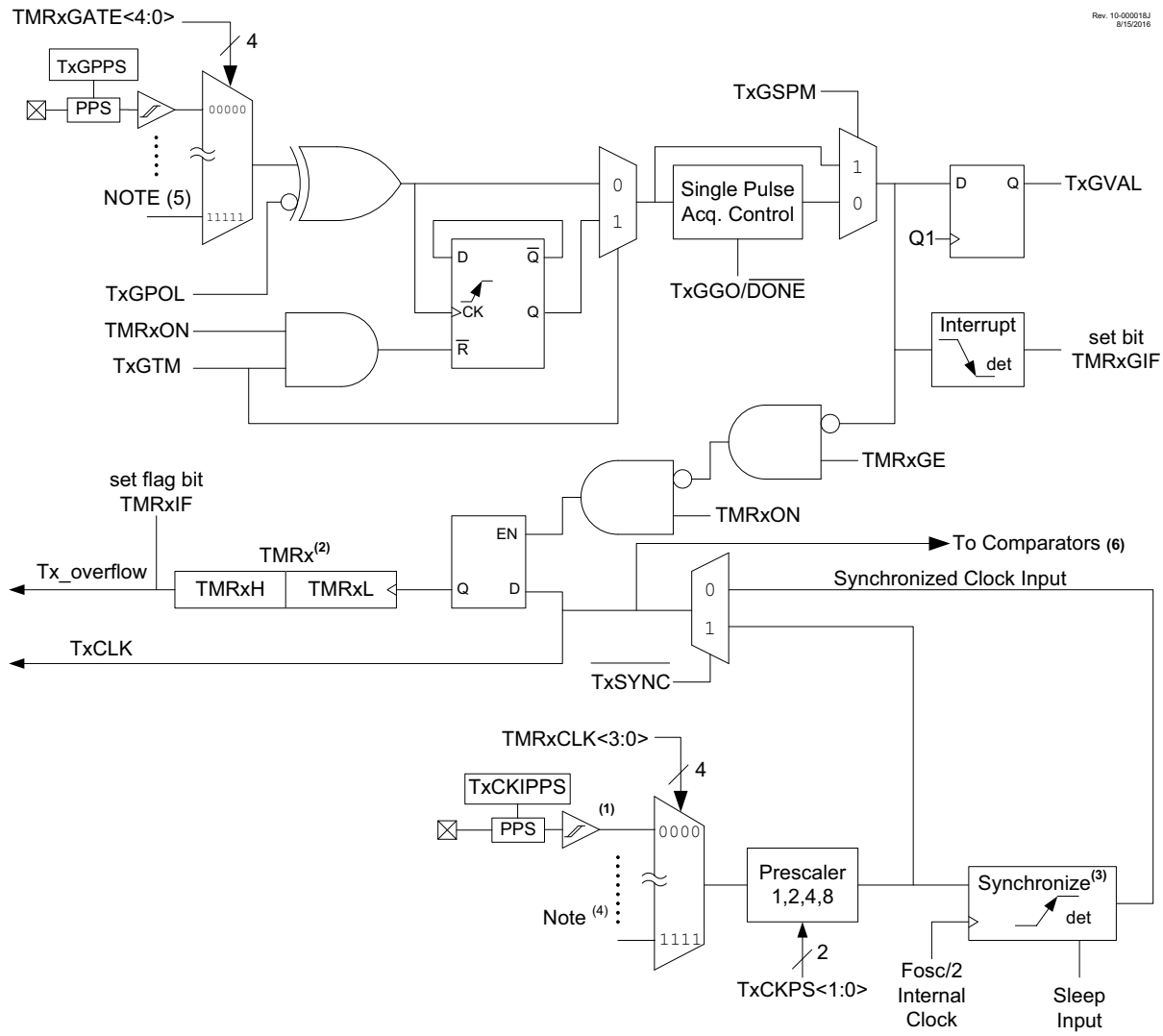

Note 1: ST Buffer is high speed type when using TxCKIPPS.

2: TMRx register increments on rising edge.

3: Synchronize does not operate while in Sleep.

4: See Register 26-3 for Clock source selections.

5: See Register 26-4 for GATE source selections.

6: Synchronized comparator output must not be used in conjunction with synchronized input clock.

26.1 Timer1 Operation

The Timer1 modules are 16-bit incrementing counters which are accessed through the TMR1H:TMR1L register pairs. Writes to TMR1H or TMR1L directly update the counter.

When used with an internal clock source, the module is a timer and increments on every instruction cycle. When used with an external clock source, the module can be used as either a timer or counter and increments on every selected edge of the external source.

The timer is enabled by configuring the TMR1ON and GE bits in the T1CON and T1GCON registers, respectively. Table 26-1 displays the Timer1 enable selections.

TABLE 26-1: TIMER1 ENABLE SELECTIONS

TMR1ON	TMR1GE	Timer1 Operation
1	1	Count Enabled
1	0	Always On
0	1	Off
0	0	Off

26.2 Clock Source Selection

The T1CLK register is used to select the clock source for the timer. Register 26-3 shows the possible clock sources that may be selected to make the timer increment.

26.2.1 INTERNAL CLOCK SOURCE

When the internal clock source FOSC is selected, the TMR1H:TMR1L register pair will increment on multiples of FOSC as determined by the respective Timer1 prescaler.

When the FOSC internal clock source is selected, the timer register value will increment by four counts every instruction clock cycle. Due to this condition, a 2 LSB error in resolution will occur when reading the TMR1H:TMR1L value. To utilize the full resolution of the timer in this mode, an asynchronous input signal must be used to gate the timer clock input.

Out of the total timer gate signal sources, the following subset of sources can be asynchronous and may be useful for this purpose:

- CLC4 output
- CLC3 output
- CLC2 output
- CLC1 output
- Zero-Cross Detect output
- Comparator2 output
- Comparator1 output
- TxG PPS remappable input pin

26.2.2 EXTERNAL CLOCK SOURCE

When the timer is enabled and the external clock input source (ex: T1CKI PPS remappable input) is selected as the clock source, the timer will increment on the rising edge of the external clock input.

When using an external clock source, the timer can be configured to run synchronously or asynchronously, as described in **Section 26.4 "Timer Operation in Asynchronous Counter Mode"**.

Note: In Counter mode, a falling edge must be registered by the counter prior to the first incrementing rising edge after any one or more of the following conditions:

- The timer is first enabled after POR
- Firmware writes to TMR1H or TMR1L
- The timer is disabled
- The timer is re-enabled (e.g., TMR1ON-->1) when the T1CKI signal is currently logic low.

26.3 Timer Prescaler

Timer1 has four prescaler options allowing 1, 2, 4 or 8 divisions of the clock input. The CKPS bits of the T1CON register control the prescale counter. The prescale counter is not directly readable or writable; however, the prescaler counter is cleared upon a write to TMR1H or TMR1L.

26.4 Timer Operation in Asynchronous Counter Mode

If the control bit $\overline{\text{SYNC}}$ of the T1CON register is set, the external clock input is not synchronized. The timer increments asynchronously to the internal phase clocks. If the external clock source is selected then the timer will continue to run during Sleep and can generate an interrupt on overflow, which will wake-up the processor. However, special precautions in software are needed to read/write the timer (see **Section 26.4.1 "Reading and Writing Timer1 in Asynchronous Counter Mode"**).

Note:	When switching from synchronous to asynchronous operation, it is possible to skip an increment. When switching from asynchronous to synchronous operation, it is possible to produce an additional increment.

26.4.1 READING AND WRITING TIMER1 IN ASYNCHRONOUS COUNTER MODE

Reading TMR1H or TMR1L while the timer is running from an external asynchronous clock will ensure a valid read (taken care of in hardware). However, the user has to keep in mind that reading the 16-bit timer in two 8-bit values itself, poses certain problems, since the timer may overflow between the reads.

For writes, it is recommended that the user simply stop the timer and write the desired values. A write contention may occur by writing to the timer registers, while the register is incrementing. This may produce an unpredictable value in the TMR1H:TMR1L register pair.

26.5 Timer Gate

Timer1 can be configured to count freely or the count can be enabled and disabled using the time gate circuitry. This is also referred to as Timer Gate Enable.

The timer gate can also be driven by multiple selectable sources.

26.5.1 TIMER GATE ENABLE

The Timer Gate Enable mode is enabled by setting the GE bit of the T1GCON register. The polarity of the Timer Gate Enable mode is configured using the GPOL bit of the T1GCON register.

When Timer Gate Enable signal is enabled, the timer will increment on the rising edge of the Timer1 clock source. When Timer Gate Enable signal is disabled, the timer always increments, regardless of the GE bit. See Figure 26-3 for timing details.

TABLE 26-2: TIMER GATE ENABLE SELECTIONS

T1CLK	T1GPOL	T1G	Timer Operation
↑	1	1	Counts
↑	1	0	Holds Count
↑	0	1	Holds Count
↑	0	0	Counts

26.5.2 TIMER GATE SOURCE SELECTION

One of the several different external or internal signal sources may be chosen to gate the timer and allow the timer to increment. The gate input signal source can be selected based on the T1GATE register setting. See the T1GATE register (Register 26-4) description for a complete list of the available gate sources. The polarity for each available source is also selectable. Polarity selection is controlled by the GPOL bit of the T1GCON register.

26.5.2.1 T1G Pin Gate Operation

The T1G pin is one source for the timer gate control. It can be used to supply an external source to the time gate circuitry.

26.5.2.2 Timer0 Overflow Gate Operation

When Timer0 overflows, or a period register match condition occurs (in 8-bit mode), a low-to-high pulse will automatically be generated and internally supplied to the Timer1 gate circuitry.

26.5.2.3 Comparator C1 Gate Operation

The output resulting from a Comparator 1 operation can be selected as a source for the timer gate control. The Comparator 1 output can be synchronized to the timer clock or left asynchronous. For more information see **Section 23.4.1 "Comparator Output Synchronization"**.

26.5.2.4 Comparator C2 Gate Operation

The output resulting from a Comparator 2 operation can be selected as a source for the timer gate control. The Comparator 2 output can be synchronized to the timer clock or left asynchronous. For more information see **Section 23.4.1 "Comparator Output Synchronization"**.

26.5.3 TIMER1 GATE TOGGLE MODE

When Timer1 Gate Toggle mode is enabled, it is possible to measure the full-cycle length of a timer gate signal, as opposed to the duration of a single level pulse.

The timer gate source is routed through a flip-flop that changes state on every incrementing edge of the signal. See Figure 26-4 for timing details.

Timer1 Gate Toggle mode is enabled by setting the GTM bit of the T1GCON register. When the GTM bit is cleared, the flip-flop is cleared and held clear. This is necessary to control which edge is measured.

Note:	Enabling Toggle mode at the same time as changing the gate polarity may result in indeterminate operation.

26.5.4 TIMER1 GATE SINGLE-PULSE MODE

When Timer1 Gate Single-Pulse mode is enabled, it is possible to capture a single-pulse gate event. Timer1 Gate Single-Pulse mode is first enabled by setting the GSPM bit in the T1GCON register. Next, the GGO/$\overline{\text{DONE}}$ bit in the T1GCON register must be set. The timer will be fully enabled on the next incrementing edge. On the next trailing edge of the pulse, the GGO/$\overline{\text{DONE}}$ bit will automatically be cleared. No other gate events will be allowed to increment the timer until the GGO/$\overline{\text{DONE}}$ bit is once again set in software. See Figure 26-5 for timing details.

If the Single-Pulse Gate mode is disabled by clearing the GSPM bit in the T1GCON register, the GGO/$\overline{\text{DONE}}$ bit must also be cleared.

Enabling the Toggle mode and the Single-Pulse mode simultaneously will permit both sections to work together. This allows the cycle times on the timer gate source to be measured. See Figure 26-6 for timing details.

26.5.5 TIMER1 GATE VALUE STATUS

When Timer1 Gate Value Status is utilized, it is possible to read the most current level of the gate control value. The value is stored in the GVAL bit in the T1GCON register. The GVAL bit is valid even when the timer gate is not enabled (GE bit is cleared).

26.5.6 TIMER1 GATE EVENT INTERRUPT

When Timer1 Gate Event Interrupt is enabled, it is possible to generate an interrupt upon the completion of a gate event. When the falling edge of GVAL occurs, the TMR1GIF flag bit in the PIR5 register will be set. If the TMR1GIE bit in the PIE5 register is set, then an interrupt will be recognized.

The TMR1GIF flag bit operates even when the timer gate is not enabled (TMR1GE bit is cleared).

26.6 Timer1 Interrupts

The timer register pair (TMR1H:TMR1L) increments to FFFFh and rolls over to 0000h. When the timer rolls over, the respective timer interrupt flag bit of the PIR5 register is set. To enable the interrupt on rollover, the user must set these bits:

- ON bit of the T1CON register
- TMR1IE bit of the PIE4 register
- PEIE bit of the INTCON register
- GIE bit of the INTCON register

The interrupt is cleared by clearing the TMR1IF bit in the Interrupt Service Routine.

Note:	To avoid immediate interrupt vectoring, the TMR1H:TMR1L register pair must be preloaded with a value that is not imminently about to rollover, and the TMR1IF flag must be cleared prior to enabling the timer interrupts.

26.7 Timer1 Operation During Sleep

Timer1 can only operate during Sleep when setup in Asynchronous Counter mode. In this mode, an external crystal or clock source can be used to increment the counter. To set up the timer to wake the device:

- ON bit of the T1CON register must be set
- TMR1IE bit of the PIE4 register must be set
- PEIE bit of the INTCON register must be set
- $\overline{\text{SYNC}}$ bit of the T1CON register must be set
- CS bits of the T1CLK register must be configured
- The timer clock source must be enabled and continue operation during Sleep.

The device will wake-up on an overflow and execute the next instructions. If the GIE bit of the INTCON register is set, the device will call the Interrupt Service Routine.

Secondary oscillator will continue to operate in Sleep regardless of the $\overline{\text{SYNC}}$ bit setting.

26.8 CCP Capture/Compare Time Base

The CCP modules use the TMR1H:TMR1L register pair as the time base when operating in Capture or Compare mode.

In Capture mode, the value in the TMR1H:TMR1L register pair is copied into the CCPRxH:CCPRxL register pair on a configured event.

In Compare mode, an event is triggered when the value CCPRxH:CCPRxL register pair matches the value in the TMR1H:TMR1L register pair. This event can be an Auto-conversion Trigger.

For more information, see **Section 28.0 “Capture/Compare/PWM Modules”**.

26.9 CCP Auto-Conversion Trigger

When any of the CCP’s are configured to trigger an auto-conversion, the trigger will clear the TMR1H:TMR1L register pair. This auto-conversion does not cause a timer interrupt. The CCP module may still be configured to generate a CCP interrupt.

In this mode of operation, the CCPRxH:CCPRxL register pair becomes the period register for Timer1.

The timer must be synchronized and FOSC/4 must be selected as the clock source to utilize the Auto-conversion Trigger. Asynchronous operation of the timer can cause an Auto-conversion Trigger to be missed.

In the event that a write to TMR1H or TMR1L coincides with an Auto-conversion Trigger from the CCP, the write will take precedence.

For more information, see **Section 28.2.4 “Compare During Sleep”**.

FIGURE 26-2: TIMER1 INCREMENTING EDGE

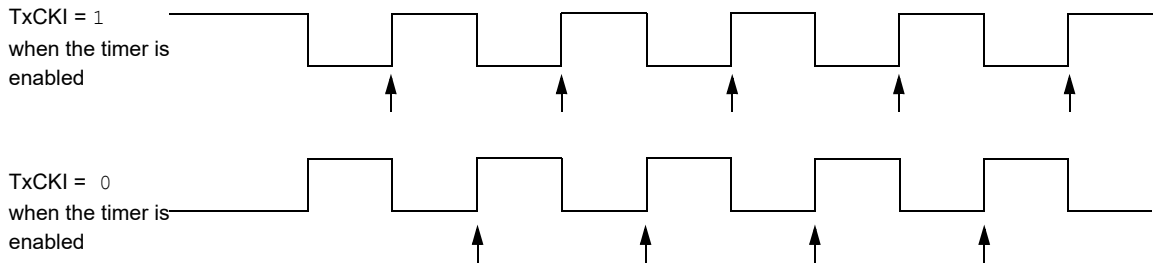

Note 1: Arrows indicate counter increments.

2: In Counter mode, a falling edge must be registered by the counter prior to the first incrementing rising edge of the clock.

FIGURE 26-3: TIMER1 GATE ENABLE MODE

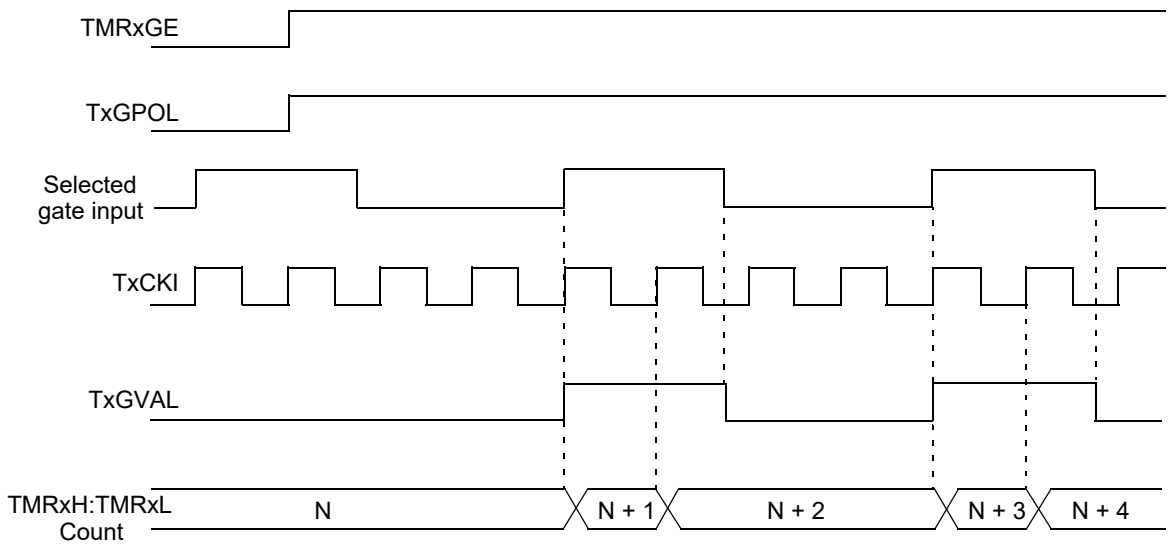

FIGURE 26-4: TIMER1 GATE TOGGLE MODE

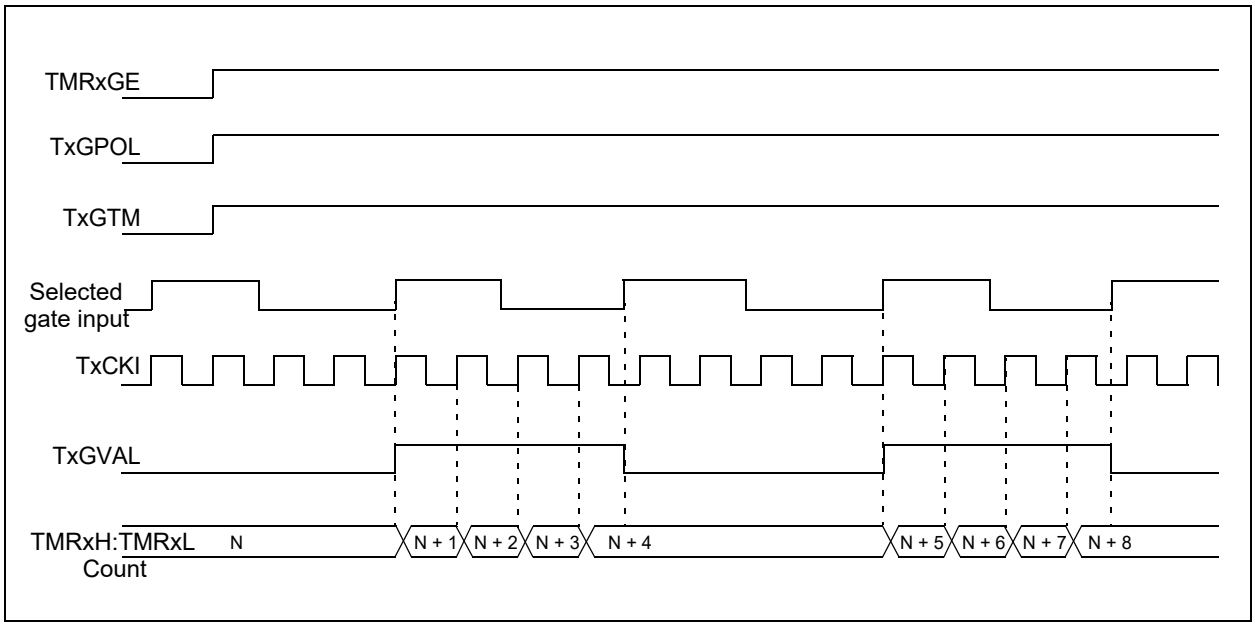

FIGURE 26-5: TIMER1 GATE SINGLE-PULSE MODE

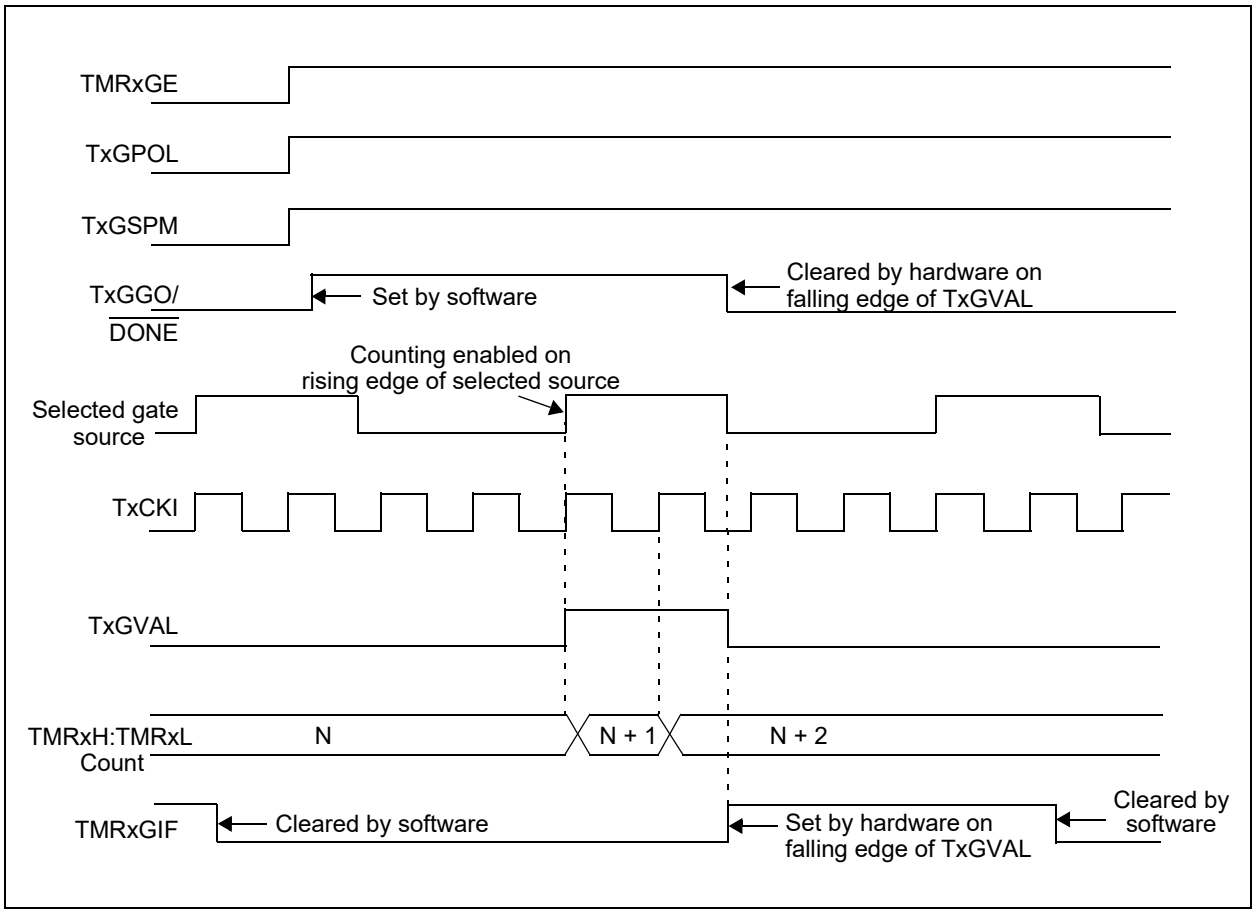

FIGURE 26-6: TIMER1 GATE SINGLE-PULSE AND TOGGLE COMBINED MODE

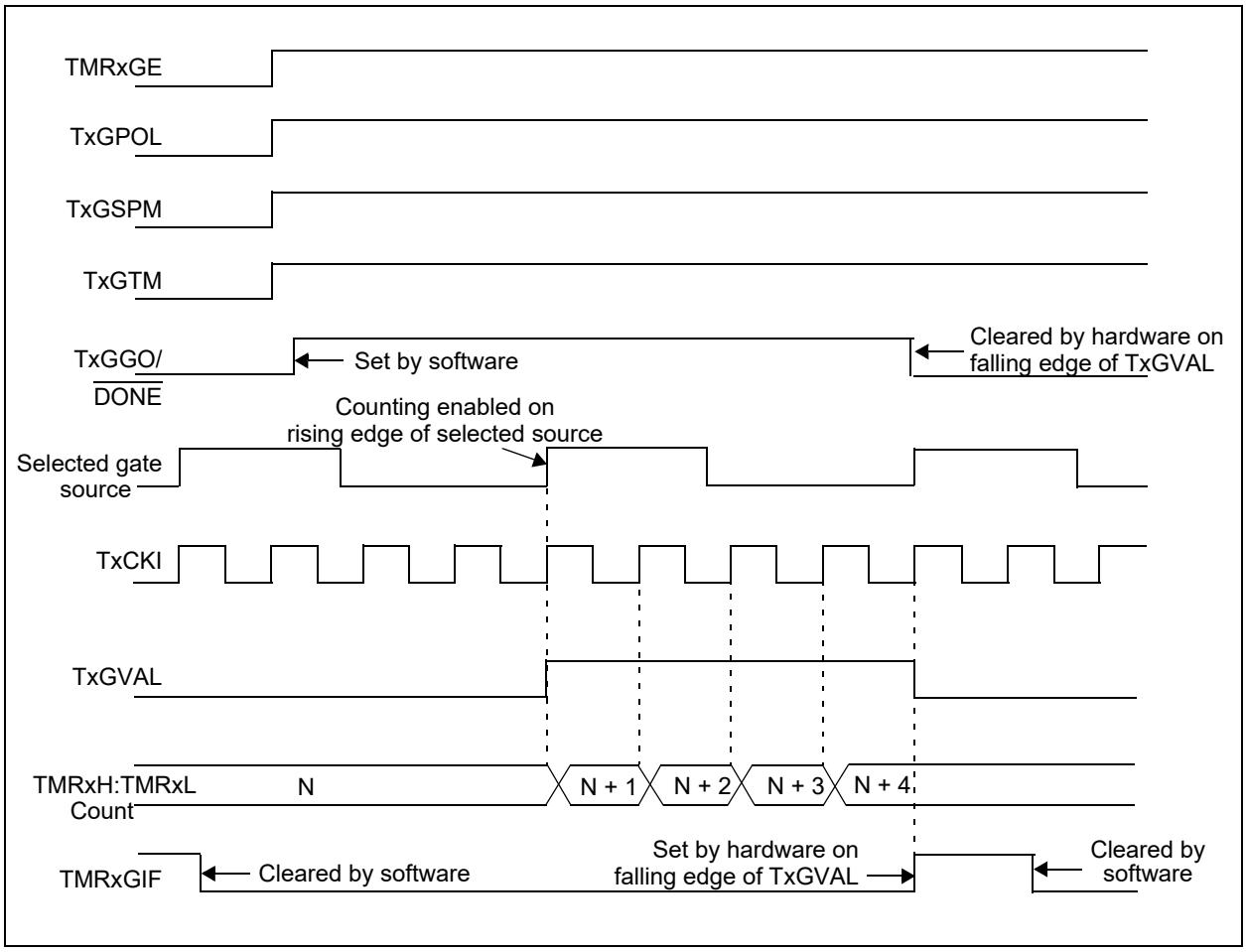

26.10 Register Definitions: Timer1 Control

REGISTER 26-1: T1CON: TIMER1 CONTROL REGISTER

U-0	U-0	R/W-0/u	R/W-0/u	U-0	R/W-0/u	R/W-0/u	R/W-0/u
—	—	CKPS[1:0]		—	$\overline{\text{SYNC}}$	RD16	ON
bit 7							bit 0

Legend:		
R = Readable bit	W = Writable bit	U = Unimplemented bit, read as ‘0’
u = Bit is unchanged	x = Bit is unknown	-n/n = Value at POR and BOR/Value at all other Resets
‘1’ = Bit is set	‘0’ = Bit is cleared	

bit 7-6 **Unimplemented:** Read as ‘0’

bit 5-4 **CKPS[1:0]:** Timer1 Input Clock Prescale Select bits
11 = 1:8 Prescale value
10 = 1:4 Prescale value
01 = 1:2 Prescale value
00 = 1:1 Prescale value

bit 3 **Unimplemented:** Read as ‘0’

bit 2 **SYNC:** Timer1 Synchronization Control bit
When TMR1CLK = FOSC or FOSC/4
This bit is ignored. The timer uses the internal clock and no additional synchronization is performed.
ELSE
0 = Synchronize external clock input with system clock
1 = Do not synchronize external clock input

bit 1 **RD16:** 16-bit Read/Write Mode Enable bit
0 = Enables register read/write of Timer1 in two 8-bit operation
1 = Enables register read/write of Timer1 in one 16-bit operation

bit 0 **ON:** Timer1 On bit
1 = Enables Timer1
0 = Stops Timer1 and clears Timer1 gate flip-flop

REGISTER 26-2: T1GCON: TIMER1 GATE CONTROL REGISTER

R/W-0/u	R/W-0/u	R/W-0/u	R/W-0/u	R/W/HC-0/u	R-x/x	U-0	U-0
GE	GPOL	GTM	GSPM	GGO/$\overline{\text{DONE}}$	GVAL	—	—
bit 7							bit 0

Legend:		
R = Readable bit	W = Writable bit	U = Unimplemented bit, read as ‘0’
u = Bit is unchanged	x = Bit is unknown	-n/n = Value at POR and BOR/Value at all other Resets
‘1’ = Bit is set	‘0’ = Bit is cleared	HC = Bit is cleared by hardware

bit 7 **GE:** Timer1 Gate Enable bit
If ON = 0:
This bit is ignored
If ON = 1:
1 = Timer1 counting is controlled by the Timer1 gate function
0 = Timer1 is always counting

bit 6 **GPOL:** Timer1 Gate Polarity bit
1 = Timer1 gate is active-high (Timer1 counts when gate is high)
0 = Timer1 gate is active-low (Timer1 counts when gate is low)

bit 5 **GTM:** Timer1 Gate Toggle Mode bit
1 = Timer1 Gate Toggle mode is enabled
0 = Timer1 Gate Toggle mode is disabled and toggle flip-flop is cleared
Timer1 gate flip-flop toggles on every rising edge

bit 4 **GSPM:** Timer1 Gate Single-Pulse Mode bit
1 = Timer1 Gate Single-Pulse mode is enabled
0 = Timer1 Gate Single-Pulse mode is disabled

bit 3 **GGO/$\overline{\text{DONE}}$:** Timer1 Gate Single-Pulse Acquisition Status bit
1 = Timer1 gate single-pulse acquisition is ready, waiting for an edge
0 = Timer1 gate single-pulse acquisition has completed or has not been started
This bit is automatically cleared when GSPM is cleared

bit 2 **GVAL:** Timer1 Gate Value Status bit
Indicates the current state of the Timer1 gate that can be provided to TMR1H:TMR1L
Unaffected by Timer1 Gate Enable (GE)

bit 1-0 **Unimplemented:** Read as ‘0’

REGISTER 26-3: T1CLK TIMER1 CLOCK SELECT REGISTER

U-0	U-0	U-0	U-0	R/W-0/u	R/W-0/u	R/W-0/u	R/W-0/u
—	—	—	—	CS[3:0]			
bit 7							bit 0

Legend:		
R = Readable bit	W = Writable bit	U = Unimplemented bit, read as ‘0’
u = Bit is unchanged	x = Bit is unknown	-n/n = Value at POR and BOR/Value at all other Resets
‘1’ = Bit is set	‘0’ = Bit is cleared	HC = Bit is cleared by hardware

bit 7-4 **Unimplemented:** Read as ‘0’

bit 3-0 **CS[3:0]:** Timer1 Clock Select bits
1111 = Reserved
1110 = Reserved
1101 = LC4_out
1100 = LC3_out
1011 = LC2_out
1010 = LC1_out
1001 = Timer0 overflow output
1000 = CLKR output
0111 = Reserved
0110 = MFINTOSC (32 kHz)
0101 = MFINTOSC (500 kHz)
0100 = LFINTOSC
0011 = HFINTOSC
0010 = FOSC
0001 = FOSC/4
0000 = T1CKIPPS

REGISTER 26-4: T1GATE TIMER1 GATE SELECT REGISTER

U-0	U-0	U-0	R/W-0/u	R/W-0/u	R/W-0/u	R/W-0/u	R/W-0/u
—	—	—	GSS[4:0]				
bit 7							bit 0

Legend:		
R = Readable bit	W = Writable bit	U = Unimplemented bit, read as ‘0’
u = Bit is unchanged	x = Bit is unknown	-n/n = Value at POR and BOR/Value at all other Resets
‘1’ = Bit is set	‘0’ = Bit is cleared	HC = Bit is cleared by hardware

bit 7-5 **Unimplemented:** Read as ‘0’

bit 4-0 **GSS[4:0]:** Timer1 Gate Select bits
11111-10001 = Reserved
10000 = LC4_out
01111 = LC3_out
01110 = LC2_out
01101 = LC1_out
00100 = ZCD1_output
01011 = C2OUT_sync
01010 = C1OUT_sync
01001 = NCO1_out
01000 = PWM6_out
00111 = PWM5_out
00110 = PWM4_out
00101 = PWM3_out
00100 = CCP2_out
00011 = CCP1_out
00010 = TMR2_postscaled
00001 = Timer0 overflow output
00000 = T1GPPS

TABLE 26-3: SUMMARY OF REGISTERS ASSOCIATED WITH TIMER1

Name	Bit 7	Bit 6	Bit 5	Bit 4	Bit 3	Bit 2	Bit 1	Bit 0	Register on Page
INTCON	GIE	PEIE	—	—	—	—	—	INTEDG	125
PIE4	—	—	—	—	—	—	TMR2IE	TMR1IE	130
PIR4	—	—	—	—	—	—	TMR2IF	TMR1IF	138
T1CON	—	—	CKPS[1:0]		—	$\overline{\text{SYNC}}$	RD16	ON	285
T1GCON	GE	GPOL	GTM	GSPM	GGO/$\overline{\text{DONE}}$	GVAL	—	—	286
T1GATE	—	—	—	GSS[4:0]					288
T1CLK	—	—	—	—	CS[3:0]				287
TMR1L	Holding Register for the Least Significant Byte of the 16-bit TMR1 Register								277*
TMR1H	Holding Register for the Most Significant Byte of the 16-bit TMR1 Register								277*
T1CKIPPS	—	—	T1CKIPPS[5:0]						200
T1GPPS	—	—	T1GPPS[5:0]						200
CCPxCON	CCPxEN	CCPxOE	CCPxOUT	CCPxFMT	CCPxMODE[3:0]				322
CLCxSELy	—	—	—	LCxDyS[4:0]					368
ADACT	—	—	—	—	ADACT[3:0]				236

Legend: — = Unimplemented location, read as '0'. Shaded cells are not used with the Timer1 modules.
* Page with register information.

27.0 TIMER2 MODULE WITH HARDWARE LIMIT TIMER (HLT)

The Timer2 module is an 8-bit timer that can operate as free-running period counters or in conjunction with external signals that control start, run, freeze, and Reset operation in One Shot and Monostable modes of operation. Sophisticated waveform control such as pulse density modulation are possible by combining the operation of this timer with other internal peripherals such as the comparators and CCP modules. Features of the timer include:

- 8-bit timer register
- 8-bit period register
- Selectable external hardware timer Resets
- Programmable prescaler (1:1 to 1:128)
- Programmable postscaler (1:1 to 1:16)
- Selectable synchronous/asynchronous operation
- Alternate clock sources
- Interrupt-on-period
- Three modes of operation:
  - Free Running Period
  - One Shot
  - Monostable

See Figure 27-1 for a block diagram of Timer2. See Figure 27-2 for the clock source block diagram.

FIGURE 27-1: TIMER2 BLOCK DIAGRAM

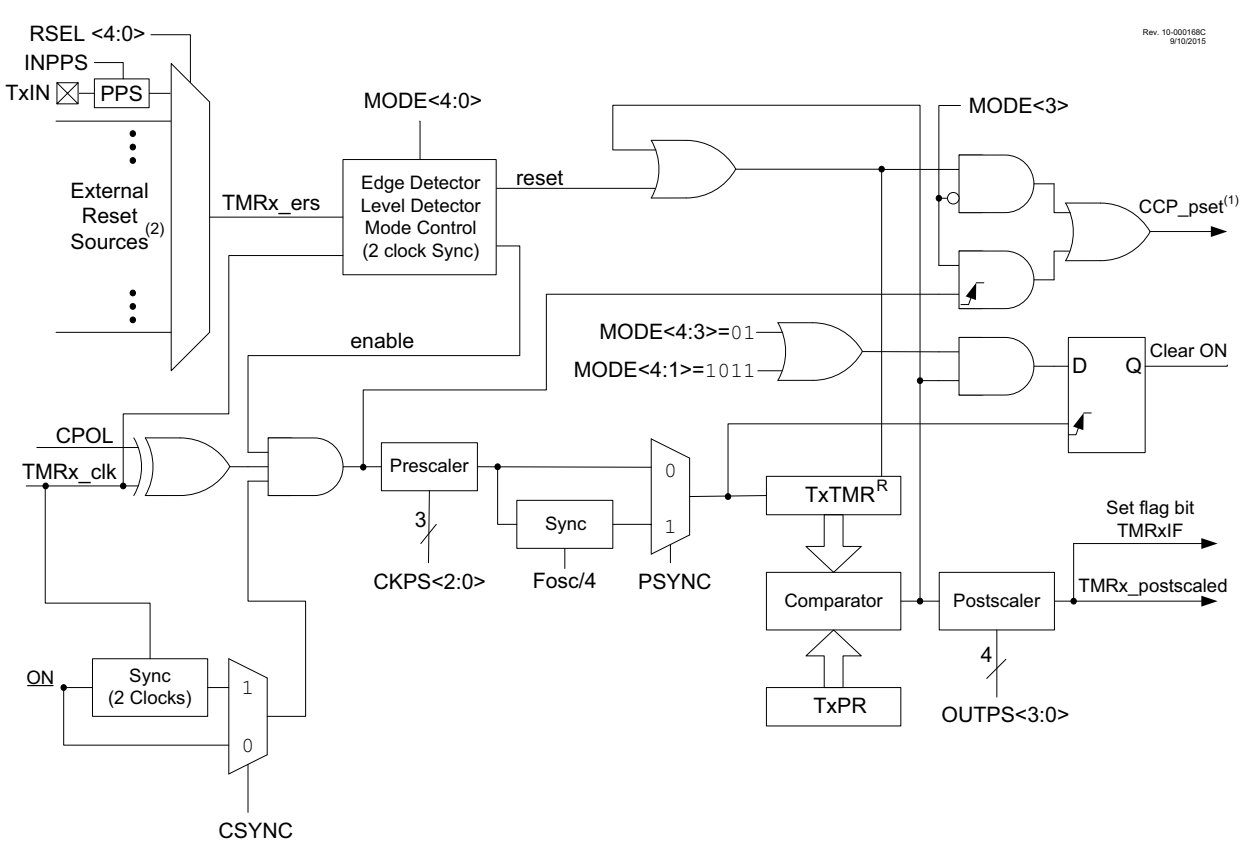

Note 1: Signal to the CCP to trigger the PWM pulse.
2: See Register 27-4 for external Reset sources.

FIGURE 27-2: TIMER2 CLOCK SOURCE BLOCK DIAGRAM

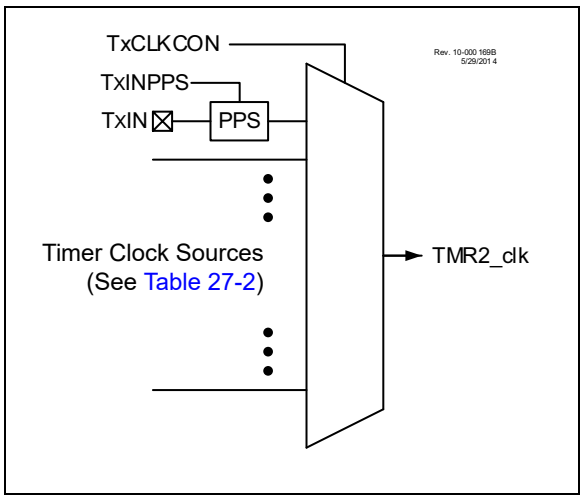

27.1 Timer2 Operation

Timer2 operates in three major modes:

- Free Running Period
- One Shot
- Monostable

Within each mode there are several options for starting, stopping, and Reset. Table 27-1 lists the options.

In all modes, the TMR2 count register is incremented on the rising edge of the clock signal from the programmable prescaler. When TMR2 equals T2PR, a high level is output to the postscaler counter. TMR2 is cleared on the next clock input.

An external signal from hardware can also be configured to gate the timer operation or force a TMR2 count Reset. In Gate modes the counter stops when the gate is disabled and resumes when the gate is enabled. In Reset modes the TMR2 count is reset on either the level or edge from the external source.

The TMR2 and T2PR registers are both directly readable and writable. The TMR2 register is cleared and the T2PR register initializes to FFh on any device Reset. Both the prescaler and postscaler counters are cleared on the following events:

- a write to the TMR2 register
- a write to the T2CON register
- any device Reset
- External Reset Source event that resets the timer.

Note:	TMR2 is not cleared when T2CON is written.

27.1.1 FREE RUNNING PERIOD MODE

The value of TMR2 is compared to that of the Period register, T2PR, on each TMR2_clk cycle. When the two values match, the comparator resets the value of TMR2 to 00h on the next rising TMR2_clk edge and increments the output postscaler counter. When the postscaler count equals the value in the OUTPS[4:0] bits of the TMRxCON1 register, a one TMR2_clk period wide pulse occurs on the TMR2_postscaled output, and the postscaler count is cleared.

27.1.2 ONE SHOT MODE

The One Shot mode is identical to the Free Running Period mode except that the ON bit is cleared and the timer is stopped when TMR2 matches T2PR and will not restart until the T2ON bit is cycled off and on. Postscaler OUTPS[4:0] values other than 0 are meaningless in this mode because the timer is stopped at the first period event and the postscaler is reset when the timer is restarted.

27.1.3 MONOSTABLE MODE

Monostable modes are similar to One Shot modes except that the ON bit is not cleared and the timer can be restarted by an external Reset event.

27.2 Timer2 Output

The Timer2 module's primary output is TMR2_postscaled, which pulses for a single TMR2_clk period when the postscaler counter matches the value in the OUTPS bits of the TMR2CON register. The T2PR postscaler is incremented each time the TMR2 value matches the T2PR value. This signal can be selected as an input to several other input modules:

- The ADC module, as an Auto-conversion Trigger
- COG, as an auto-shutdown source

In addition, the Timer2 is also used by the CCP module for pulse generation in PWM mode. Both the actual TMR2 value as well as other internal signals are sent to the CCP module to properly clock both the period and pulse width of the PWM signal. See **Section 28.0 "Capture/Compare/PWM Modules"** for more details on setting up Timer2 for use with the CCP, as well as the timing diagrams in **Section 27.5 "Operation Examples"** for examples of how the varying Timer2 modes affect CCP PWM output.

27.3 External Reset Sources

In addition to the clock source, the Timer2 also takes in an external Reset source. This external Reset source is selected for Timer2 with the T2RST register. This source can control starting and stopping of the timer, as well as resetting the timer, depending on which mode the timer is in. The mode of the timer is controlled by the MODE[4:0] bits of the TMRxHLT register. Edge-Triggered modes require six Timer clock periods between external triggers. Level-Triggered modes require the triggering level to be at least three Timer clock periods long. External triggers are ignored while in Debug Freeze mode.

TABLE 27-1: TIMER2 OPERATING MODES

Mode	MODE[4:0]		Output Operation	Operation	Timer Control		
	[4:3]	[2:0]			Start	Reset	Stop
Free Running Period	00	000	Period Pulse	Software gate (Figure 27-4)	ON = 1	—	ON = 0
		001		Hardware gate, active-high (Figure 27-5)	ON = 1 and TMRx_ers = 1	—	ON = 0 or TMRx_ers = 0
		010		Hardware gate, active-low	ON = 1 and TMRx_ers = 0	—	ON = 0 or TMRx_ers = 1
		011	Period Pulse with Hardware Reset	Rising or falling edge Reset	ON = 1	TMRx_ers ↕	ON = 0
		100		Rising edge Reset (Figure 27-6)		TMRx_ers ↑	
		101		Falling edge Reset		TMRx_ers ↓	
		110		Low level Reset		TMRx_ers = 0	ON = 0 or TMRx_ers = 0
		111		High level Reset (Figure 27-7)		TMRx_ers = 1	ON = 0 or TMRx_ers = 1
One Shot	01	000	One-shot	Software start (Figure 27-8)	ON = 1	—	ON = 0 or Next clock after TMRx = PRx (**Note 2**)
		001	Edge triggered start (**Note 1**)	Rising edge start (Figure 27-9)	ON = 1 and TMRx_ers ↑	—	
		010		Falling edge start	ON = 1 and TMRx_ers ↓	—	
		011		Any edge start	ON = 1 and TMRx_ers ↕	—	
		100	Edge triggered start and hardware Reset (**Note 1**)	Rising edge start and Rising edge Reset (Figure 27-10)	ON = 1 and TMRx_ers ↑	TMRx_ers ↑	
		101		Falling edge start and Falling edge Reset	ON = 1 and TMRx_ers ↓	TMRx_ers ↓	
		110		Rising edge start and Low level Reset (Figure 27-11)	ON = 1 and TMRx_ers ↑	TMRx_ers = 0	
		111		Falling edge start and High level Reset	ON = 1 and TMRx_ers ↓	TMRx_ers = 1	
Monostable	10	000	Reserved				
		001	Edge triggered start (**Note 1**)	Rising edge start (Figure 27-12)	ON = 1 and TMRx_ers ↑	—	ON = 0 or Next clock after TMRx = PRx (**Note 3**)
		010		Falling edge start	ON = 1 and TMRx_ers ↓	—	
		011		Any edge start	ON = 1 and TMRx_ers ↕	—	
Reserved		100	Reserved				
Reserved		101	Reserved				
One Shot		110	Level triggered start and hardware Reset	High level start and Low level Reset (Figure 27-13)	ON = 1 and TMRx_ers = 1	TMRx_ers = 0	ON = 0 or Held in Reset (**Note 2**)
		111		Low level start and High level Reset	ON = 1 and TMRx_ers = 0	TMRx_ers = 1	
Reserved	11	xxx	Reserved				

Note 1: If ON = 0 then an edge is required to restart the timer after ON = 1.
2: When TMRx = PRx then the next clock clears ON and stops TMRx at 00h.
3: When TMRx = PRx then the next clock stops TMRx at 00h but does not clear ON.

27.4 Timer2 Interrupt

Timer2 can also generate a device interrupt. The interrupt is generated when the postscaler counter matches one of 16 postscale options (from 1:1 through 1:16), which are selected with the postscaler control bits, OUTPS[3:0] of the T2CON register. The interrupt is enabled by setting the TMR2IE interrupt enable bit of the PIE4 register. Interrupt timing is illustrated in Figure 27-3.

FIGURE 27-3: TIMER2 PRESCALER, POSTSCALER, AND INTERRUPT TIMING DIAGRAM

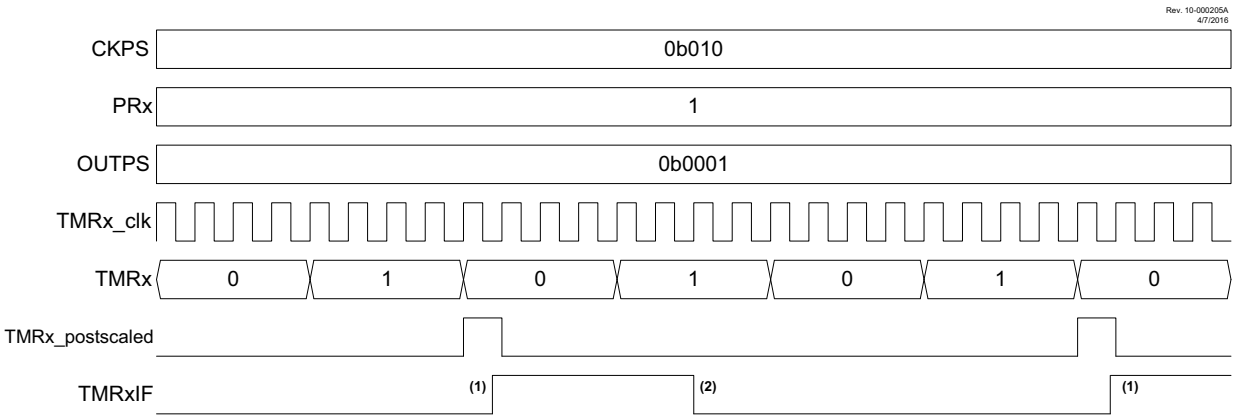

Note 1: Setting the interrupt flag is synchronized with the instruction clock. Synchronization may take as many as 2 instruction cycles
2: Cleared by software.

27.5 Operation Examples

Unless otherwise specified, the following notes apply to the following timing diagrams:

- Both the prescaler and postscaler are set to 1:1 (both the CKPS and OUTPS bits in the TxCON register are cleared).
- The diagrams illustrate any clock except Fosc/4 and show clock-sync delays of at least two full cycles for both ON and Timer2_ers. When using Fosc/4, the clock-sync delay is at least one instruction period for Timer2_ers; ON applies in the next instruction period.
- The PWM Duty Cycle and PWM output are illustrated assuming that the timer is used for the PWM function of the CCP module as described in **Section 28.0 "Capture/Compare/PWM Modules"**. The signals are not a part of the Timer2 module.

27.5.1 SOFTWARE GATE MODE

This mode corresponds to legacy Timer2 operation. The timer increments with each clock input when ON = `1` and does not increment when ON = `0`. When the TMRx count equals the PRx period count the timer resets on the next clock and continues counting from 0. Operation with the ON bit software controlled is illustrated in Figure 27-4. With PRx = 5, the counter advances until TMRx = 5, and goes to zero with the next clock.

FIGURE 27-4: SOFTWARE GATE MODE TIMING DIAGRAM (MODE = 00000)

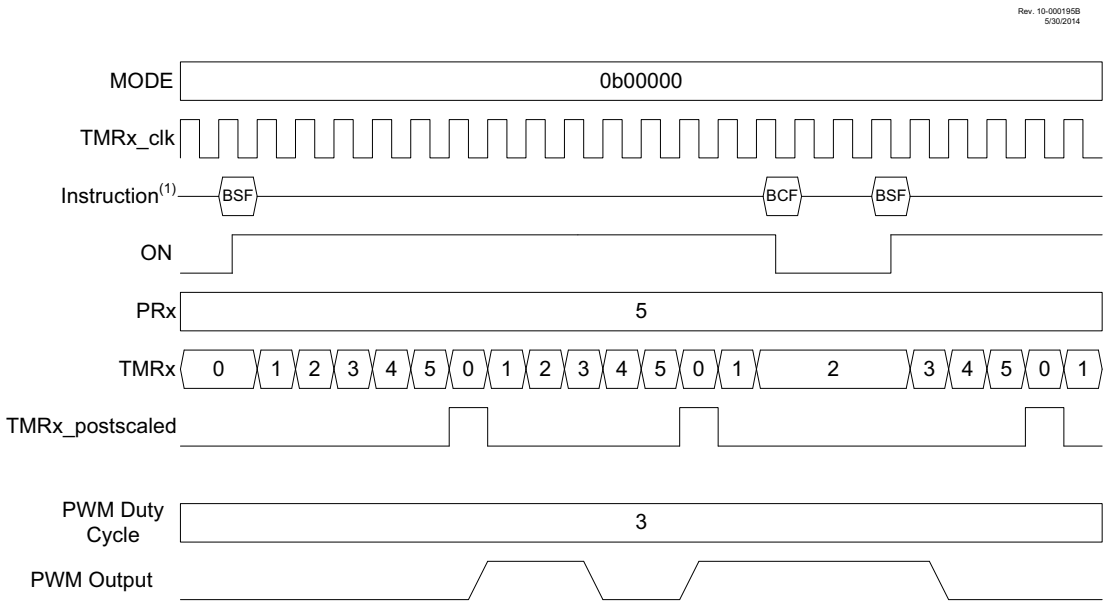

Note 1: BSF and BCF represent Bit-Set File and Bit-Clear File instructions executed by the CPU to set or clear the ON bit of TxCON. CPU execution is asynchronous to the timer clock input.

27.5.2 HARDWARE GATE MODE

The Hardware Gate modes operate the same as the Software Gate mode except the TMRx_ers external signal gates the timer. When used with the CCP the gating extends the PWM period. If the timer is stopped when the PWM output is high then the duty cycle is also extended.

When MODE[4:0] = `00001` then the timer is stopped when the external signal is high. When MODE[4:0] = `00010` then the timer is stopped when the external signal is low.

Figure 27-5 illustrates the Hardware Gating mode for MODE[4:0] = `00001` in which a high input level starts the counter.

FIGURE 27-5: HARDWARE GATE MODE TIMING DIAGRAM (MODE = `00001`)

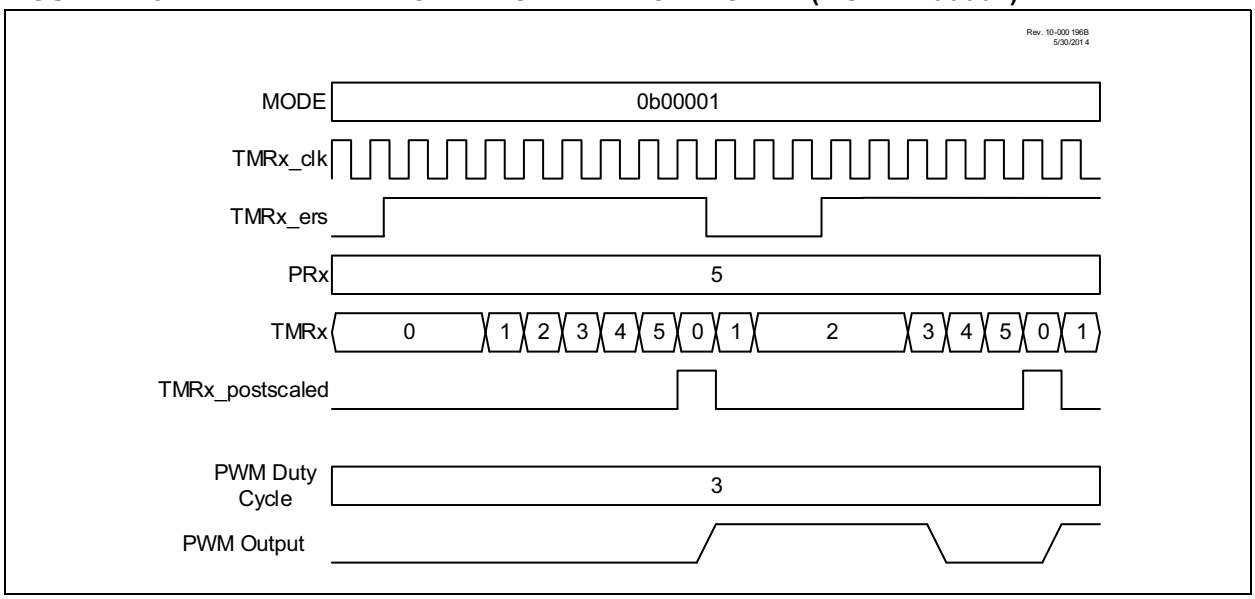

27.5.3 EDGE-TRIGGERED HARDWARE LIMIT MODE

In Hardware Limit mode the timer can be reset by the TMRx_ers external signal before the timer reaches the period count. Three types of Resets are possible:

- Reset on rising or falling edge (MODE[4:0]= `00011`)
- Reset on rising edge (MODE[4:0] = `00100`)
- Reset on falling edge (MODE[4:0] = `00101`)

When the timer is used in conjunction with the CCP in PWM mode then an early Reset shortens the period and restarts the PWM pulse after a two clock delay. Refer to Figure 27-6.

FIGURE 27-6: EDGE-TRIGGERED HARDWARE LIMIT MODE TIMING DIAGRAM (MODE = `00100`)

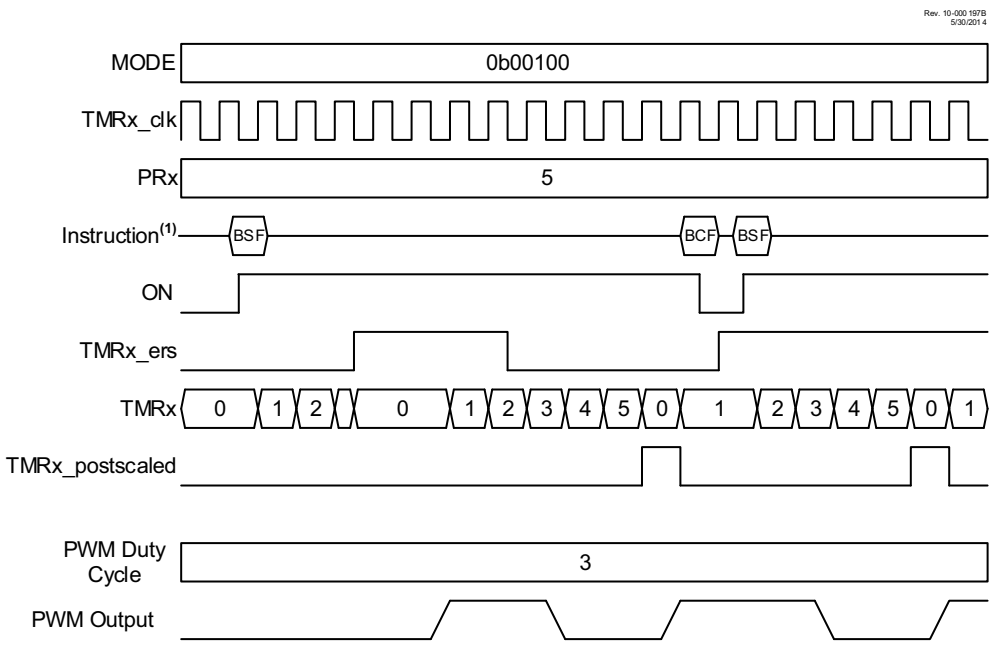

Note 1: BSF and BCF represent Bit-Set File and Bit-Clear File instructions executed by the CPU to set or clear the ON bit of TxCON. CPU execution is asynchronous to the timer clock input.

27.5.4 LEVEL-TRIGGERED HARDWARE LIMIT MODE

In the Level-Triggered Hardware Limit Timer modes the counter is reset by high or low levels of the external signal TMRx_ers, as shown in Figure 27-7. Selecting MODE[4:0] = `00110` will cause the timer to reset on a low level external signal. Selecting MODE[4:0] = `00111` will cause the timer to reset on a high level external signal. In the example, the counter is reset while TMRx_ers = `1`. ON is controlled by BSF and BCF instructions. When ON = `0` the external signal is ignored.

When the CCP uses the timer as the PWM time base then the PWM output will be set high when the timer starts counting and then set low only when the timer count matches the CCPRx value. The timer is reset when either the timer count matches the PRx value or two clock periods after the external Reset signal goes true and stays true.

The timer starts counting, and the PWM output is set high, on either the clock following the PRx match or two clocks after the external Reset signal relinquishes the Reset. The PWM output will remain high until the timer counts up to match the CCPRx pulse width value. If the external Reset signal goes true while the PWM output is high then the PWM output will remain high until the Reset signal is released allowing the timer to count up to match the CCPRx value.

FIGURE 27-7: LEVEL-TRIGGERED HARDWARE LIMIT MODE TIMING DIAGRAM (MODE = `00111`)

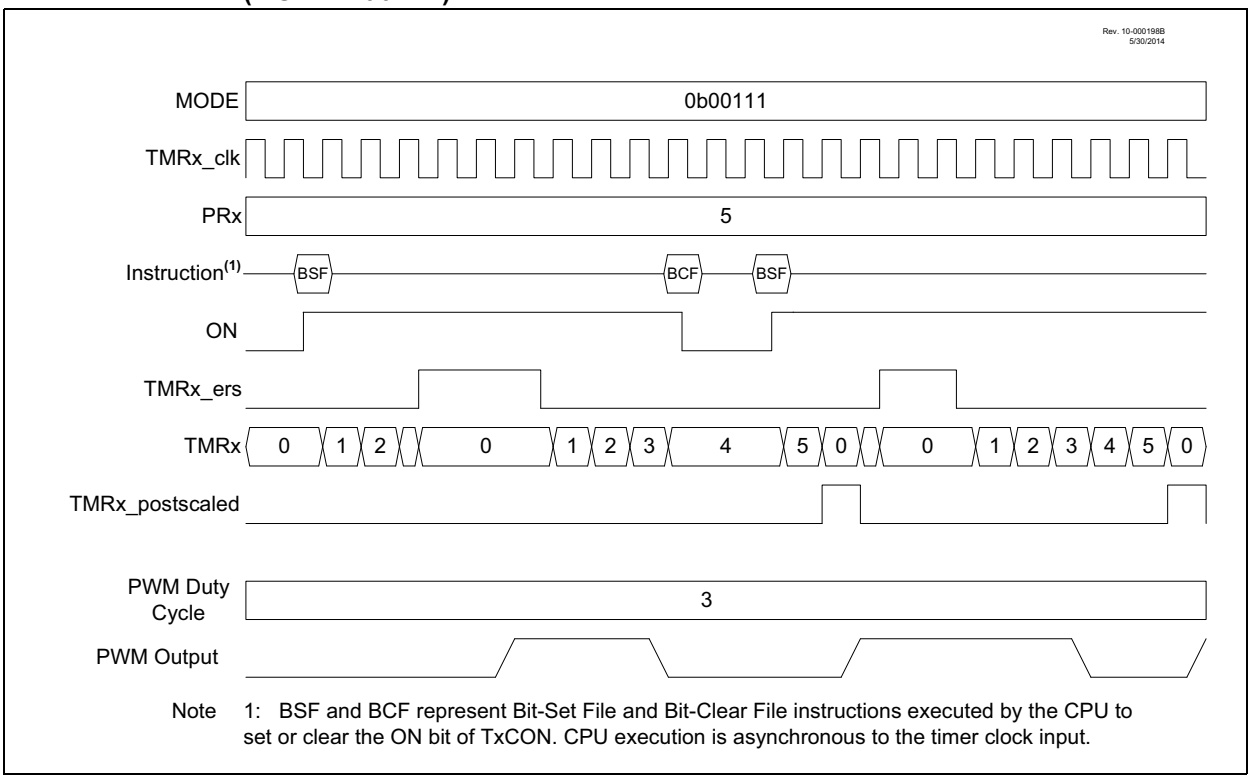

Note 1: BSF and BCF represent Bit-Set File and Bit-Clear File instructions executed by the CPU to set or clear the ON bit of TxCON. CPU execution is asynchronous to the timer clock input.

27.5.5 SOFTWARE START ONE SHOT MODE

In One Shot mode the timer resets and the ON bit is cleared when the timer value matches the PRx period value. The ON bit must be set by software to start another timer cycle. Setting MODE[4:0] = `01000` selects One Shot mode which is illustrated in Figure 27-8. In the example, ON is controlled by BSF and BCF instructions. In the first case, a BSF instruction sets ON and the counter runs to completion and clears ON. In the second case, a BSF instruction starts the cycle, BCF/BSF instructions turn the counter off and on during the cycle, and then it runs to completion.

When One Shot mode is used in conjunction with the CCP PWM operation the PWM pulse drive starts concurrent with setting the ON bit. Clearing the ON bit while the PWM drive is active will extend the PWM drive. The PWM drive will terminate when the timer value matches the CCPRx pulse width value. The PWM drive will remain off until software sets the ON bit to start another cycle. If software clears the ON bit after the CCPRx match but before the PRx match then the PWM drive will be extended by the length of time the ON bit remains cleared. Another timing cycle can only be initiated by setting the ON bit after it has been cleared by a PRx period count match.

FIGURE 27-8: SOFTWARE START ONE SHOT MODE TIMING DIAGRAM (MODE = `01000`)

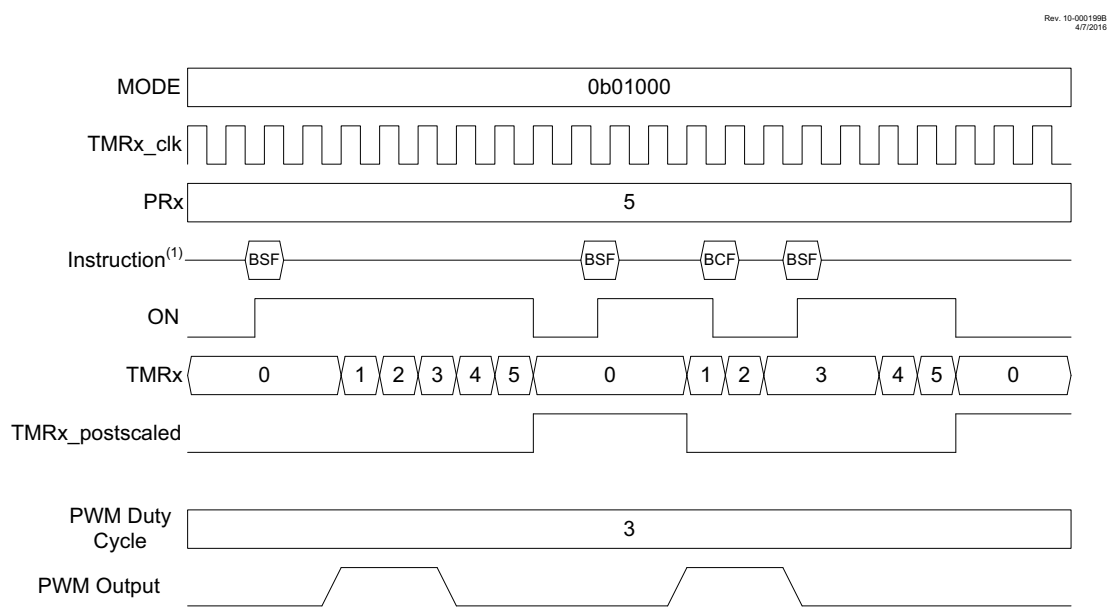

Note 1: BSF and BCF represent Bit-Set File and Bit-Clear File instructions executed by the CPU to set or clear the ON bit of TxCON. CPU execution is asynchronous to the timer clock input.

27.5.6 EDGE-TRIGGERED ONE SHOT MODE

The Edge-Triggered One Shot modes start the timer on an edge from the external signal input, after the ON bit is set, and clear the ON bit when the timer matches the PRx period value. The following edges will start the timer:

- Rising edge (MODE[4:0] = `01001`)
- Falling edge (MODE[4:0] = `01010`)
- Rising or Falling edge (MODE[4:0] = `01011`)

If the timer is halted by clearing the ON bit then another TMRx_ers edge is required after the ON bit is set to resume counting. Figure 27-9 illustrates operation in the rising edge One Shot mode.

When Edge-Triggered One Shot mode is used in conjunction with the CCP then the edge-trigger will activate the PWM drive and the PWM drive will deactivate when the timer matches the CCPRx pulse width value and stay deactivated when the timer halts at the PRx period count match.

FIGURE 27-9: EDGE-TRIGGERED ONE SHOT MODE TIMING DIAGRAM (MODE = `01001`)

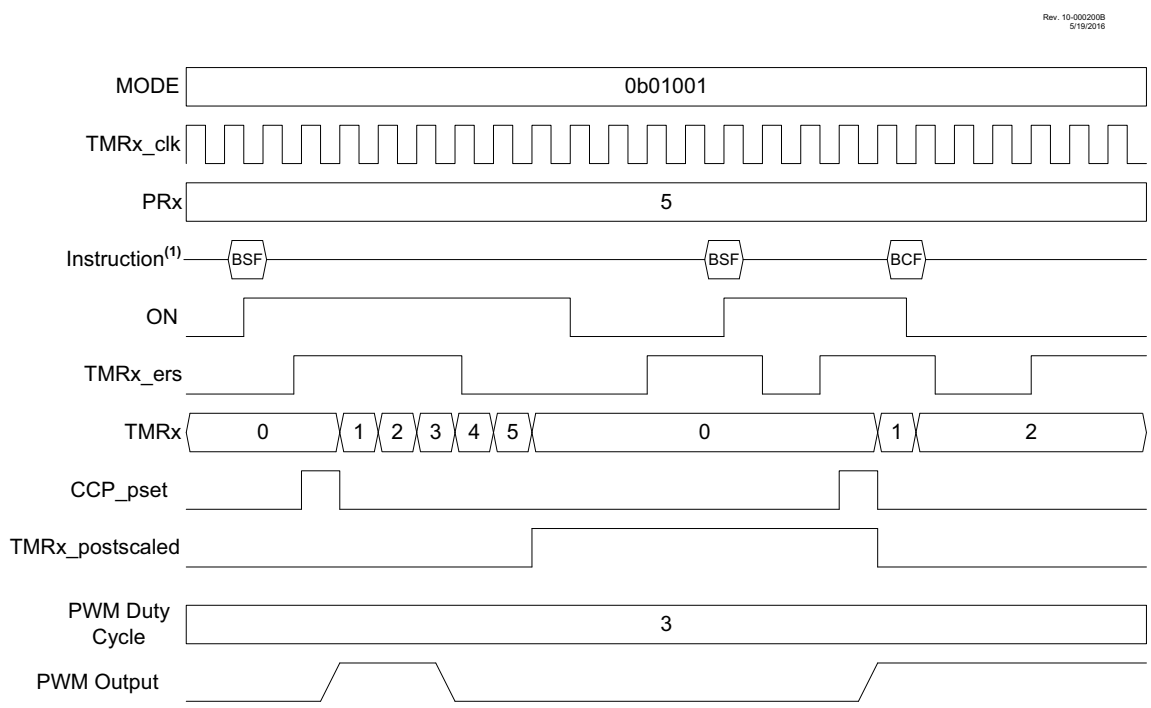

Note 1: BSF and BCF represent Bit-Set File and Bit-Clear File instructions executed by the CPU to set or clear the ON bit of TxCON. CPU execution is asynchronous to the timer clock input.

27.5.7 EDGE-TRIGGERED HARDWARE LIMIT ONE SHOT MODE

In Edge-Triggered Hardware Limit One Shot modes the timer starts on the first external signal edge after the ON bit is set and resets on all subsequent edges. Only the first edge after the ON bit is set is needed to start the timer. The counter will resume counting automatically two clocks after all subsequent external Reset edges. Edge triggers are as follows:

- Rising edge start and Reset (MODE[4:0] = `01100`)
- Falling edge start and Reset (MODE[4:0] = `01101`)

The timer resets and clears the ON bit when the timer value matches the PRx period value. External signal edges will have no effect until after software sets the ON bit. Figure 27-10 illustrates the rising edge hardware limit one-shot operation.

When this mode is used in conjunction with the CCP then the first starting edge trigger, and all subsequent Reset edges, will activate the PWM drive. The PWM drive will deactivate when the timer matches the CCPRx pulse-width value and stay deactivated until the timer halts at the PRx period match unless an external signal edge resets the timer before the match occurs.

FIGURE 27-10: EDGE-TRIGGERED HARDWARE LIMIT ONE SHOT MODE TIMING DIAGRAM (MODE = 01100)

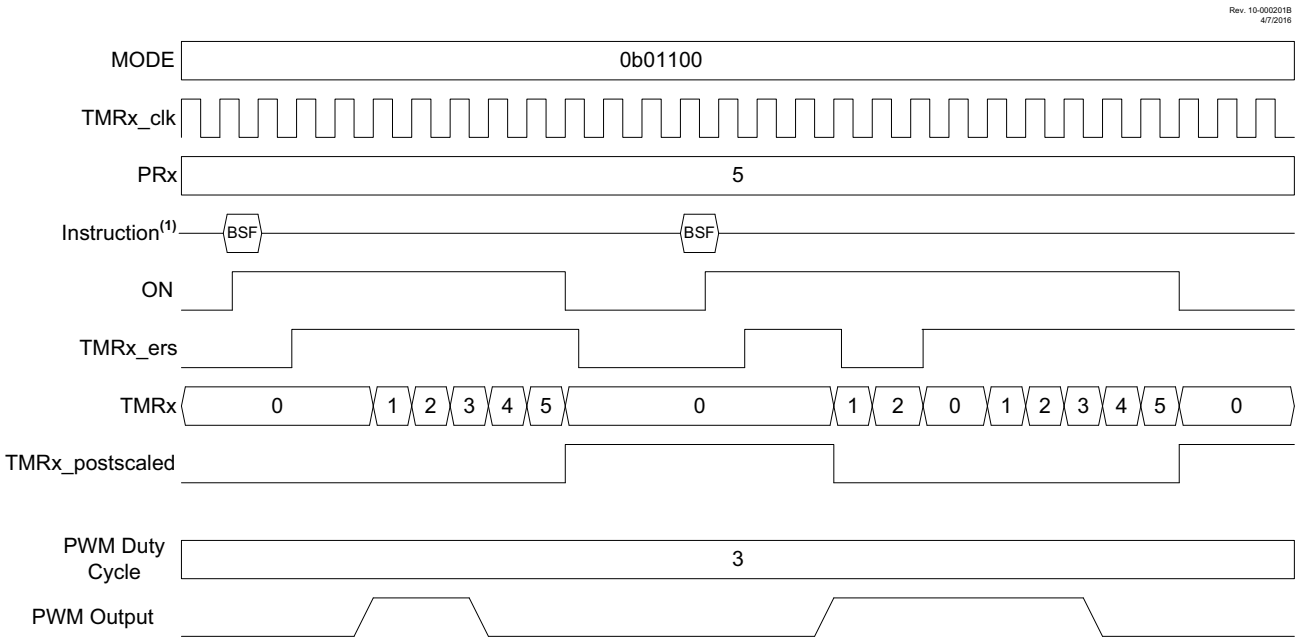

Note 1: BSF and BCF represent Bit-Set File and Bit-Clear File instructions executed by the CPU to set or clear the ON bit of TxCON. CPU execution is asynchronous to the timer clock input.

© 2017-2021 Microchip Technology Inc.

27.5.8 LEVEL RESET, EDGE-TRIGGERED HARDWARE LIMIT ONE SHOT MODES

In Level -Triggered One Shot mode the timer count is reset on the external signal level and starts counting on the rising/falling edge of the transition from Reset level to the active level while the ON bit is set. Reset levels are selected as follows:

- Low Reset level (MODE[4:0] = `01110`)
- High Reset level (MODE[4:0] = `01111`)

When the timer count matches the PRx period count, the timer is reset and the ON bit is cleared. When the ON bit is cleared by either a PRx match or by software control a new external signal edge is required after the ON bit is set to start the counter.

When Level-Triggered Reset One Shot mode is used in conjunction with the CCP PWM operation the PWM drive goes active with the external signal edge that starts the timer. The PWM drive goes inactive when the timer count equals the CCPRx pulse width count. The PWM drive does not go active when the timer count clears at the PRx period count match.

FIGURE 27-11: LOW LEVEL RESET, EDGE-TRIGGERED HARDWARE LIMIT ONE SHOT MODE TIMING DIAGRAM (MODE = 01110)

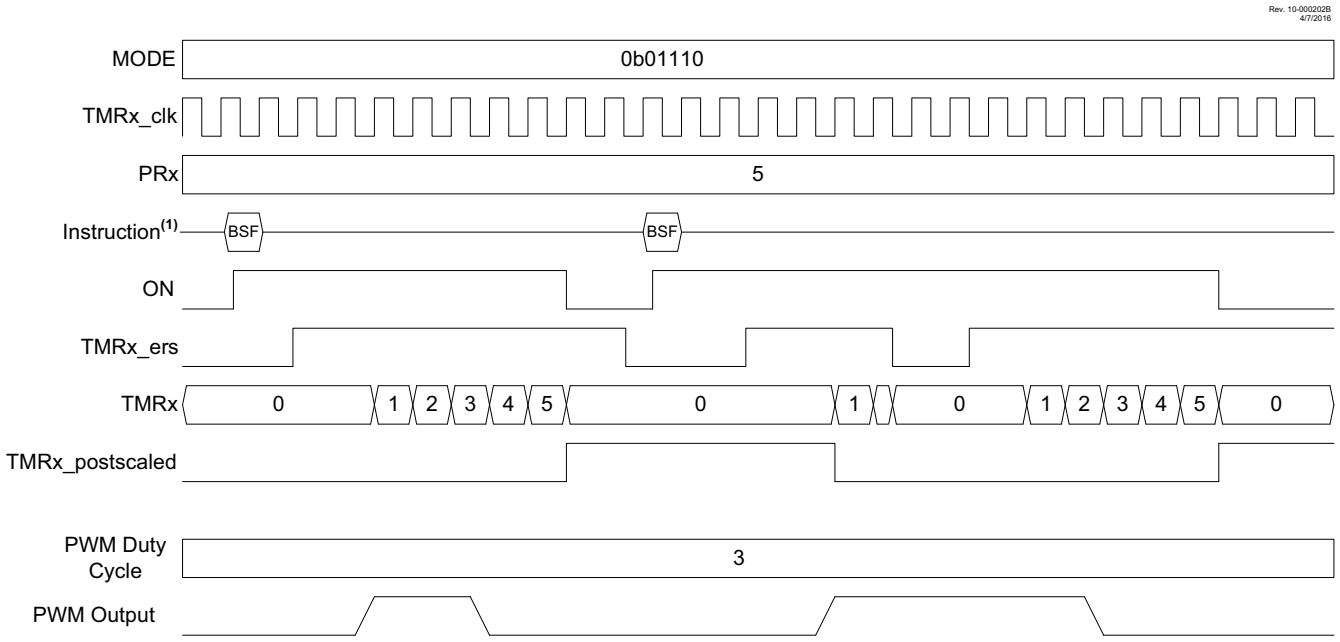

Note 1: BSF and BCF represent Bit-Set File and Bit-Clear File instructions executed by the CPU to set or clear the ON bit of TxCON. CPU execution is asynchronous to the timer clock input.

© 2017-2021 Microchip Technology Inc.

27.5.9 EDGE-TRIGGERED MONOSTABLE MODES

The Edge-Triggered Monostable modes start the timer on an edge from the external Reset signal input, after the ON bit is set, and stop incrementing the timer when the timer matches the PRx period value. The following edges will start the timer:

- Rising edge (MODE[4:0] = `10001`)
- Falling edge (MODE[4:0] = `10010`)
- Rising or Falling edge (MODE[4:0] = `10011`)

When an Edge-Triggered Monostable mode is used in conjunction with the CCP PWM operation the PWM drive goes active with the external Reset signal edge that starts the timer, but will not go active when the timer matches the PRx value. While the timer is incrementing, additional edges on the external Reset signal will not affect the CCP PWM.

FIGURE 27-12: RISING EDGE-TRIGGERED MONOSTABLE MODE TIMING DIAGRAM (MODE = 10001)

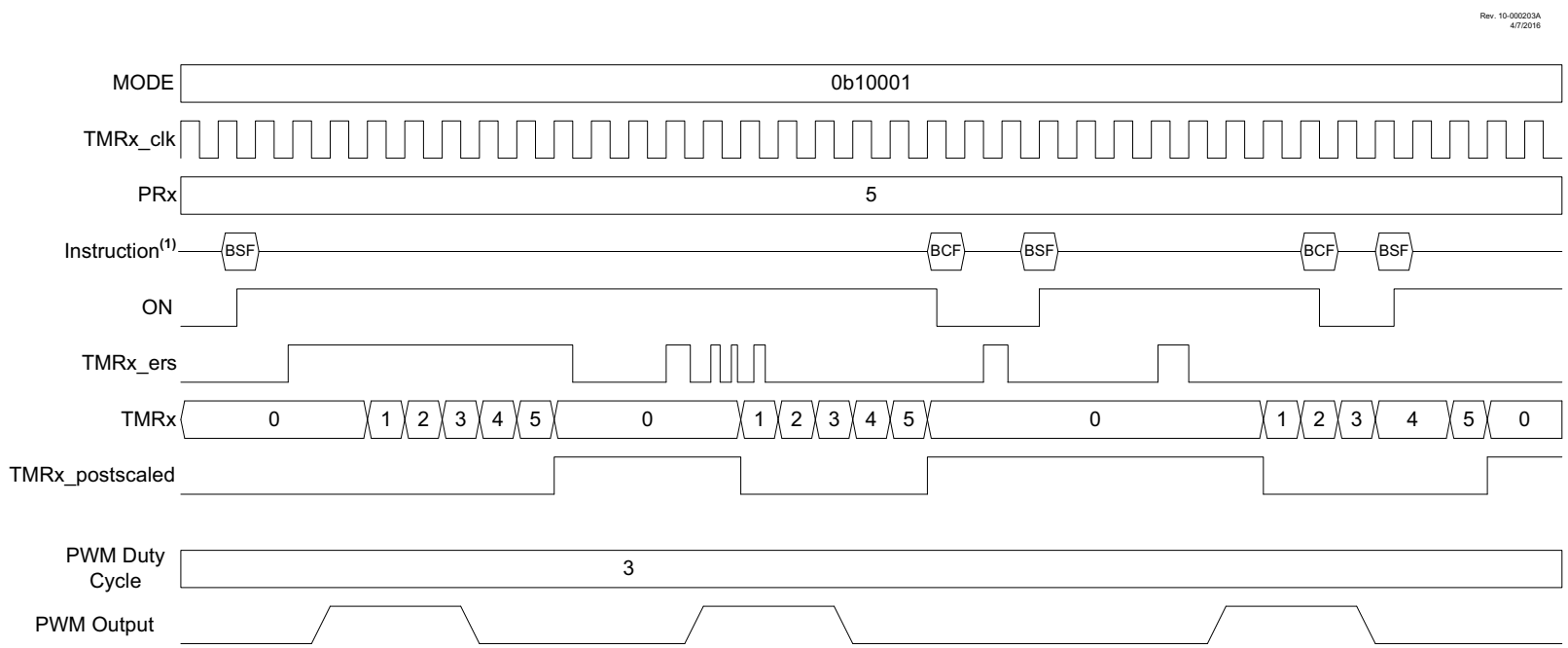

Note 1: BSF and BCF represent Bit-Set File and Bit-Clear File instructions executed by the CPU to set or clear the ON bit of TxCON. CPU execution is asynchronous to the timer clock input.

© 2017-2021 Microchip Technology Inc.

27.5.10 LEVEL-TRIGGERED HARDWARE LIMIT ONE SHOT MODES

The Level-Triggered Hardware Limit One Shot modes hold the timer in Reset on an external Reset level and start counting when both the ON bit is set and the external signal is not at the Reset level. If one of either the external signal is not in Reset or the ON bit is set then the other signal being set/made active will start the timer. Reset levels are selected as follows:

- Low Reset level (MODE[4:0] = `10110`)
- High Reset level (MODE[4:0] = `10111`)

When the timer count matches the PRx period count, the timer is reset and the ON bit is cleared. When the ON bit is cleared by either a PRx match or by software control the timer will stay in Reset until both the ON bit is set and the external signal is not at the Reset level.

When Level-Triggered Hardware Limit One Shot modes are used in conjunction with the CCP PWM operation the PWM drive goes active with either the external signal edge or the setting of the ON bit, whichever of the two starts the timer.

FIGURE 27-13: LEVEL-TRIGGERED HARDWARE LIMIT ONE SHOT MODE TIMING DIAGRAM (MODE = 10110)

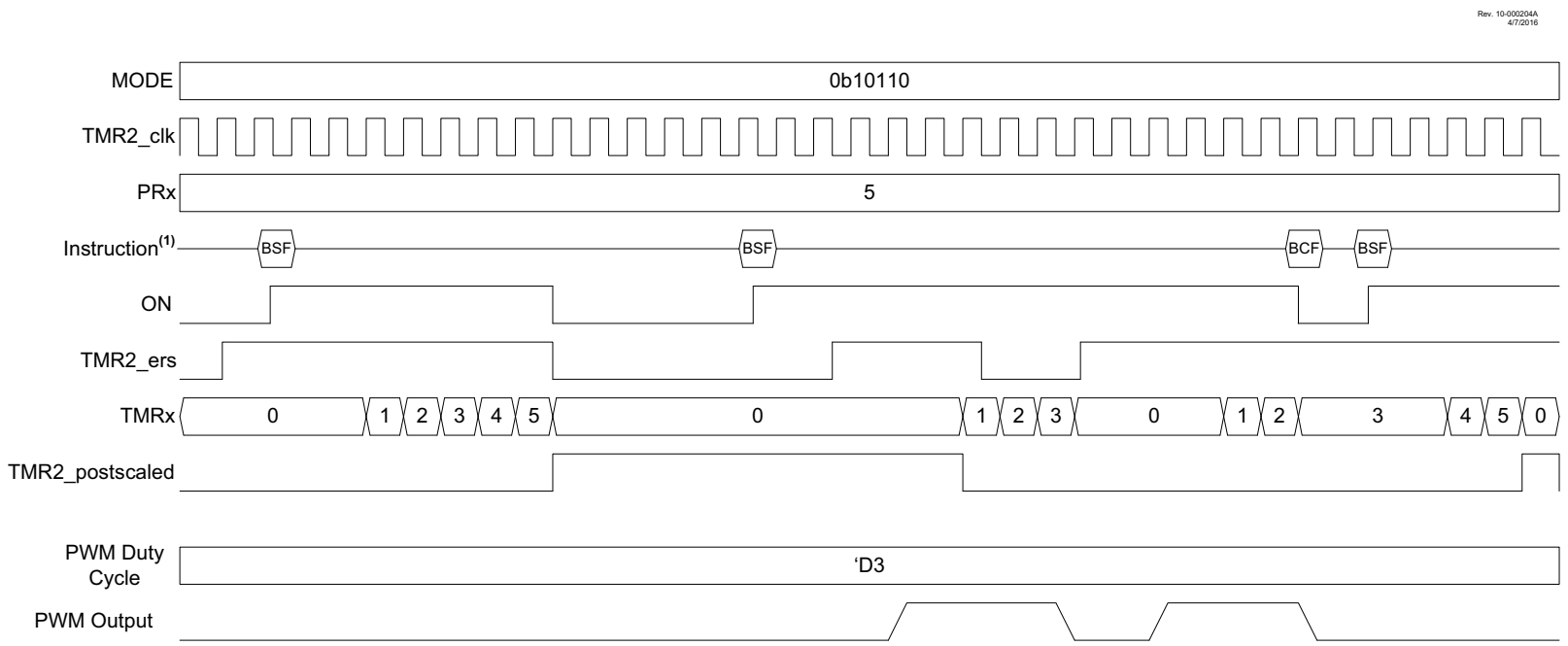

Note 1: BSF and BCF represent Bit-Set File and Bit-Clear File instructions executed by the CPU to set or clear the ON bit of TxCON. CPU execution is asynchronous to the timer clock input.

© 2017-2021 Microchip Technology Inc.

27.6 Timer2 Operation During Sleep

When PSYNC = 1, Timer2 cannot be operated while the processor is in Sleep mode. The contents of the TMR2 and T2PR registers will remain unchanged while processor is in Sleep mode.

When PSYNC = 0, Timer2 will operate in Sleep as long as the clock source selected is also still running. Selecting the LFINTOSC, MFINTOSC, or HFINTOSC oscillator as the timer clock source will keep the selected oscillator running during Sleep.

27.7 Register Definitions: Timer2 Control

REGISTER 27-1: T2CLKCON: TIMER2 CLOCK SELECTION REGISTER

U-0	U-0	U-0	U-0	R/W-0/0	R/W-0/0	R/W-0/0	R/W-0/0
—	—	—	—	CS[3:0]			
bit 7							bit 0

Legend:		
R = Readable bit	W = Writable bit	U = Unimplemented bit, read as ‘0’
u = Bit is unchanged	x = Bit is unknown	-n/n = Value at POR and BOR/Value at all other Resets
‘1’ = Bit is set	‘0’ = Bit is cleared	

bit 7-4 **Unimplemented:** Read as ‘0’

bit 3-0 **CS[3:0]:** Timer2 Clock Select bits

`1111` = Reserved
`1110` = LC4_out
`1101` = LC3_out
`1100` = LC2_out
`1011` = LC1_out
`1010` = ZCD1_output
`1001` = NCO1_out
`1000` = CLKR
`0111` = Reserved
`0110` = MFINTOSC (31.25 kHz)
`0101` = MFINTOSC (500 kHz)
`0100` = LFINTOSC
`0011` = HFINTOSC (32 MHz)
`0010` = Fosc
`0001` = Fosc/4
`0000` = T2CKIPPS

REGISTER 27-2: T2CON: TIMER2 CONTROL REGISTER

R/W/HC-0/0	R/W-0/0	R/W-0/0	R/W-0/0	R/W-0/0	R/W-0/0	R/W-0/0	R/W-0/0
ON[(1)]	CKPS[2:0]			OUTPS[3:0]			
bit 7							bit 0

Legend:		
R = Readable bit	W = Writable bit	U = Unimplemented bit, read as ‘0’
u = Bit is unchanged	x = Bit is unknown	-n/n = Value at POR and BOR/Value at all other Resets
‘1’ = Bit is set	‘0’ = Bit is cleared	HC = Bit is cleared by hardware

bit 7 **ON:** Timerx On bit
`1` = Timerx is on
`0` = Timerx is off: all counters and state machines are reset

bit 6-4 **CKPS[2:0]:** Timer2-type Clock Prescale Select bits
`111` = 1:128 Prescaler
`110` = 1:64 Prescaler
`101` = 1:32 Prescaler
`100` = 1:16 Prescaler
`011` = 1:8 Prescaler
`010` = 1:4 Prescaler
`001` = 1:2 Prescaler
`000` = 1:1 Prescaler

bit 3-0 **OUTPS[3:0]:** Timerx Output Postscaler Select bits
`1111` = 1:16 Postscaler
`1110` = 1:15 Postscaler
`1101` = 1:14 Postscaler
`1100` = 1:13 Postscaler
`1011` = 1:12 Postscaler
`1010` = 1:11 Postscaler
`1001` = 1:10 Postscaler
`1000` = 1:9 Postscaler
`0111` = 1:8 Postscaler
`0110` = 1:7 Postscaler
`0101` = 1:6 Postscaler
`0100` = 1:5 Postscaler
`0011` = 1:4 Postscaler
`0010` = 1:3 Postscaler
`0001` = 1:2 Postscaler
`0000` = 1:1 Postscaler

Note 1: In certain modes, the ON bit will be auto-cleared by hardware. See **Section 27.5 “Operation Examples”**.

REGISTER 27-3: T2HLT: TIMERx HARDWARE LIMIT CONTROL REGISTER

R/W-0/0	R/W-0/0	R/W-0/0	R/W-0/0	R/W-0/0	R/W-0/0	R/W-0/0	R/W-0/0
PSYNC(1, 2)	CKPOL(3)	CKSYNC(4, 5)	MODE[4:0](6, 7)				
bit 7							bit 0

Legend:		
R = Readable bit	W = Writable bit	U = Unimplemented bit, read as ‘0’
u = Bit is unchanged	x = Bit is unknown	-n/n = Value at POR and BOR/Value at all other Resets
‘1’ = Bit is set	‘0’ = Bit is cleared	

bit 7 **PSYNC:** Timerx Prescaler Synchronization Enable bit(1, 2)
`1` = TMRx Prescaler Output is synchronized to Fosc/4
`0` = TMRx Prescaler Output is not synchronized to Fosc/4

bit 6 **CKPOL:** Timerx Clock Polarity Selection bit(3)
`1` = Falling edge of input clock clocks timer/prescaler
`0` = Rising edge of input clock clocks timer/prescaler

bit 5 **CKSYNC:** Timerx Clock Synchronization Enable bit(4, 5)
`1` = ON register bit is synchronized to TMR2_clk input
`0` = ON register bit is not synchronized to TMR2_clk input

bit 4-0 **MODE[4:0]:** Timerx Control Mode Selection bits(6, 7)
See Table 27-1.

Note 1: Setting this bit ensures that reading TMRx will return a valid value.
2: When this bit is ‘`1`’, Timer2 cannot operate in Sleep mode.
3: CKPOL may not be changed while ON = `1`.
4: Setting this bit ensures glitch-free operation when the ON is enabled or disabled.
5: When this bit is set then the timer operation will be delayed by two TMRx input clocks after the ON bit is set.
6: Unless otherwise indicated, all modes start upon ON = `1` and stop upon ON = `0` (stops occur without affecting the value of TMRx).
7: When TMRx = PRx, the next clock clears TMRx, regardless of the operating mode.

REGISTER 27-4: T2RST: TIMER2 EXTERNAL RESET SIGNAL SELECTION REGISTER

U-0	U-0	U-0	U-0	R/W-0/0	R/W-0/0	R/W-0/0	R/W-0/0
—	—	—	—	RSEL[3:0]			
bit 7							bit 0

Legend:		
R = Readable bit	W = Writable bit	U = Unimplemented bit, read as ‘0’
u = Bit is unchanged	x = Bit is unknown	-n/n = Value at POR and BOR/Value at all other Resets
‘1’ = Bit is set	‘0’ = Bit is cleared	

bit 7-4 **Unimplemented:** Read as ‘0’

bit 3-0 **RSEL[3:0]:** Timer2 External Reset Signal Source Selection bits
1111 = Reserved
1101 = LC4_out
1100 = LC3_out
1011 = LC2_out
1010 = LC1_out
1001 = ZCD1_output
1000 = C2OUT_sync
0111 = C1OUT_sync
0110 = PWM6_out
0101 = PWM5_out
0100 = PWM4_out
0011 = PWM3_out
0010 = CCP2_out
0001 = CCP1_out
0000 = T2INPPS

TABLE 27-2: SUMMARY OF REGISTERS ASSOCIATED WITH TIMER2

Name	Bit 7	Bit 6	Bit 5	Bit 4	Bit 3	Bit 2	Bit 1	Bit 0	Register on Page
CCP1CON	EN	—	OUT	FMT	MODE[3:0]				322
CCP2CON	EN	—	OUT	FMT	MODE[3:0]				322
INTCON	GIE	PEIE	—	—	—	—	—	INTEDG	125
PIE1	OSFIE	CSWIE	—	—	—	—	—	ADIE	127
PIR1	OSFIF	CSWIF	—	—	—	—	—	ADIF	135
PR2	Timer2 Module Period Register								
TMR2	Holding Register for the 8-bit TMR2 Register								
T2CON	ON	CKPS[2:0]			OUTPS[3:0]				311
T2CLKCON	—	—	—	—	CS[3:0]				310
T2RST	—	—	—	—	RSEL[3:0]				313
T2HLT	PSYNC	CKPOL	CKSYNC	MODE[4:0]					312

Legend: — = unimplemented location, read as '0'. Shaded cells are not used for Timer2 module.

28.0 CAPTURE/COMPARE/PWM MODULES

The Capture/Compare/PWM module is a peripheral that allows the user to time and control different events, and to generate Pulse-Width Modulation (PWM) signals. In Capture mode, the peripheral allows the timing of the duration of an event. The Compare mode allows the user to trigger an external event when a predetermined amount of time has expired. The PWM mode can generate Pulse-Width Modulated signals of varying frequency and duty cycle.

The Capture/Compare/PWM modules available are shown in Table 28-1.

TABLE 28-1: AVAILABLE CCP MODULES

Device	CCP1	CCP2
PIC16(L)F15324/44	•	•

The Capture and Compare functions are identical for all CCP modules.

Note 1: In devices with more than one CCP module, it is very important to pay close attention to the register names used. A number placed after the module acronym is used to distinguish between separate modules. For example, the CCP1CON and CCP2CON control the same operational aspects of two completely different CCP modules.

2: Throughout this section, generic references to a CCP module in any of its operating modes may be interpreted as being equally applicable to CCPx module. Register names, module signals, I/O pins, and bit names may use the generic designator ‘x’ to indicate the use of a numeral to distinguish a particular module, when required.

28.1 Capture Mode

Capture mode makes use of the 16-bit Timer1 resource. When an event occurs on the capture source, the 16-bit CCPRxH:CCPRxL register pair captures and stores the 16-bit value of the TMR1H:TMR1L register pair, respectively. An event is defined as one of the following and is configured by the CCPxMODE[3:0] bits of the CCPxCON register:

- Every falling edge
- Every rising edge
- Every 4th rising edge
- Every 16th rising edge

When a capture is made, the Interrupt Request Flag bit CCPxIF of the PIR6 register is set. The interrupt flag must be cleared in software. If another capture occurs before the value in the CCPRxH, CCPRxL register pair is read, the old captured value is overwritten by the new captured value.

Figure 28-1 shows a simplified diagram of the capture operation.

28.1.1 CAPTURE SOURCES

In Capture mode, the CCPx pin may be configured as an input by setting the associated TRIS control bit.

Note:	If the CCPx pin is configured as an output, a write to the port can cause a capture condition.

The capture source is selected by configuring the CCPxCTS[2:0] bits of the CCPxCAP register. The following sources can be selected:

- CCPxPPS input
- C1OUT_sync
- C2OUT_sync
- IOC_interrupt
- LC1_out
- LC2_out
- LC3_out
- LC4_out

FIGURE 28-1: CAPTURE MODE OPERATION BLOCK DIAGRAM

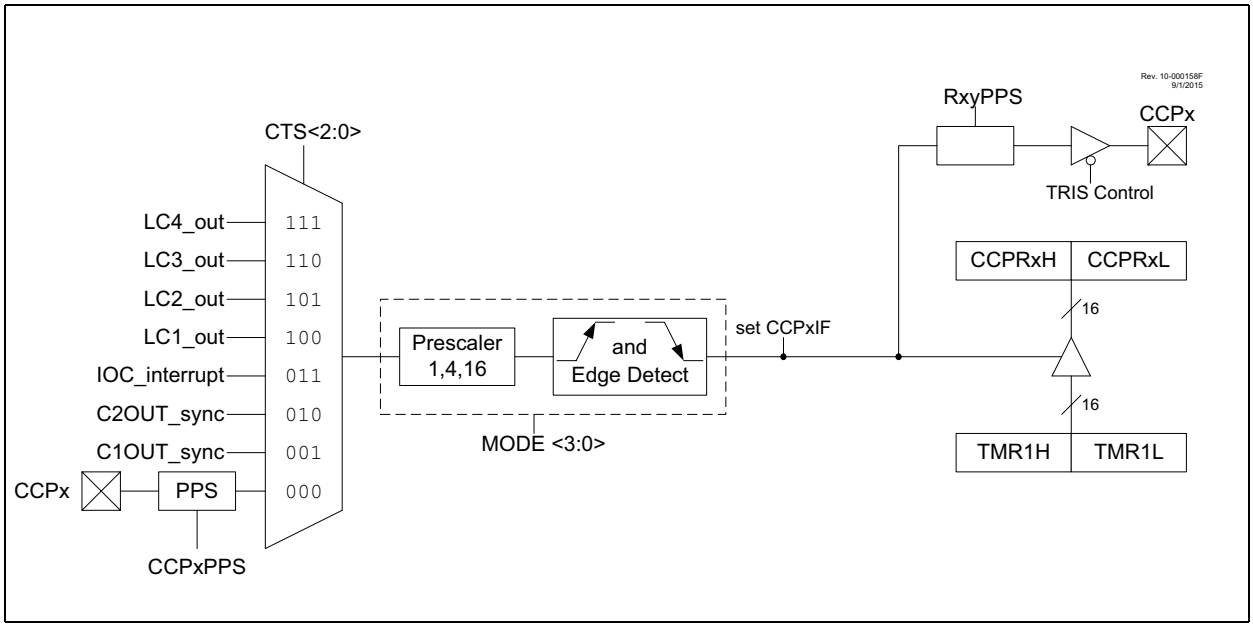

28.1.2 TIMER1 MODE RESOURCE

Timer1 must be running in Timer mode or Synchronized Counter mode for the CCP module to use the capture feature. In Asynchronous Counter mode, the capture operation may not work.

See **Section 26.0 "Timer1 Module with Gate Control"** for more information on configuring Timer1.

28.1.3 SOFTWARE INTERRUPT MODE

When the Capture mode is changed, a false capture interrupt may be generated. The user must keep the CCPxIE interrupt enable bit of the PIE6 register clear to avoid false interrupts. Additionally, the user must clear the CCPxIF interrupt flag bit of the PIR6 register following any change in Operating mode.

Note:	Clocking Timer1 from the system clock (FOSC) may not be used in Capture mode. In order for Capture mode to recognize the trigger event on the CCPx pin, Timer1 must be clocked from the instruction clock (FOSC/4).

28.1.4 CCP PRESCALER

There are four prescaler settings specified by the CCPxMODE[3:0] bits of the CCPxCON register. Whenever the CCP module is turned off, or the CCP module is not in Capture mode, the prescaler counter is cleared. Any Reset will clear the prescaler counter.

Switching from one capture prescaler to another does not clear the prescaler and may generate a false interrupt. To avoid this unexpected operation, turn the module off by clearing the CCPxCON register before changing the prescaler. Example 28-1 demonstrates the code to perform this function.

EXAMPLE 28-1: CHANGING BETWEEN CAPTURE PRESCALERS

```
BANKSEL CCPxCON     ;Set Bank bits to point
                    ;to CCPxCON
CLRF    CCPxCON     ;Turn CCP module off
MOVLW   NEW_CAPT_PS ;Load the W reg with
                    ;the new prescaler
                    ;move value and CCP ON
MOVWF   CCPxCON     ;Load CCPxCON with this
                    ;value
```

28.1.5 CAPTURE DURING SLEEP

Capture mode depends upon the Timer1 module for proper operation. There are two options for driving the Timer1 module in Capture mode. It can be driven by the instruction clock (FOSC/4), or by an external clock source.

When Timer1 is clocked by FOSC/4, Timer1 will not increment during Sleep. When the device wakes from Sleep, Timer1 will continue from its previous state.

Capture mode will operate during Sleep when Timer1 is clocked by an external clock source.

28.2 Compare Mode

Compare mode makes use of the 16-bit Timer1 resource. The 16-bit value of the CCPRxH:CCPRxL register pair is constantly compared against the 16-bit value of the TMR1H:TMR1L register pair. When a match occurs, one of the following events can occur:

- Toggle the CCPx output
- Set the CCPx output
- Clear the CCPx output
- Generate an Auto-conversion Trigger
- Generate a Software Interrupt

The action on the pin is based on the value of the CCPxMODE[3:0] control bits of the CCPxCON register. At the same time, the interrupt flag CCPxIF bit is set, and an ADC conversion can be triggered, if selected.

All Compare modes can generate an interrupt and trigger and ADC conversion.

Figure 28-2 shows a simplified diagram of the compare operation.

FIGURE 28-2: COMPARE MODE OPERATION BLOCK DIAGRAM

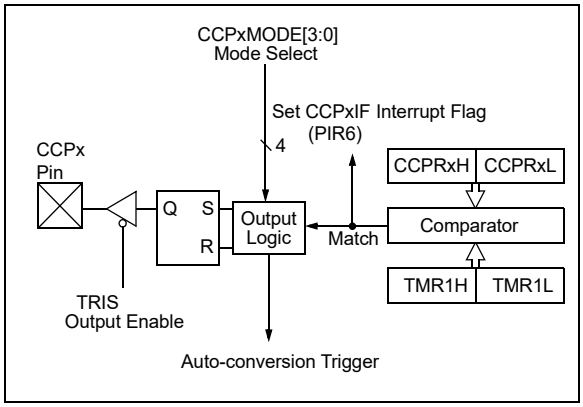

28.2.1 CCPX PIN CONFIGURATION

The software must configure the CCPx pin as an output by clearing the associated TRIS bit and defining the appropriate output pin through the RxyPPS registers. See **Section 15.0 "Peripheral Pin Select (PPS) Module"** for more details.

The CCP output can also be used as an input for other peripherals.

Note:	Clearing the CCPxCON register will force the CCPx compare output latch to the default low level. This is not the PORT I/O data latch.

28.2.2 TIMER1 MODE RESOURCE

In Compare mode, Timer1 must be running in either Timer mode or Synchronized Counter mode. The compare operation may not work in Asynchronous Counter mode.

See **Section 26.0 "Timer1 Module with Gate Control"** for more information on configuring Timer1.

Note:	Clocking Timer1 from the system clock (FOSC) may not be used in Compare mode. In order for Compare mode to recognize the trigger event on the CCPx pin, TImer1 must be clocked from the instruction clock (FOSC/4) or from an external clock source.

28.2.3 AUTO-CONVERSION TRIGGER

All CCPx modes set the CCP interrupt flag (CCPxIF). When this flag is set and a match occurs, an Auto-conversion Trigger can take place if the CCP module is selected as the conversion trigger source.

Refer to **Section 20.2.4 "Auto-Conversion Trigger"** for more information.

Note:	Removing the match condition by changing the contents of the CCPRxH and CCPRxL register pair, between the clock edge that generates the Auto-conversion Trigger and the clock edge that generates the Timer1 Reset, will preclude the Reset from occurring

28.2.4 COMPARE DURING SLEEP

Since FOSC is shut down during Sleep mode, the Compare mode will not function properly during Sleep, unless the timer is running. The device will wake on interrupt (if enabled).

28.3 PWM Overview

Pulse-Width Modulation (PWM) is a scheme that provides power to a load by switching quickly between fully on and fully off states. The PWM signal resembles a square wave where the high portion of the signal is considered the on state and the low portion of the signal is considered the off state. The high portion, also known as the pulse width, can vary in time and is defined in steps. A larger number of steps applied, which lengthens the pulse width, also supplies more power to the load. Lowering the number of steps applied, which shortens the pulse width, supplies less power. The PWM period is defined as the duration of one complete cycle or the total amount of on and off time combined.

PWM resolution defines the maximum number of steps that can be present in a single PWM period. A higher resolution allows for more precise control of the pulse width time and in turn the power that is applied to the load.

The term duty cycle describes the proportion of the on time to the off time and is expressed in percentages, where 0% is fully off and 100% is fully on. A lower duty cycle corresponds to less power applied and a higher duty cycle corresponds to more power applied.

Figure 28-3 shows a typical waveform of the PWM signal.

28.3.1 STANDARD PWM OPERATION

The standard PWM mode generates a Pulse-Width Modulation (PWM) signal on the CCPx pin with up to ten bits of resolution. The period, duty cycle, and resolution are controlled by the following registers:

- PR2 registers
- T2CON registers
- CCPRxL registers
- CCPxCON registers

Figure 28-4 shows a simplified block diagram of PWM operation.

Note:	The corresponding TRIS bit must be cleared to enable the PWM output on the CCPx pin.

FIGURE 28-3: CCP PWM OUTPUT SIGNAL

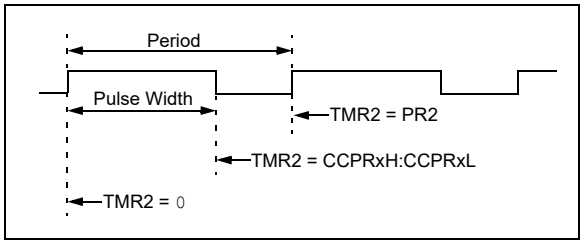

FIGURE 28-4: SIMPLIFIED PWM BLOCK DIAGRAM

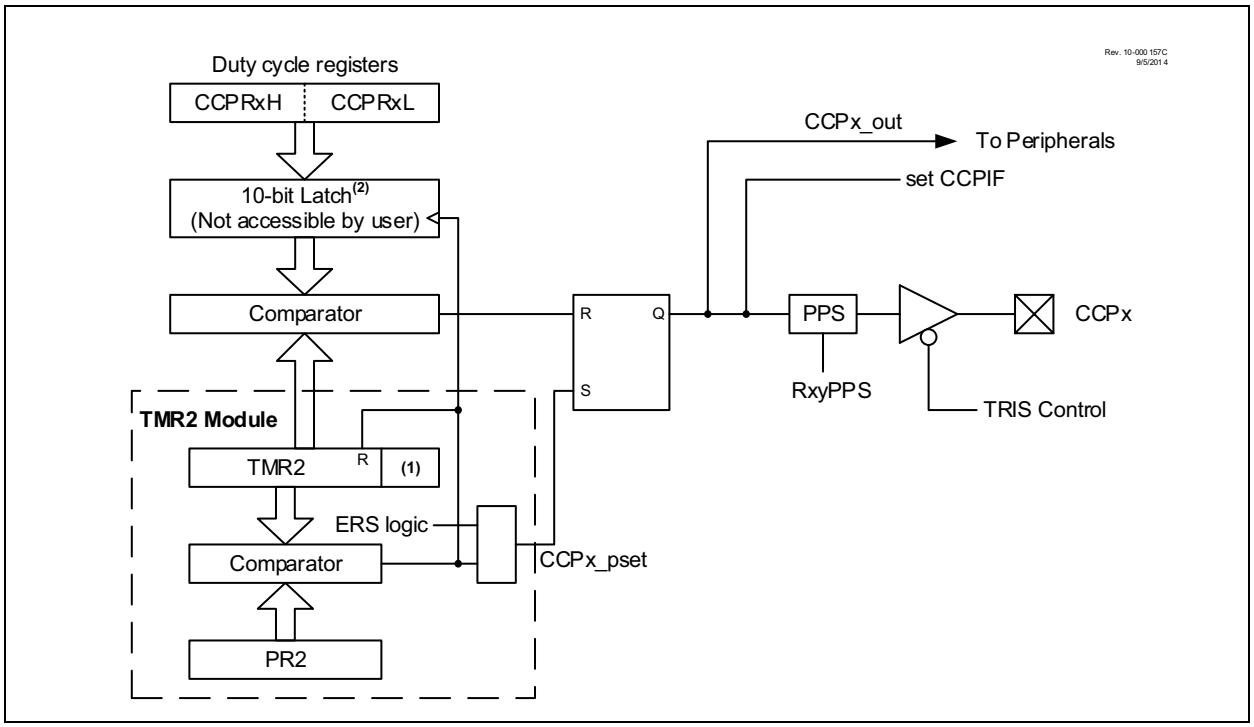

28.3.2 SETUP FOR PWM OPERATION

The following steps must be taken when configuring the CCP module for standard PWM operation:

1. Use the desired output pin RxyPPS control to select CCPx as the source and disable the CCPx pin output driver by setting the associated TRIS bit.
2. Load the PR2 register with the PWM period value.
3. Configure the CCP module for the PWM mode by loading the CCPxCON register with the appropriate values.
4. Load the CCPRxL register, and the CCPRxH register with the PWM duty cycle value and configure the CCPxFMT bit of the CCPxCON register to set the proper register alignment.
5. Configure and start Timer2:
   - Clear the TMR2IF interrupt flag bit of the PIR4 register. See Note below.
   - Configure the CKPS bits of the T2CON register with the Timer prescale value.
   - Enable the Timer by setting the Timer2 ON bit of the T2CON register.
6. Enable PWM output pin:
   - Wait until the Timer overflows and the TMR2IF bit of the PIR4 register is set. See the Note below.
   - Enable the CCPx pin output driver by clearing the associated TRIS bit

Note:	To send a complete duty cycle and period on the first PWM output, the above steps must be included in the setup sequence. If it is not critical to start with a complete PWM signal on the first output, then step 6 may be ignored.

28.3.3 CCP/PWM CLOCK SELECTION

The PIC16(L)F15324/44 allows each individual CCP and PWM module to select the timer source that controls the module. Each module has an independent selection.

28.3.4 TIMER2 TIMER RESOURCE

This device has a newer version of the Timer2 module that has many new modes, which allow for greater customization and control of the PWM signals than on older parts. Refer to **Section 27.5 "Operation Examples"** for examples of PWM signal generation using the different modes of Timer2. The CCP operation requires that the timer used as the PWM time base has the FOSC/4 clock source selected

28.3.5 PWM PERIOD

The PWM period is specified by the PR2 register of Timer2. The PWM period can be calculated using the formula of Equation 28-1.

EQUATION 28-1: PWM PERIOD

$$PWM\ Period = [(PR2) + 1] \bullet 4 \bullet T_{OSC} \bullet (TMR2\ Prescale\ Value)$$

Note 1: TOSC = 1/FOSC

When TMR2 is equal to PR2, the following three events occur on the next increment cycle:

- TMR2 is cleared
- The CCPx pin is set. (Exception: If the PWM duty cycle = 0%, the pin will not be set.)
- The PWM duty cycle is transferred from the CCPRxL/H register pair into a 10-bit buffer.

Note: The Timer postscaler (see **Section 27.4 "Timer2 Interrupt"**) is not used in the determination of the PWM frequency.

28.3.6 PWM DUTY CYCLE

The PWM duty cycle is specified by writing a 10-bit value to the CCPRxH:CCPRxL register pair. The alignment of the 10-bit value is determined by the CCPRxFMT bit of the CCPxCON register (see Figure 28-5). The CCPRxH:CCPRxL register pair can be written to at any time; however the duty cycle value is not latched into the 10-bit buffer until after a match between PR2 and TMR2.

Equation 28-2 is used to calculate the PWM pulse width.

Equation 28-3 is used to calculate the PWM duty cycle ratio.

FIGURE 28-5: PWM 10-BIT ALIGNMENT

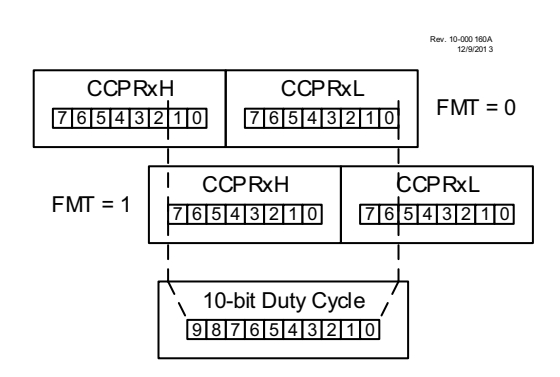

EQUATION 28-2: PULSE WIDTH

$$Pulse\ Width = (CCPRxH{:}CCPRxL\ register\ pair) \bullet T_{OSC} \bullet (TMR2\ Prescale\ Value)$$

EQUATION 28-3: DUTY CYCLE RATIO

$$Duty\ Cycle\ Ratio = \frac{(CCPRxH{:}CCPRxL\ register\ pair)}{4(PR2 + 1)}$$

CCPRxH:CCPRxL register pair are used to double buffer the PWM duty cycle. This double buffering provides for glitchless PWM operation.

The 8-bit timer TMR2 register is concatenated with either the 2-bit internal system clock (FOSC), or two bits of the prescaler, to create the 10-bit time base. The system clock is used if the Timer2 prescaler is set to 1:1.

When the 10-bit time base matches the CCPRxH:CCPRxL register pair, then the CCPx pin is cleared (see Figure 28-4).

28.3.7 PWM RESOLUTION

The resolution determines the number of available duty cycles for a given period. For example, a 10-bit resolution will result in 1024 discrete duty cycles, whereas an 8-bit resolution will result in 256 discrete duty cycles.

The maximum PWM resolution is ten bits when PR2 is 255. The resolution is a function of the PR2 register value as shown by Equation 28-4.

EQUATION 28-4: PWM RESOLUTION

$$Resolution = \frac{\log[4(PR2 + 1)]}{\log(2)}\ bits$$

Note: If the pulse width value is greater than the period the assigned PWM pin(s) will remain unchanged.

TABLE 28-2: EXAMPLE PWM FREQUENCIES AND RESOLUTIONS (FOSC = 20 MHz)

PWM Frequency	1.22 kHz	4.88 kHz	19.53 kHz	78.12 kHz	156.3 kHz	208.3 kHz
Timer Prescale	16	4	1	1	1	1
PR2 Value	0xFF	0xFF	0xFF	0x3F	0x1F	0x17
Maximum Resolution (bits)	10	10	10	8	7	6.6

TABLE 28-3: EXAMPLE PWM FREQUENCIES AND RESOLUTIONS (FOSC = 8 MHz)

PWM Frequency	1.22 kHz	4.90 kHz	19.61 kHz	76.92 kHz	153.85 kHz	200.0 kHz
Timer Prescale	16	4	1	1	1	1
PR2 Value	0x65	0x65	0x65	0x19	0x0C	0x09
Maximum Resolution (bits)	8	8	8	6	5	5

28.3.8 OPERATION IN SLEEP MODE

In Sleep mode, the TMR2 register will not increment and the state of the module will not change. If the CCPx pin is driving a value, it will continue to drive that value. When the device wakes up, TMR2 will continue from its previous state.

28.3.9 CHANGES IN SYSTEM CLOCK FREQUENCY

The PWM frequency is derived from the system clock frequency. Any changes in the system clock frequency will result in changes to the PWM frequency. See **Section 9.0 “Oscillator Module (with Fail-Safe Clock Monitor)”** for additional details.

28.3.10 EFFECTS OF RESET

Any Reset will force all ports to Input mode and the CCP registers to their Reset states.

28.4 Register Definitions: CCP Control

Long bit name prefixes for the CCP peripherals are shown in **Section 1.1 "Register and Bit Naming Conventions"**.

TABLE 28-4: LONG BIT NAMES PREFIXES FOR CCP PERIPHERALS

Peripheral	Bit Name Prefix
CCP1	CCP1
CCP2	CCP2

REGISTER 28-1: CCPxCON: CCPx CONTROL REGISTER

R/W-0/0	U-0	R-x	R/W-0/0	R/W-0/0	R/W-0/0	R/W-0/0	R/W-0/0
EN	—	OUT	FMT	MODE[3:0]			
bit 7							bit 0

Legend:		
R = Readable bit	W = Writable bit	U = Unimplemented bit, read as '0'
u = Bit is unchanged	x = Bit is unknown	-n/n = Value at POR and BOR/Value at all other Reset
'1' = Bit is set	'0' = Bit is cleared	

bit 7 **EN:** CCPx Module Enable bit
1 = CCPx is enabled
0 = CCPx is disabled

bit 6 **Unimplemented:** Read as '0'

bit 5 **OUT:** CCPx Output Data bit (read-only)

bit 4 **FMT:** CCPW (Pulse Width) Alignment bit
MODE = Capture mode
Unused
MODE = Compare mode
Unused
MODE = PWM mode
1 = Left-aligned format
0 = Right-aligned format

REGISTER 28-1: CCPxCON: CCPx CONTROL REGISTER (CONTINUED)

bit 3-0 **MODE[3:0]:** CCPx Mode Select bits[(1)]

`1111` - `1100` = PWM mode (Timer2 as the timer source)
`1110` = Reserved
`1101` = Reserved
`1100` = Reserved

`1011` = Compare mode: output will pulse 0-1-0; Clears TMR1
`1010` = Compare mode: output will pulse 0-1-0
`1001` = Compare mode: clear output on compare match
`1000` = Compare mode: set output on compare match

`0111` = Capture mode: every 16th rising edge of CCPx input
`0110` = Capture mode: every 4th rising edge of CCPx input
`0101` = Capture mode: every rising edge of CCPx input
`0100` = Capture mode: every falling edge of CCPx input

`0011` = Capture mode: every edge of CCPx input
`0010` = Compare mode: toggle output on match
`0001` = Compare mode: toggle output on match; clear TMR1
`0000` = Capture/Compare/PWM off (resets CCPx module)

Note 1: All modes will set the CCPxIF bit, and will trigger an ADC conversion if CCPx is selected as the ADC trigger source.

REGISTER 28-2: CCPxCAP: CAPTURE INPUT SELECTION REGISTER

U-0	U-0	U-0	U-0	U-0	R/W-0/x	R/W-0/x	R/W-0/x
—	—	—	—	—	CTS[2:0]		
bit 7							bit 0

Legend:		
R = Readable bit	W = Writable bit	U = Unimplemented bit, read as ‘0’
u = Bit is unchanged	x = Bit is unknown	-n/n = Value at POR and BOR/Value at all other Reset
‘1’ = Bit is set	‘0’ = Bit is cleared	

bit 7-3 **Unimplemented:** Read as ‘0’

bit 2-0 **CTS[2:0]:** Capture Trigger Input Selection bits

CTS	CCP1.capture	CCP2.capture
111	LC4_out	
110	LC3_out	
101	LC2_out	
100	LC1_out	
011	IOC_interrupt	
010	C2OUT	
001	C1OUT	
000	CCP1PPS	CCP2PPS

REGISTER 28-3: CCPRxL REGISTER: CCPx REGISTER LOW BYTE

R/W-x/x	R/W-x/x	R/W-x/x	R/W-x/x	R/W-x/x	R/W-x/x	R/W-x/x	R/W-x/x
CCPRx[7:0]							
bit 7							bit 0

Legend:		
R = Readable bit	W = Writable bit	U = Unimplemented bit, read as ‘0’
u = Bit is unchanged	x = Bit is unknown	-n/n = Value at POR and BOR/Value at all other Reset
‘1’ = Bit is set	‘0’ = Bit is cleared	

bit 7-0 CCPxMODE = Capture mode
CCPRxL[7:0]: Capture value of TMR1L
CCPxMODE = Compare mode
CCPRxL[7:0]: LS Byte compared to TMR1L
CCPxMODE = PWM modes when CCPxFMT = 0:
CCPRxL[7:0]: Pulse-width Least Significant eight bits
CCPxMODE = PWM modes when CCPxFMT = 1:
CCPRxL[7:6]: Pulse-width Least Significant two bits
CCPRxL[5:0]: Not used.

REGISTER 28-4: CCPRxH REGISTER: CCPx REGISTER HIGH BYTE

R/W-x/x	R/W-x/x	R/W-x/x	R/W-x/x	R/W-x/x	R/W-x/x	R/W-x/x	R/W-x/x
CCPRx[15:8]							
bit 7							bit 0

Legend:		
R = Readable bit	W = Writable bit	U = Unimplemented bit, read as ‘0’
u = Bit is unchanged	x = Bit is unknown	-n/n = Value at POR and BOR/Value at all other Reset
‘1’ = Bit is set	‘0’ = Bit is cleared	

bit 7-0 CCPxMODE = Capture mode
CCPRxH[7:0]: Captured value of TMR1H
CCPxMODE = Compare mode
CCPRxH[7:0]: MS Byte compared to TMR1H
CCPxMODE = PWM modes when CCPxFMT = 0:
CCPRxH[7:2]: Not used
CCPRxH[1:0]: Pulse-width Most Significant two bits
CCPxMODE = PWM modes when CCPxFMT = 1:
CCPRxH[7:0]: Pulse-width Most Significant eight bits

TABLE 28-5: SUMMARY OF REGISTERS ASSOCIATED WITH CCPx

Name	Bit 7	Bit 6	Bit 5	Bit 4	Bit 3	Bit 2	Bit 1	Bit 0	Register on Page
INTCON	GIE	PEIE	—	—	—	—	—	INTEDG	125
PIR4	—	—	—	—	—	—	TMR2IF	TMR1IF	138
PIE4	—	—	—	—	—	—	TMR2IE	TMR1IE	130
CCP1CON	EN	—	OUT	FMT	MODE[3:0]				322
CCP1CAP	—	—	—	—	—	CTS[2:0]			324
CCPR1L	Capture/Compare/PWM Register 1 (LSB)								324
CCPR1H	Capture/Compare/PWM Register 1 (MSB)								325
CCP2CON	EN	—	OUT	FMT	MODE[3:0]				322
CCP2CAP	—	—	—	—	—	CTS[2:0]			324
CCPR2L	Capture/Compare/PWM Register 1 (LSB)								324
CCPR2H	Capture/Compare/PWM Register 1 (MSB)								324
CCP1PPS	—	—	CCP1PPS[5:0]						200
CCP2PPS	—	—	CCP2PPS[5:0]						200
RxyPPS	—	—	—	RxyPPS[4:0]					201
ADACT	—	—	—	—	ADACT[3:0]				236
CLCxSELy	—	—	—	LCxDyS[4:0]					368
CWG1DAT	—	—	—	—	DAT[3:0]				357

Legend: — = Unimplemented location, read as '0'. Shaded cells are not used by the CCP module.

29.0 PULSE-WIDTH MODULATION (PWM)

The PWMx modules generate Pulse-Width Modulated (PWM) signals of varying frequency and duty cycle.

In addition to the CCP modules, the PIC16(L)F15324/44 devices contain four 10-bit PWM modules (PWM3, PWM4, PWM5 and PWM6). The PWM modules reproduce the PWM capability of the CCP modules.

> **Note:** The PWM3/4/5/6 modules are four instances of the same PWM module design. Throughout this section, the lower case 'x' in register and bit names is a generic reference to the PWM module number (which may be substituted with 3, or 4, or, 5 or 6 during code development). For example, the control register is generically described in this chapter as PWMxCON, but the actual device registers are PWM3CON, PWM4CON, PWM5CON and PWM6CON. Similarly, the PWMxEN bit represents the PWM3EN, PWM4EN, PWM5EN and PWM6EN bits.

Pulse-Width Modulation (PWM) is a scheme that provides power to a load by switching quickly between fully on and fully off states. The PWM signal resembles a square wave where the high portion of the signal is considered the 'on' state (pulse width), and the low portion of the signal is considered the 'off' state. The term duty cycle describes the proportion of the 'on' time to the 'off' time and is expressed in percentages, where 0% is fully off and 100% is fully on. A lower duty cycle corresponds to less power applied and a higher duty cycle corresponds to more power applied. The PWM period is defined as the duration of one complete cycle or the total amount of on and off time combined.

PWM resolution defines the maximum number of steps that can be present in a single PWM period. A higher resolution allows for more precise control of the pulse width time and, in turn, the power that is applied to the load.

Figure 29-1 shows a typical waveform of the PWM signal.

FIGURE 29-1: PWM OUTPUT

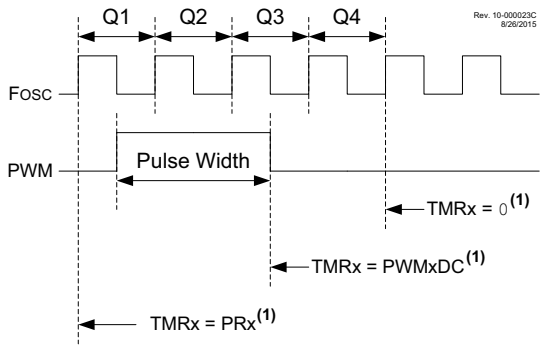

Note 1: Timer dependent on PWMTMRS register settings.

29.1 Standard PWM Mode

The standard PWM mode generates a Pulse-Width Modulation (PWM) signal on the PWMx pin with up to ten bits of resolution. The period, duty cycle, and resolution are controlled by the following registers:

- TMR2 register
- PR2 register
- PWMxCON registers
- PWMxDCH registers
- PWMxDCL registers

Figure 29-2 shows a simplified block diagram of PWM operation.

If PWMPOL = 0, the default state of the output is '0'. If PWMPOL = 1, the default state is '1'. If PWMEN = 0, the output will be the default state.

Note:	The corresponding TRIS bit must be cleared to enable the PWM output on the PWMx pin

FIGURE 29-2: SIMPLIFIED PWM BLOCK DIAGRAM

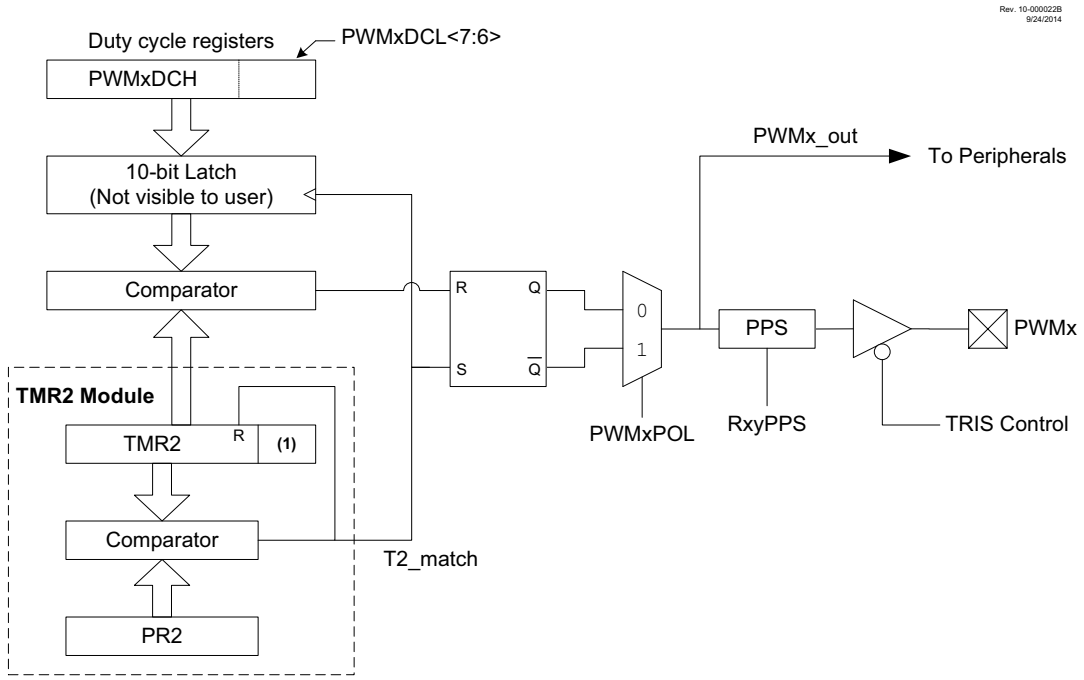

Note 1: 8-bit timer is concatenated with two bits generated by Fosc or two bits of the internal prescaler to create 10-bit time-base.

29.1.1 PWM CLOCK SELECTION

The PIC16(L)F15324/44 allows each individual CCP and PWM module to select the timer source that controls the module. Each module has an independent selection.

29.1.2 USING THE TMR2 WITH THE PWM MODULE

This device has a newer version of the TMR2 module that has many new modes, which allow for greater customization and control of the PWM signals than on older parts. Refer to **Section 27.5 "Operation Examples"** for examples of PWM signal generation using the different modes of Timer2.

Note:	PWM operation requires that the timer used as the PWM time base has the FOSC/4 clock source selected.

29.1.3 PWM PERIOD

Referring to Figure 29-1, the PWM output has a period and a pulse width. The frequency of the PWM is the inverse of the period (1/period).

The PWM period is specified by writing to the PR2 register. The PWM period can be calculated using the following formula:

EQUATION 29-1: PWM PERIOD

$$PWM\ Period = [(PR2) + 1] \cdot 4 \cdot TOSC \cdot (TMR2\ Prescale\ Value)$$

Note 1: TOSC = 1/FOSC

When TMR2 is equal to PR2, the following three events occur on the next increment cycle:

- TMR2 is cleared
- The PWMx pin is set (Exception: If the PWM duty cycle = 0%, the pin will not be set.)
- The PWM pulse width is latched from PWMxDC.

Note:	If the pulse width value is greater than the period the assigned PWM pin(s) will remain unchanged.

29.1.4 PWM DUTY CYCLE

The PWM duty cycle is specified by writing a 10-bit value to the PWMxDC register. The PWMxDCH contains the eight MSbs and the PWMxDCL[7:6] bits contain the two LSbs.

The PWMDC register is double-buffered and can be updated at any time. This double buffering is essential for glitch-free PWM operation. New values take effect when TMR2 = PR2. Note that PWMDC is left-justified.

The 8-bit timer TMR2 register is concatenated with either the 2-bit internal system clock (FOSC), or two bits of the prescaler, to create the 10-bit time base. The system clock is used if the Timer2 prescaler is set to 1:1.

Equation 29-2 is used to calculate the PWM pulse width.

Equation 29-3 is used to calculate the PWM duty cycle ratio.

EQUATION 29-2: PULSE WIDTH

$$Pulse\ Width = (PWMxDC) \cdot TOSC \cdot (TMR2\ Prescale\ Value)$$

EQUATION 29-3: DUTY CYCLE RATIO

$$Duty\ Cycle\ Ratio = \frac{(PWMxDC)}{4(PR2 + 1)}$$

29.1.5 PWM RESOLUTION

The resolution determines the number of available duty cycles for a given period. For example, a 10-bit resolution will result in 1024 discrete duty cycles, whereas an 8-bit resolution will result in 256 discrete duty cycles.

The maximum PWM resolution is ten bits when PR2 is 255. The resolution is a function of the PR2 register value as shown by Equation 29-4.

EQUATION 29-4: PWM RESOLUTION

$$Resolution = \frac{\log[4(PR2 + 1)]}{\log(2)}\ bits$$

29.1.6 OPERATION IN SLEEP MODE

In Sleep mode, the TMR2 register will not increment and the state of the module will not change. If the PWMx pin is driving a value, it will continue to drive that value. When the device wakes up, TMR2 will continue from its previous state.

29.1.7 CHANGES IN SYSTEM CLOCK FREQUENCY

The PWM frequency is derived from the system clock frequency. Any changes in the system clock frequency will result in changes to the PWM frequency. See **Section 9.0 "Oscillator Module (with Fail-Safe Clock Monitor)"** for additional details.

29.1.8 EFFECTS OF RESET

Any Reset will force all ports to Input mode and the PWMx registers to their Reset states.

TABLE 29-1: EXAMPLE PWM FREQUENCIES AND RESOLUTIONS (FOSC = 20 MHz)

PWM Frequency	1.22 kHz	4.88 kHz	19.53 kHz	78.12 kHz	156.3 kHz	208.3 kHz
Timer Prescale	16	4	1	1	1	1
PR2 Value	0xFF	0xFF	0xFF	0x3F	0x1F	0x17
Maximum Resolution (bits)	10	10	10	8	7	6.6

TABLE 29-2: EXAMPLE PWM FREQUENCIES AND RESOLUTIONS (FOSC = 8 MHz)

PWM Frequency	1.22 kHz	4.90 kHz	19.61 kHz	76.92 kHz	153.85 kHz	200.0 kHz
Timer Prescale	16	4	1	1	1	1
PR2 Value	0x65	0x65	0x65	0x19	0x0C	0x09
Maximum Resolution (bits)	8	8	8	6	5	5

29.1.9 SETUP FOR PWM OPERATION

The following steps must be taken when configuring the module for using the PWMx outputs:

1. Disable the PWMx pin output driver(s) by setting the associated TRIS bit(s).
2. Configure the PWM output polarity by configuring the PWMxPOL bit of the PWMxCON register.
3. Load the PR2 register with the PWM period value, as determined by Equation 29-1.
4. Load the PWMxDCH register and bits [7:6] of the PWMxDCL register with the PWM duty cycle value, as determined by Equation 29-2.
5. Configure and start Timer2:
   - Clear the TMR2IF interrupt flag bit of the PIR4 register.
   - Select the Timer2 prescale value by configuring the CKPS[2:0] bits of the T2CON register.
   - Enable Timer2 by setting the Timer2 ON bit of the T2CON register.
6. Wait until the TMR2IF is set.
7. When the TMR2IF flag bit is set:
   - Clear the associated TRIS bit(s) to enable the output driver
   - Route the signal to the desired pin by configuring the RxyPPS register
   - Enable the PWMx module by setting the PWMxEN bit of the PWMxCON register

To send a complete duty cycle and period on the first PWM output, the above steps must be followed in the order given. If it is not critical to start with a complete PWM signal, then the PWM module can be enabled during Step 2 by setting the PWMxEN bit of the PWMxCON register.

29.2 Register Definitions: PWM Control

REGISTER 29-1: PWMxCON: PWM CONTROL REGISTER

R/W-0/0	U-0	R-0	R/W-0/0	U-0	U-0	U-0	U-0
PWMxEN	—	PWMxOUT	PWMxPOL	—	—	—	—
bit 7							bit 0

Legend:		
R = Readable bit	W = Writable bit	U = Unimplemented bit, read as ‘0’
u = Bit is unchanged	x = Bit is unknown	-n/n = Value at POR and BOR/Value at all other Resets
‘1’ = Bit is set	‘0’ = Bit is cleared	

bit 7 **PWMxEN:** PWM Module Enable bit
1 = PWM module is enabled
0 = PWM module is disabled

bit 6 **Unimplemented:** Read as ‘0’

bit 5 **PWMxOUT:** PWM Module Output Level when Bit is Read

bit 4 **PWMxPOL:** PWMx Output Polarity Select bit
1 = PWM output is active-low
0 = PWM output is active-high

bit 3-0 **Unimplemented:** Read as ‘0’

REGISTER 29-2: PWMxDCH: PWM DUTY CYCLE HIGH BITS

R/W-x/u	R/W-x/u	R/W-x/u	R/W-x/u	R/W-x/u	R/W-x/u	R/W-x/u	R/W-x/u
PWMxDC[9:2]							
bit 7							bit 0

Legend:		
R = Readable bit	W = Writable bit	U = Unimplemented bit, read as ‘0’
u = Bit is unchanged	x = Bit is unknown	-n/n = Value at POR and BOR/Value at all other Resets
‘1’ = Bit is set	‘0’ = Bit is cleared	

bit 7-0 **PWMxDC[9:2]:** PWM Duty Cycle Most Significant bits
These bits are the MSbs of the PWM duty cycle. The two LSbs are found in PWMxDCL Register.

REGISTER 29-3: PWMxDCL: PWM DUTY CYCLE LOW BITS

R/W-x/u	R/W-x/u	U-0	U-0	U-0	U-0	U-0	U-0
PWMxDC[1:0]		—	—	—	—	—	—
bit 7							bit 0

Legend:		
R = Readable bit	W = Writable bit	U = Unimplemented bit, read as ‘0’
u = Bit is unchanged	x = Bit is unknown	-n/n = Value at POR and BOR/Value at all other Resets
‘1’ = Bit is set	‘0’ = Bit is cleared	

bit 7-6 **PWMxDC[1:0]:** PWM Duty Cycle Least Significant bits
These bits are the LSbs of the PWM duty cycle. The MSbs are found in PWMxDCH Register.

bit 5-0 **Unimplemented:** Read as ‘0’

TABLE 29-3: SUMMARY OF REGISTERS ASSOCIATED WITH PWMx

Name	Bit 7	Bit 6	Bit 5	Bit 4	Bit 3	Bit 2	Bit 1	Bit 0	Register on Page
T2CON	ON	CKPS[2:0]			OUTPS[3:0]				311
T2TMR	Holding Register for the 8-bit TMR2 Register								291*
T2PR	TMR2 Period Register								291*
RxyPPS	—	—	—	RxyPPS[4:0]					201
CWG1DAT	—	—	—	—	DAT[3:0]				357
CLCxSELy	—	—	LCxDyS[5:0]						368
TRISA	—	—	TRISA5	TRISA4	—	TRISA2	TRISA1	TRISA0	179
TRISC	TRISC7(1)	TRISC6(1)	TRISC5	TRISC4	TRISC3	TRISC2	TRISC1	TRISC0	190

Legend: – = Unimplemented locations, read as '0'. Shaded cells are not used by the PWMx module.
* Page with Register information.

Note 1: Present on PIC16(L)F15344 only.

30.0 COMPLEMENTARY WAVEFORM GENERATOR (CWG) MODULE

The Complementary Waveform Generator (CWG) produces half-bridge, full-bridge, and steering of PWM waveforms. It is backwards compatible with previous ECCP functions.

The CWG has the following features:

- Six operating modes:
  - Synchronous Steering mode
  - Asynchronous Steering mode
  - Full-Bridge mode, Forward
  - Full-Bridge mode, Reverse
  - Half-Bridge mode
  - Push-Pull mode
- Output polarity control
- Output steering
  - Synchronized to rising event
  - Immediate effect
- Independent 6-bit rising and falling event dead-band timers
  - Clocked dead band
  - Independent rising and falling dead-band enables
- Auto-shutdown control with:
  - Selectable shutdown sources
  - Auto-restart enable
  - Auto-shutdown pin override control

The CWG modules available are shown in Table 30-1.

TABLE 30-1: AVAILABLE CWG MODULES

Device	CWG1
PIC16(L)F15324/44	●

30.1 Fundamental Operation

The CWG module can operate in six different modes, as specified by MODE of the CWG1CON0 register:

- Half-Bridge mode (Figure 30-9)
- Push-Pull mode (Figure 30-2)
  - Full-Bridge mode, Forward (Figure 30-3)
  - Full-Bridge mode, Reverse (Figure 30-3)
- Steering mode (Figure 30-10)
- Synchronous Steering mode (Figure 30-11)

It may be necessary to guard against the possibility of circuit faults or a feedback event arriving too late or not at all. In this case, the active drive must be terminated before the Fault condition causes damage. Thus, all output modes support auto-shutdown, which is covered in **30.10 “Auto-Shutdown”**.

30.1.1 HALF-BRIDGE MODE

In Half-Bridge mode, two output signals are generated as true and inverted versions of the input as illustrated in Figure 30-9. A non-overlap (dead-band) time is inserted between the two outputs as described in **Section 30.5 “Dead-Band Control”**.

The unused outputs CWG1C and CWG1D drive similar signals, with polarity independently controlled by the POLC and POLD bits of the CWG1CON1 register, respectively.

FIGURE 30-1: SIMPLIFIED CWG BLOCK DIAGRAM (HALF-BRIDGE MODE)

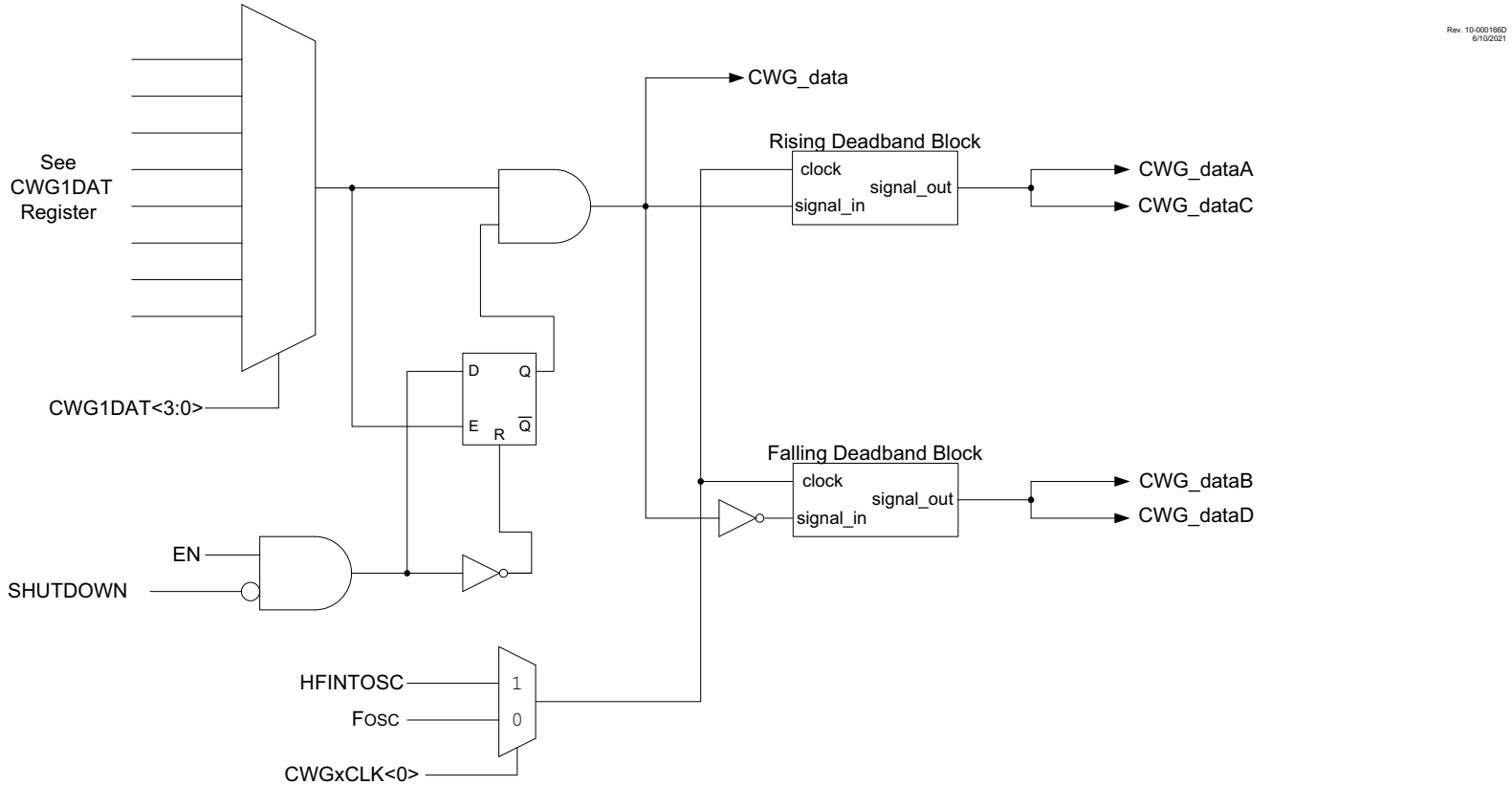

© 2017-2021 Microchip Technology Inc.

30.1.2 PUSH-PULL MODE

In Push-Pull mode, two output signals are generated, alternating copies of the input as illustrated in Figure 30-2. This alternation creates the push-pull effect required for driving some transformer-based power supply designs.

The push-pull sequencer is reset whenever EN = 0 or if an auto-shutdown event occurs. The sequencer is clocked by the first input pulse, and the first output appears on CWG1A.

The unused outputs CWG1C and CWG1D drive copies of CWG1A and CWG1B, respectively, but with polarity controlled by the POLC and POLD bits of the CWG1CON1 register, respectively.

30.1.3 FULL-BRIDGE MODES

In Forward and Reverse Full-Bridge modes, three outputs drive static values while the fourth is modulated by the input data signal. In Forward Full-Bridge mode, CWG1A is driven to its active state, CWG1B and CWG1C are driven to their inactive state, and CWG1D is modulated by the input signal. In Reverse Full-Bridge mode, CWG1C is driven to its active state, CWG1A and CWG1D are driven to their inactive states, and CWG1B is modulated by the input signal. In Full-Bridge mode, the dead-band period is used when there is a switch from forward to reverse or vice-versa. This dead-band control is described in **Section 30.5 “Dead-Band Control”**, with additional details in **Section 30.6 “Rising Edge and Reverse Dead Band”** and **Section 30.7 “Falling Edge and Forward Dead Band”**.

The mode selection may be toggled between forward and reverse toggling the MODE[0] bit of the CWG1CON0 while keeping MODE[2:1] static, without disabling the CWG module.

FIGURE 30-2: SIMPLIFIED CWG BLOCK DIAGRAM (PUSH-PULL MODE)

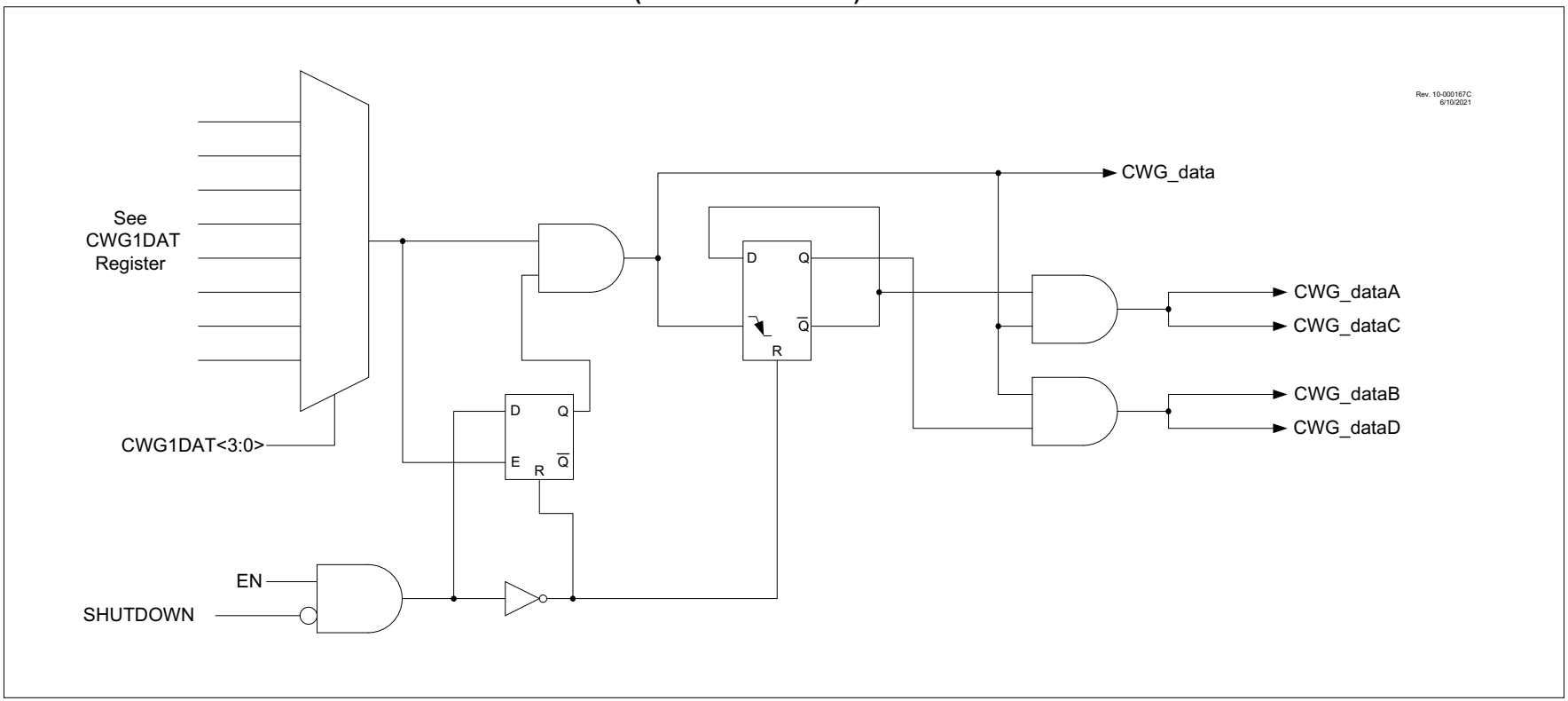

© 2017-2021 Microchip Technology Inc.

FIGURE 30-3: SIMPLIFIED CWG BLOCK DIAGRAM (FORWARD AND REVERSE FULL-BRIDGE MODES)

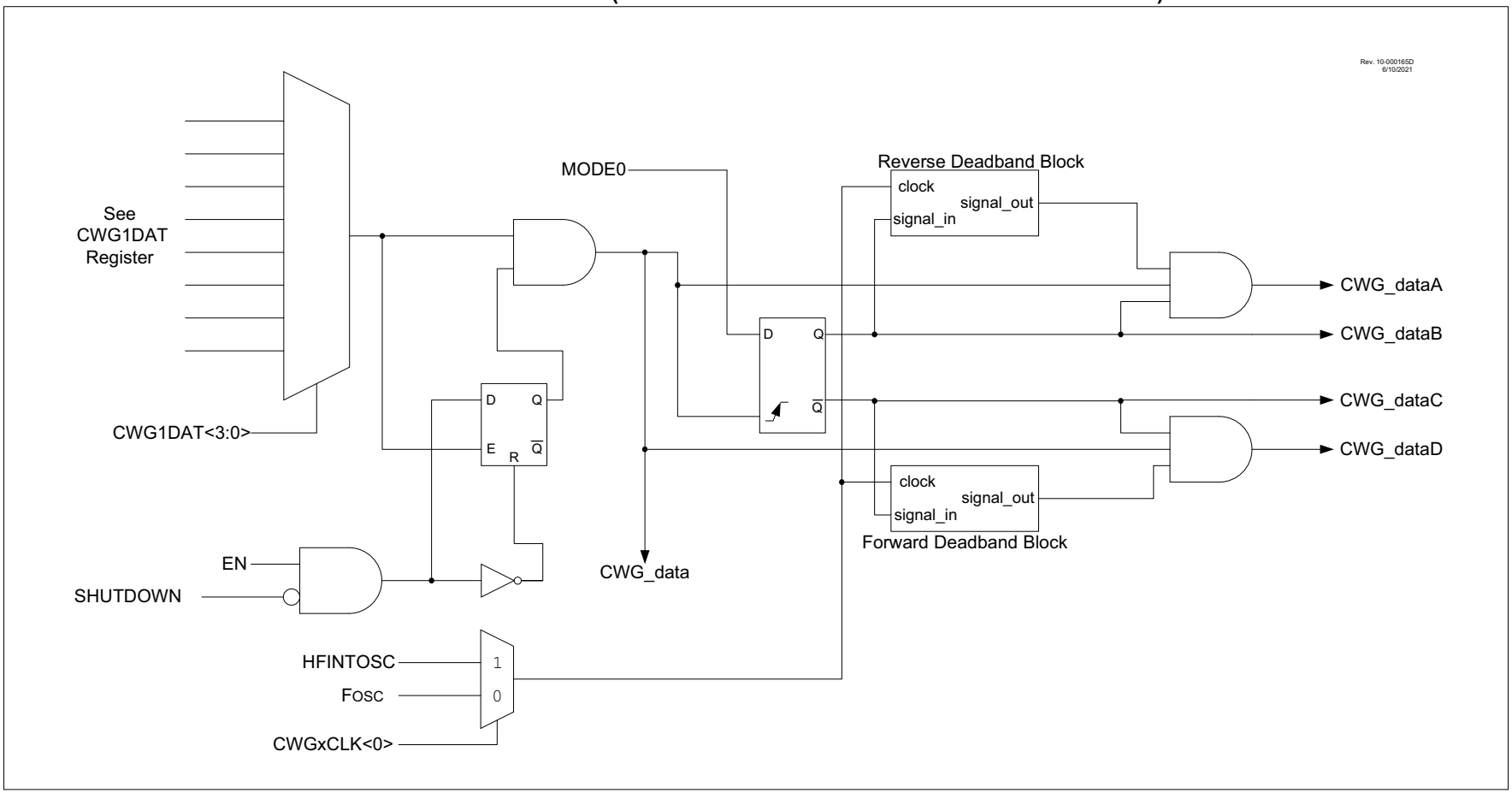

30.1.4 STEERING MODES

In Steering modes, the data input can be steered to any or all of the four CWG output pins. In Synchronous Steering mode, changes to steering selection registers take effect on the next rising input.

In Nonsynchronous mode, steering takes effect on the next instruction cycle. Additional details are provided in **Section 30.9 "CWG Steering Mode"**.

FIGURE 30-4: SIMPLIFIED CWG BLOCK DIAGRAM (OUTPUT STEERING MODES)

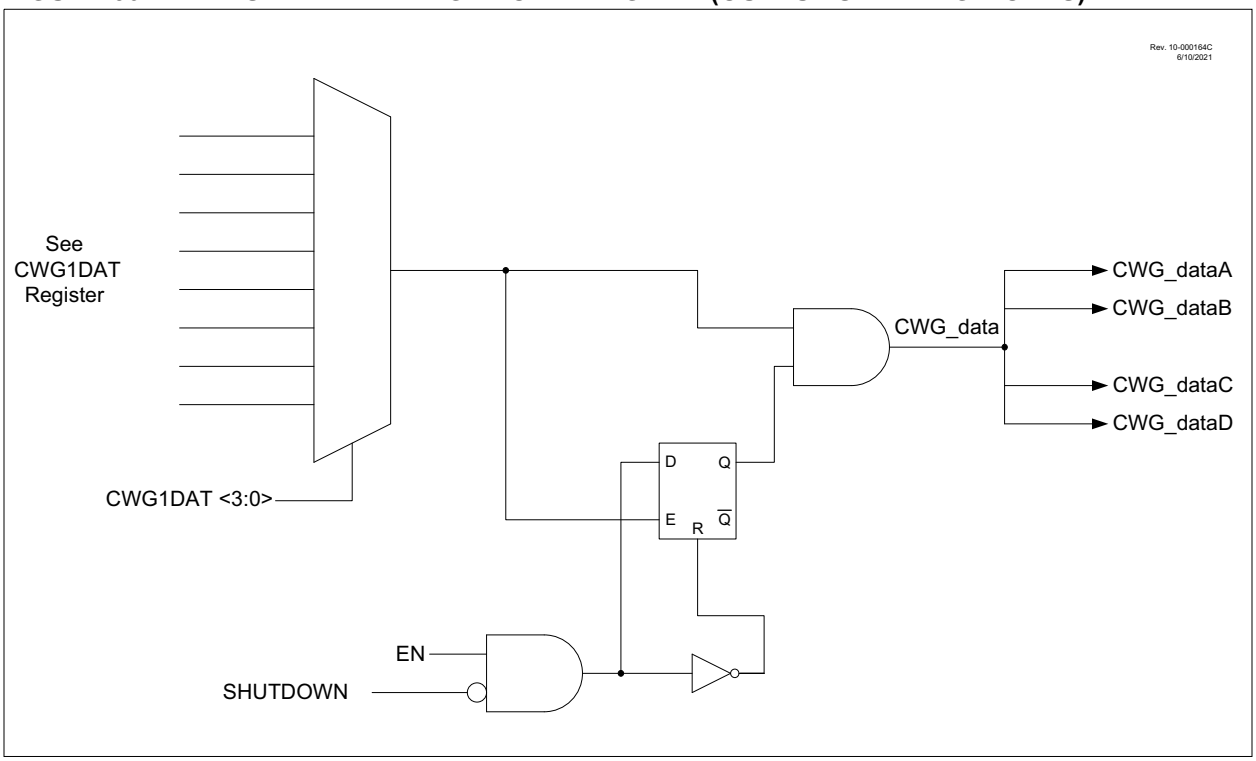

30.2 Clock Source

The CWG module allows the following clock sources to be selected:

- Fosc (system clock)
- HFINTOSC (16 MHz only)

The clock sources are selected using the CS bit of the CWG1CLKCON register.

30.3 Selectable Input Sources

The CWG generates the output waveforms from the input sources in Table 30-2.

TABLE 30-2: SELECTABLE INPUT SOURCES

Source Peripheral	Signal Name
CWG input PPS pin	CWG1IN PPS
CCP1	CCP1_out
CCP2	CCP2_out
PWM3	PWM3_out
PWM4	PWM4_out
PWM5	PWM5_out
PWM6	PWM6_out
NCO	NCO1_out
Comparator C1	C1OUT_sync
Comparator C2	C2OUT_sync
CLC1	LC1_out
CLC2	LC2_out
CLC3	LC3_out
CLC4	LC4_out

The input sources are selected using the CWG1DAT register.

30.4 Output Control

30.4.1 POLARITY CONTROL

The polarity of each CWG output can be selected independently. When the output polarity bit is set, the corresponding output is active-high. Clearing the output polarity bit configures the corresponding output as active-low. However, polarity does not affect the override levels. Output polarity is selected with the POLx bits of the CWG1CON1. Auto-shutdown and steering options are unaffected by polarity.

FIGURE 30-5: CWG OUTPUT BLOCK DIAGRAM

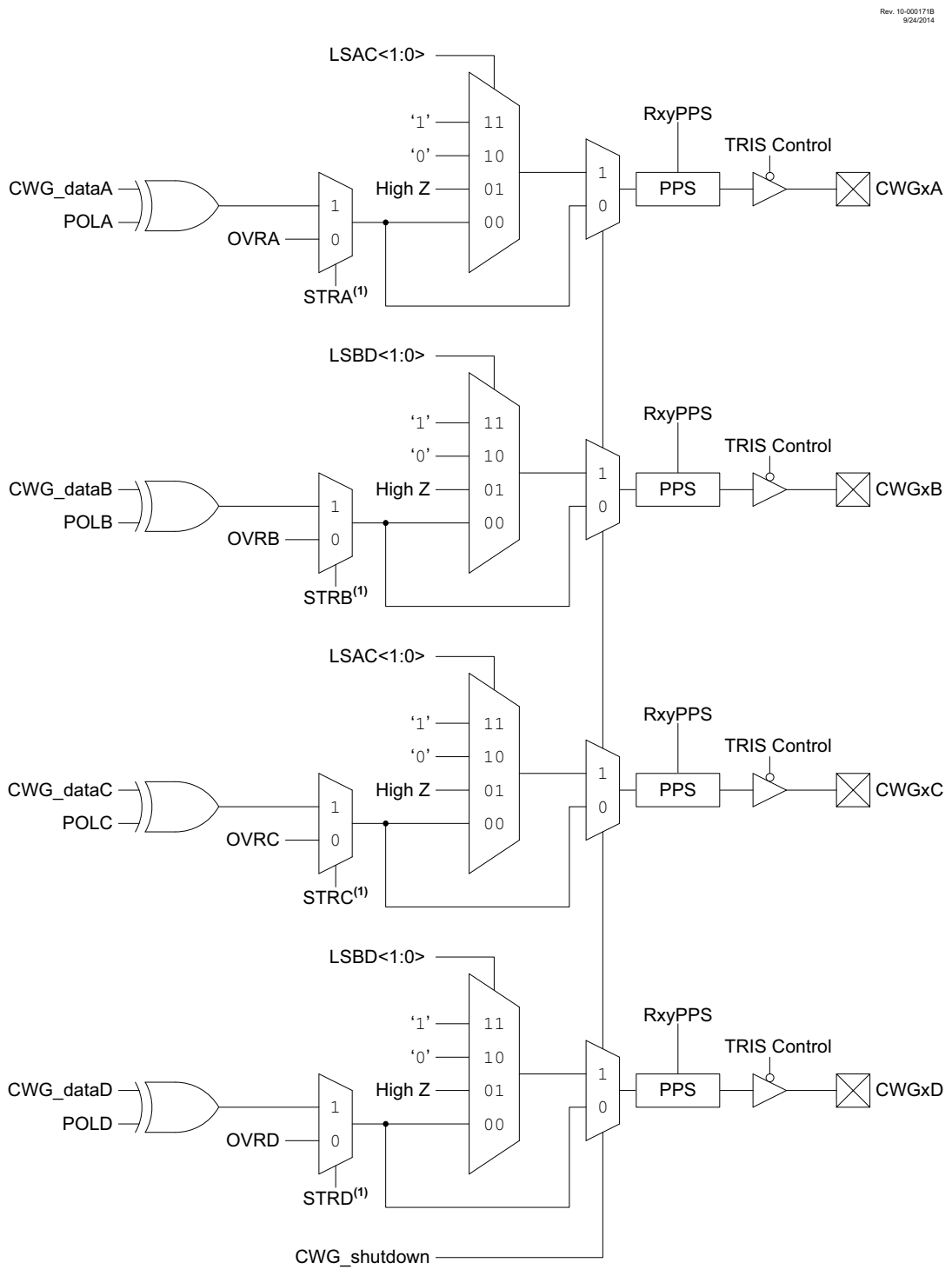

Note 1: STRx is held to 1 in all modes other than Output Steering Mode.

30.5 Dead-Band Control

The dead-band control provides non-overlapping PWM signals to prevent shoot-through current in PWM switches. Dead-band operation is employed for Half-Bridge and Full-Bridge modes. The CWG contains two 6-bit dead-band counters. One is used for the rising edge of the input source control in Half-Bridge mode or for reverse dead-band Full-Bridge mode. The other is used for the falling edge of the input source control in Half-Bridge mode or for forward dead band in Full-Bridge mode.

Dead band is timed by counting CWG clock periods from zero up to the value in the rising or falling dead-band counter registers. See CWG1DBR and CWG1DBF registers, respectively.

30.5.1 DEAD-BAND FUNCTIONALITY IN HALF-BRIDGE MODE

In Half-Bridge mode, the dead-band counters dictate the delay between the falling edge of the normal output and the rising edge of the inverted output. This can be seen in Figure 30-9.

30.5.2 DEAD-BAND FUNCTIONALITY IN FULL-BRIDGE MODE

In Full-Bridge mode, the dead-band counters are used when undergoing a direction change. The MODE[0] bit of the CWG1CON0 register can be set or cleared while the CWG is running, allowing for changes from Forward to Reverse mode. The CWG1A and CWG1C signals will change upon the first rising input edge following a direction change, but the modulated signals (CWG1B or CWG1D, depending on the direction of the change) will experience a delay dictated by the dead-band counters. This is demonstrated in Figure 30-3.

30.6 Rising Edge and Reverse Dead Band

CWG1DBR controls the rising edge dead-band time at the leading edge of CWG1A (Half-Bridge mode) or the leading edge of CWG1B (Full-Bridge mode). The CWG1DBR value is double-buffered. When EN = 0, the CWG1DBR register is loaded immediately when CWG1DBR is written. When EN = 1, then software must set the LD bit of the CWG1CON0 register, and the buffer will be loaded at the next falling edge of the CWG input signal. If the input source signal is not present for enough time for the count to be completed, no output will be seen on the respective output.

30.7 Falling Edge and Forward Dead Band

CWG1DBF controls the dead-band time at the leading edge of CWG1B (Half-Bridge mode) or the leading edge of CWG1D (Full-Bridge mode). The CWG1DBF value is double-buffered. When EN = 0, the CWG1DBF register is loaded immediately when CWG1DBF is written. When EN = 1 then software must set the LD bit of the CWG1CON0 register, and the buffer will be loaded at the next falling edge of the CWG input signal. If the input source signal is not present for enough time for the count to be completed, no output will be seen on the respective output.

Refer to Figure 30-6 and Figure 30-7 for examples.

FIGURE 30-6: DEAD-BAND OPERATION CWG1DBR = 0X01, CWG1DBF = 0X02

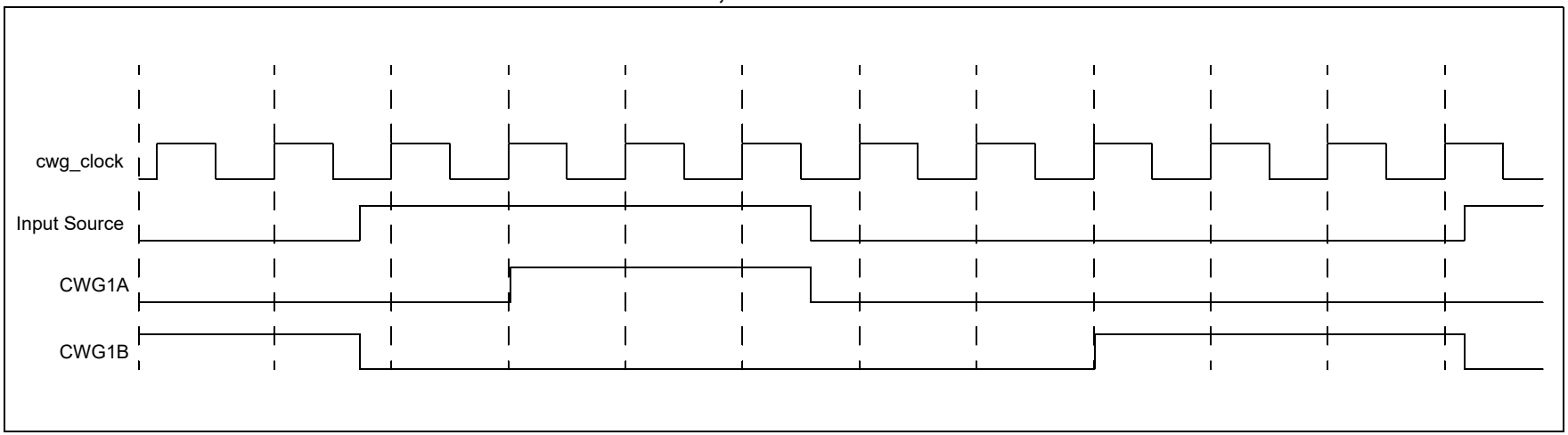

FIGURE 30-7: DEAD-BAND OPERATION, CWG1DBR = 0X03, CWG1DBF = 0X04, SOURCE SHORTER THAN DEAD BAND

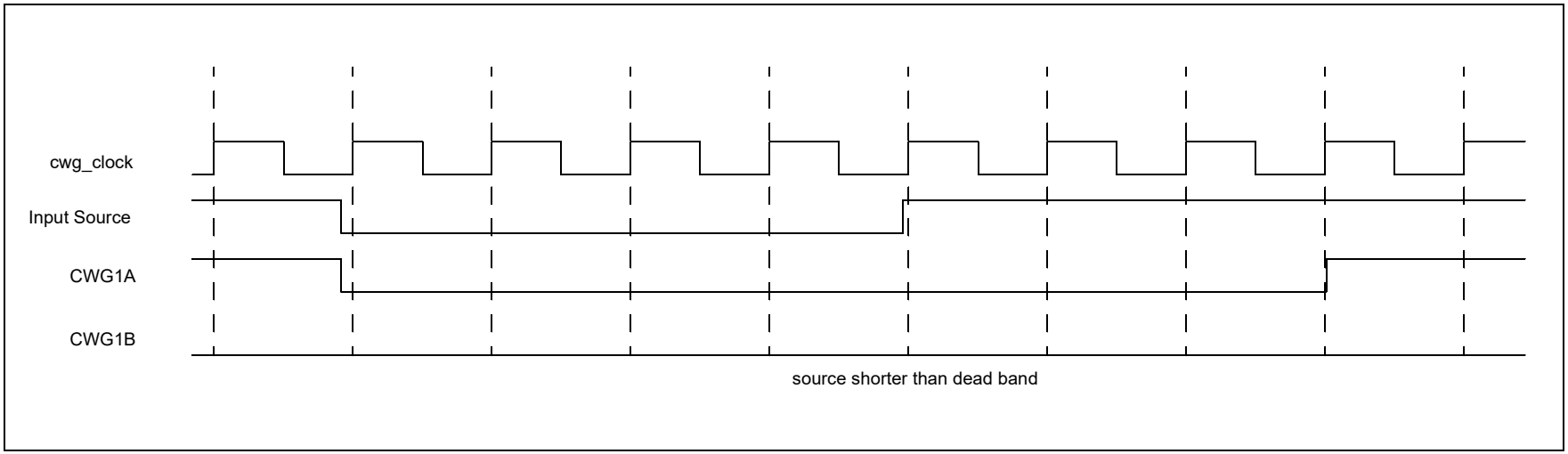

© 2017-2021 Microchip Technology Inc.

30.8 Dead-Band Uncertainty

When the rising and falling edges of the input source are asynchronous to the CWG clock, it creates uncertainty in the dead-band time delay. The maximum uncertainty is equal to one CWG clock period. Refer to Equation 30-1 for more details.

EQUATION 30-1: DEAD-BAND UNCERTAINTY

$$T_{DEADBAND_UNCERTAINTY} = \frac{1}{Fcwg_clock}$$

Example:

$FCWG_CLOCK = 16\ MHz$

Therefore:

$$T_{DEADBAND_UNCERTAINTY} = \frac{1}{Fcwg_clock} = \frac{1}{16MHz} = 62.5ns$$

FIGURE 30-8: EXAMPLE OF PWM DIRECTION CHANGE

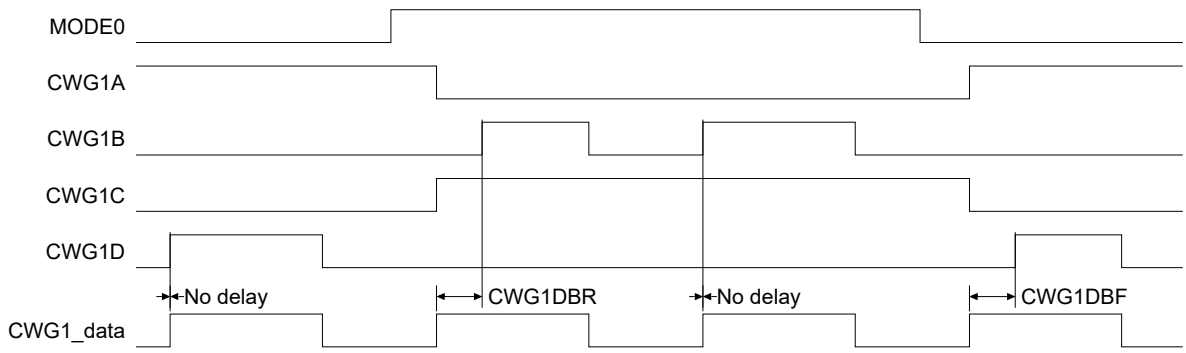

Note 1: WGPOL{ABCD} = 0

2: The direction bit MODE[0] (Register 30-1) can be written any time during the PWM cycle, and takes effect at the next rising CWG1_data.

3: When changing directions, CWG1A and CWG1C switch at rising CWG1_data; modulated CWG1B and CWG1D are held inactive for the dead band duration shown; dead band affects only the first pulse after the direction change.

FIGURE 30-9: CWG HALF-BRIDGE MODE OPERATION

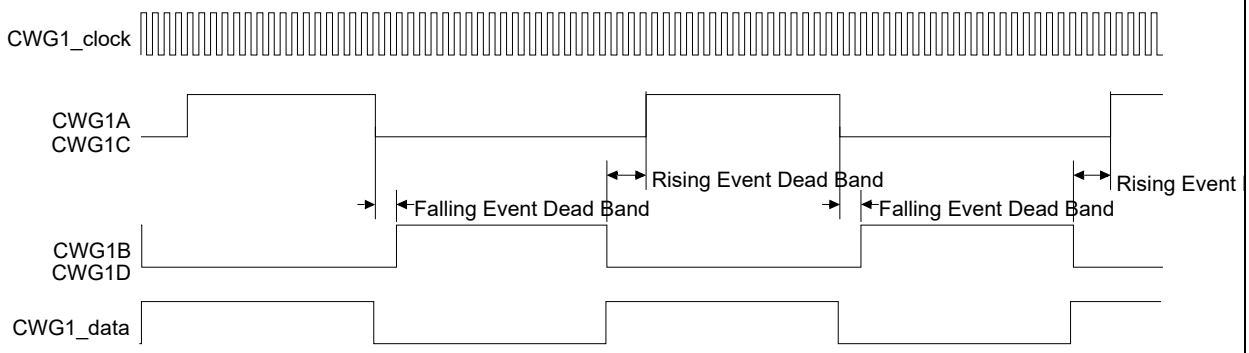

Note: CWG1_rising_src = CCP1_out, CWG1_falling_src = ~CCP1_out

30.9 CWG Steering Mode

In Steering mode (MODE = 00x), the CWG allows any combination of the CWG1x pins to be the modulated signal. The same signal can be simultaneously available on multiple pins, or a fixed-value output can be presented.

When the respective STRx bit of CWG1OCON0 is '0', the corresponding pin is held at the level defined. When the respective STRx bit of CWG1OCON0 is '1', the pin is driven by the input data signal. The user can assign the input data signal to one, two, three, or all four output pins.

The POLx bits of the CWG1CON1 register control the signal polarity only when STRx = 1.

The CWG auto-shutdown operation also applies in Steering modes as described in **Section 30.10 "Auto-Shutdown"**. An auto-shutdown event will only affect pins that have STRx = 1.

30.9.1 STEERING SYNCHRONIZATION

Changing the MODE bits allows for two modes of steering, synchronous and asynchronous.

When MODE = 000, the steering event is asynchronous and will happen at the end of the instruction that writes to STRx (that is, immediately). In this case, the output signal at the output pin may be an incomplete waveform. This can be useful for immediately removing a signal from the pin.

When MODE = 001, the steering update is synchronous and occurs at the beginning of the next rising edge of the input data signal. In this case, steering the output on/off will always produce a complete waveform.

Figure 30-10 and Figure 30-11 illustrate the timing of asynchronous and synchronous steering, respectively.

FIGURE 30-10: EXAMPLE OF ASYNCHRONOUS STEERING EVENT (MODE[2:0] = 000)

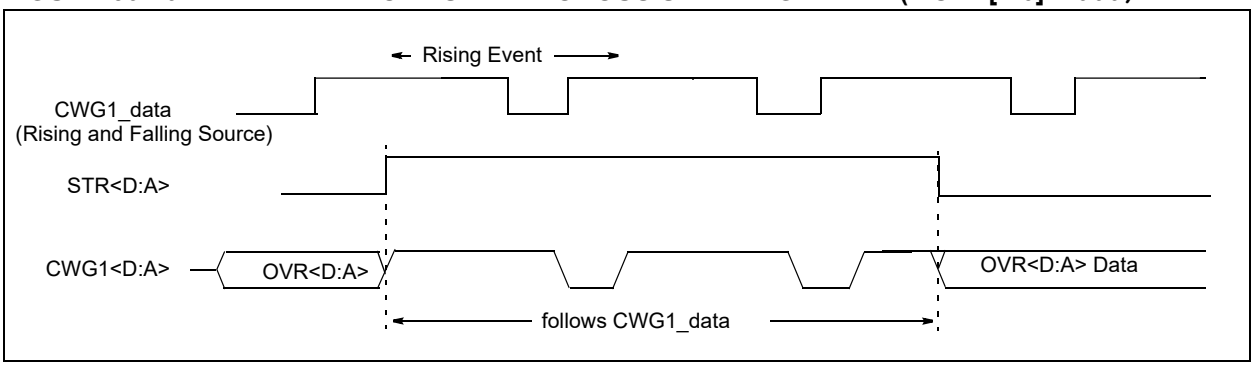

FIGURE 30-11: EXAMPLE OF STEERING EVENT (MODE[2:0] = 001)

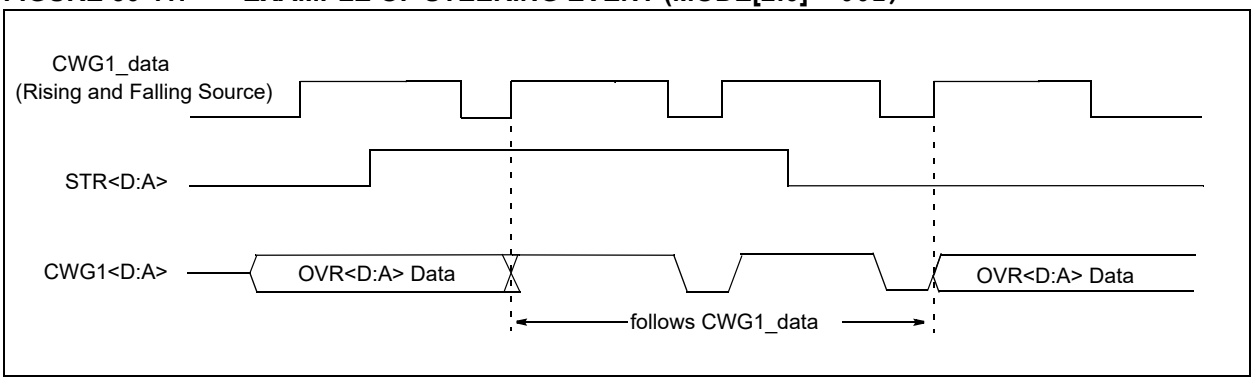

30.10 Auto-Shutdown

Auto-shutdown is a method to immediately override the CWG output levels with specific overrides that allow for safe shutdown of the circuit. The shutdown state can be either cleared automatically or held until cleared by software. The auto-shutdown circuit is illustrated in Figure 30-12.

30.10.1 SHUTDOWN

The shutdown state can be entered by either of the following two methods:

- Software generated
- External Input

30.10.1.1 Software Generated Shutdown

Setting the SHUTDOWN bit of the CWG1AS0 register will force the CWG into the shutdown state.

When the auto-restart is disabled, the shutdown state will persist as long as the SHUTDOWN bit is set.

When auto-restart is enabled, the SHUTDOWN bit will clear automatically and resume operation on the next rising edge event.

30.10.2 EXTERNAL INPUT SOURCE

External shutdown inputs provide the fastest way to safely suspend CWG operation in the event of a Fault condition. When any of the selected shutdown inputs goes active, the CWG outputs will immediately go to the selected override levels without software delay. Several input sources can be selected to cause a shutdown condition. All input sources are active-low. The sources are:

- Comparator C1OUT_sync
- Comparator C2OUT_sync
- Timer2 – TMR2_postscaled
- CWG1IN input pin

Shutdown inputs are selected using the CWG1AS1 register (Register 30-6).

Note:	Shutdown inputs are level sensitive, not edge sensitive. The shutdown state cannot be cleared, except by disabling auto-shutdown, as long as the shutdown input level persists.

30.11 Operation During Sleep

The CWG module operates independently from the system clock and will continue to run during Sleep, provided that the clock and input sources selected remain active.

The HFINTOSC remains active during Sleep when all the following conditions are met:

- CWG module is enabled
- Input source is active
- HFINTOSC is selected as the clock source, regardless of the system clock source selected.

In other words, if the HFINTOSC is simultaneously selected as the system clock and the CWG clock source, when the CWG is enabled and the input source is active, then the CPU will go Idle during Sleep, but the HFINTOSC will remain active and the CWG will continue to operate. This will have a direct effect on the Sleep mode current.

FIGURE 30-12: CWG SHUTDOWN BLOCK DIAGRAM

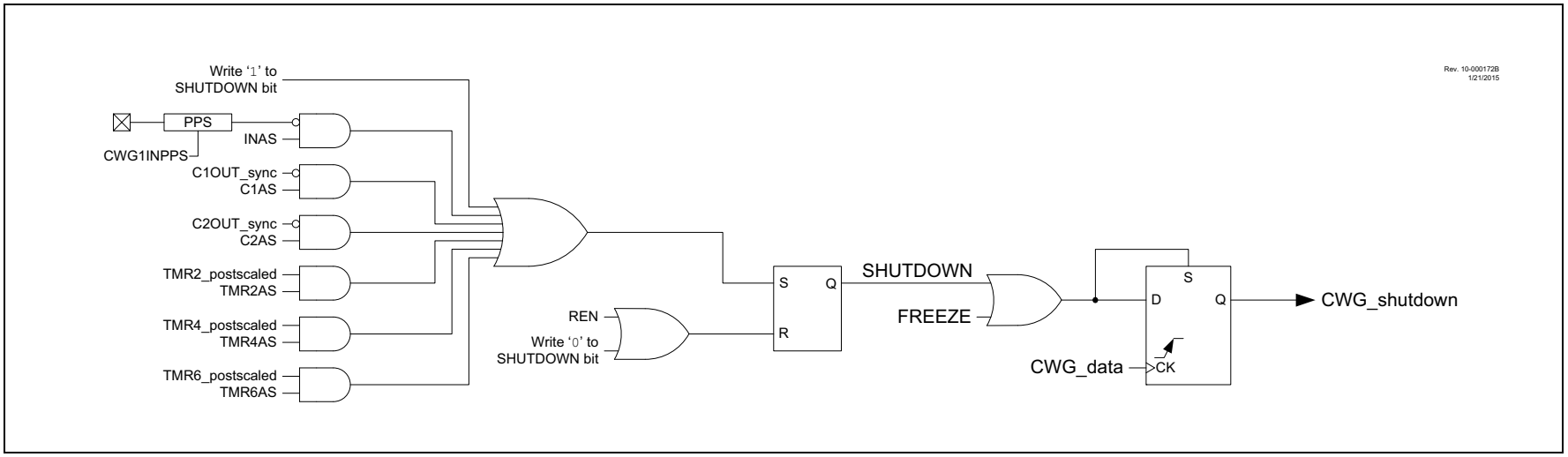

30.12 Configuring the CWG

The following steps illustrate how to properly configure the CWG.

1. Ensure that the TRIS control bits corresponding to the desired CWG pins for the application are set so that the pins are configured as inputs.
2. Clear the EN bit, if not already cleared.
3. Set desired mode of operation with the MODE bits.
4. Set desired dead-band times, if applicable to mode, with the CWG1DBR and CWG1DBF registers.
5. Setup the following controls in the CWG1AS0 and CWG1AS1 registers.
   a. Select the desired shutdown source.
   b. Select both output overrides to the desired levels (this is necessary even if not using auto-shutdown because start-up will be from a shutdown state).
   c. Set which pins will be affected by auto-shutdown with the CWG1AS1 register.
   d. Set the SHUTDOWN bit and clear the REN bit.
6. Select the desired input source using the CWG1DAT register.
7. Configure the following controls.
   a. Select desired clock source using the CWG1CLKCON register.
   b. Select the desired output polarities using the CWG1CON1 register.
   c. Set the output enables for the desired outputs.
8. Set the EN bit.
9. Clear TRIS control bits corresponding to the desired output pins to configure these pins as outputs.
10. If auto-restart is to be used, set the REN bit and the SHUTDOWN bit will be cleared automatically. Otherwise, clear the SHUTDOWN bit to start the CWG.

30.12.1 PIN OVERRIDE LEVELS

The levels driven to the output pins, while the shutdown input is true, are controlled by the LSBD and LSAC bits of the CWG1AS0 register. LSBD[1:0] controls the CWG1B and D override levels and LSAC[1:0] controls the CWG1A and C override levels. The control bit logic level corresponds to the output logic drive level while in the shutdown state. The polarity control does not affect the override level.

30.12.2 AUTO-SHUTDOWN RESTART

After an auto-shutdown event has occurred, there are two ways to resume operation:

- Software controlled
- Auto-restart

The restart method is selected with the REN bit of the CWG1CON2 register. Waveforms of software controlled and automatic restarts are shown in Figure 30-13 and Figure 30-14.

30.12.2.1 Software Controlled Restart

When the REN bit of the CWG1AS0 register is cleared, the CWG must be restarted after an auto-shutdown event by software. Clearing the shutdown state requires all selected shutdown inputs to be low, otherwise the SHUTDOWN bit will remain set. The overrides will remain in effect until the first rising edge event after the SHUTDOWN bit is cleared. The CWG will then resume operation.

30.12.2.2 Auto-Restart

When the REN bit of the CWG1CON2 register is set, the CWG will restart from the auto-shutdown state automatically. The SHUTDOWN bit will clear automatically when all shutdown sources go low. The overrides will remain in effect until the first rising edge event after the SHUTDOWN bit is cleared. The CWG will then resume operation.

© 2017-2021 Microchip Technology Inc.

FIGURE 30-13: SHUTDOWN FUNCTIONALITY, AUTO-RESTART DISABLED (REN = 0, LSAC = 01, LSBD = 01)

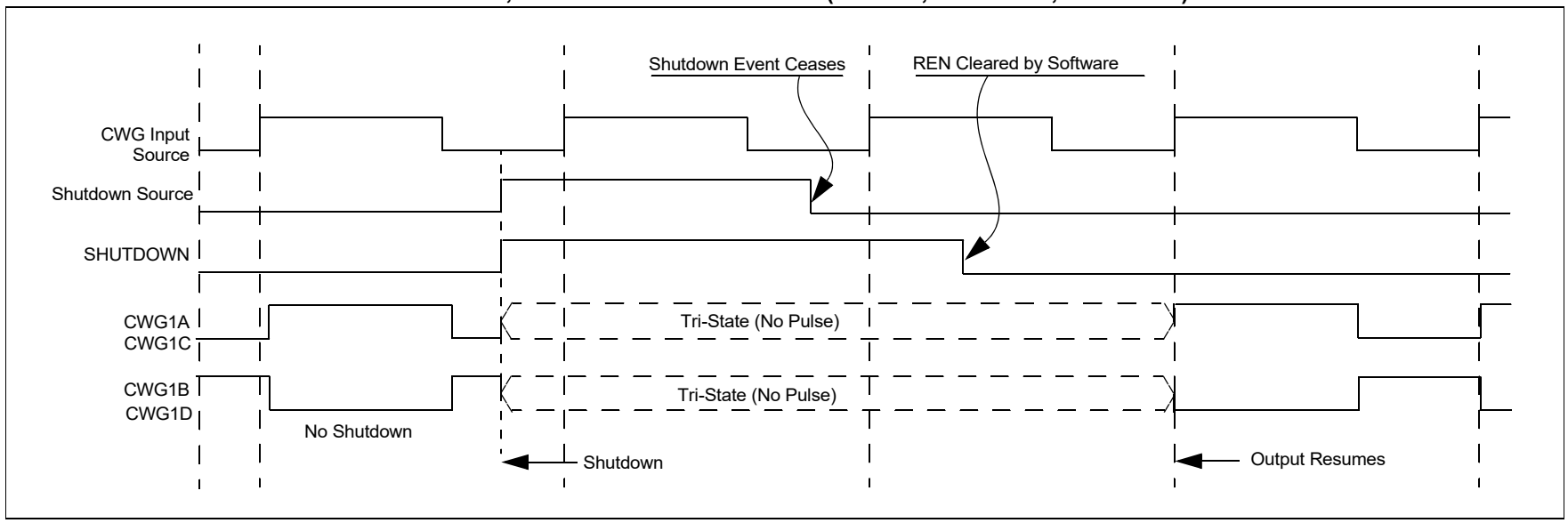

FIGURE 30-14: SHUTDOWN FUNCTIONALITY, AUTO-RESTART ENABLED (REN = 1, LSAC = 01, LSBD = 01)

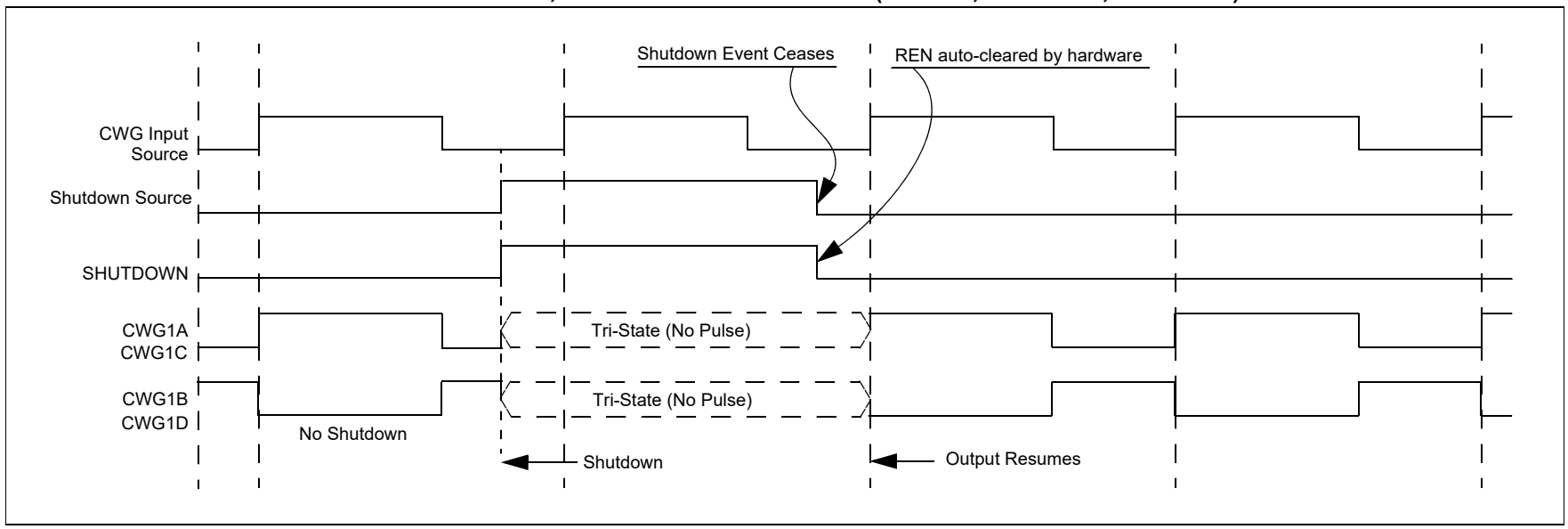

© 2017-2021 Microchip Technology Inc.

30.13 Register Definitions: CWG Control

Long bit name prefixes for the CWG peripherals are shown in **Section 1.1 "Register and Bit Naming Conventions"**.

REGISTER 30-1: CWG1CON0: CWG1 CONTROL REGISTER 0

R/W-0/0	R/W/HC-0/0	U-0	U-0	U-0	R/W-0/0	R/W-0/0	R/W-0/0
EN	LD(1)	—	—	—	MODE[2:0]		
bit 7							bit 0

Legend:		
HC = Bit is cleared by hardware		HS = Bit is set by hardware
R = Readable bit	W = Writable bit	U = Unimplemented bit, read as '0'
u = Bit is unchanged	x = Bit is unknown	-n/n = Value at POR and BOR/Value at all other Resets
'1' = Bit is set	'0' = Bit is cleared	q = Value depends on condition

bit 7 **EN:** CWG1 Enable bit
1 = Module is enabled
0 = Module is disabled

bit 6 **LD:** CWG1 Load Buffer bits(1)
1 = Buffers to be loaded on the next rising/falling event
0 = Buffers not loaded

bit 5-3 **Unimplemented**: Read as '0'

bit 2-0 **MODE[2:0]:** CWG1 Mode bits
111 = Reserved
110 = Reserved
101 = CWG outputs operate in Push-Pull mode
100 = CWG outputs operate in Half-Bridge mode
011 = CWG outputs operate in Reverse Full-Bridge mode
010 = CWG outputs operate in Forward Full-Bridge mode
001 = CWG outputs operate in Synchronous Steering mode
000 = CWG outputs operate in Steering mode

Note 1: This bit can only be set after EN = 1 and cannot be set in the same instruction that EN is set.

REGISTER 30-2: CWG1CON1: CWG1 CONTROL REGISTER 1

U-0	U-0	R-x	U-0	R/W-0/0	R/W-0/0	R/W-0/0	R/W-0/0
—	—	IN	—	POLD	POLC	POLB	POLA
bit 7							bit 0

Legend:		
R = Readable bit	W = Writable bit	U = Unimplemented bit, read as ‘0’
u = Bit is unchanged	x = Bit is unknown	-n/n = Value at POR and BOR/Value at all other Resets
‘1’ = Bit is set	‘0’ = Bit is cleared	q = Value depends on condition

bit 7-6 **Unimplemented:** Read as ‘0’

bit 5 **IN:** CWG Input Value bit

bit 4 **Unimplemented:** Read as ‘0’

bit 3 **POLD:** CWG1D Output Polarity bit
1 = Signal output is inverted polarity
0 = Signal output is normal polarity

bit 2 **POLC:** CWG1C Output Polarity bit
1 = Signal output is inverted polarity
0 = Signal output is normal polarity

bit 1 **POLB:** CWG1B Output Polarity bit
1 = Signal output is inverted polarity
0 = Signal output is normal polarity

bit 0 **POLA:** CWG1A Output Polarity bit
1 = Signal output is inverted polarity
0 = Signal output is normal polarity

REGISTER 30-3: CWG1DBR: CWG1 RISING DEAD-BAND COUNTER REGISTER

U-0	U-0	R/W-x/u	R/W-x/u	R/W-x/u	R/W-x/u	R/W-x/u	R/W-x/u
—	—	DBR[5:0]					
bit 7							bit 0

Legend:		
R = Readable bit	W = Writable bit	U = Unimplemented bit, read as ‘0’
u = Bit is unchanged	x = Bit is unknown	-n/n = Value at POR and BOR/Value at all other Resets
‘1’ = Bit is set	‘0’ = Bit is cleared	q = Value depends on condition

bit 7-6 **Unimplemented:** Read as ‘0’

bit 5-0 **DBR[5:0]:** Rising Event Dead-Band Value for Counter bits

REGISTER 30-4: CWG1DBF: CWG1 FALLING DEAD-BAND COUNTER REGISTER

U-0	U-0	R/W-x/u	R/W-x/u	R/W-x/u	R/W-x/u	R/W-x/u	R/W-x/u
—	—	DBF[5:0]					
bit 7							bit 0

Legend:		
R = Readable bit	W = Writable bit	U = Unimplemented bit, read as ‘0’
u = Bit is unchanged	x = Bit is unknown	-n/n = Value at POR and BOR/Value at all other Resets
‘1’ = Bit is set	‘0’ = Bit is cleared	q = Value depends on condition

bit 7-6 **Unimplemented:** Read as ‘0’

bit 5-0 **DBF[5:0]:** Falling Event Dead-Band Value for Counter bits

REGISTER 30-5: CWG1AS0: CWG1 AUTO-SHUTDOWN CONTROL REGISTER 0

R/W/HS-0/0	R/W-0/0	R/W-0/0	R/W-1/1	R/W-0/0	R/W-1/1	U-0	U-0
SHUTDOWN(1, 2)	REN	LSBD[1:0]		LSAC[1:0]		—	—
bit 7							bit 0

Legend:		
HC = Bit is cleared by hardware		HS = Bit is set by hardware
R = Readable bit	W = Writable bit	U = Unimplemented bit, read as ‘0’
u = Bit is unchanged	x = Bit is unknown	-n/n = Value at POR and BOR/Value at all other Resets
‘1’ = Bit is set	‘0’ = Bit is cleared	q = Value depends on condition

bit 7 **SHUTDOWN:** Auto-Shutdown Event Status bit(1, 2)
- 1 = An Auto-Shutdown state is in effect
- 0 = No Auto-shutdown event has occurred

bit 6 **REN:** Auto-Restart Enable bit
- 1 = Auto-restart enabled
- 0 = Auto-restart disabled

bit 5-4 **LSBD[1:0]:** CWG1B and CWG1D Auto-Shutdown State Control bits
- 11 =A logic ‘1’ is placed on CWG1B/D when an auto-shutdown event is present
- 10 =A logic ‘0’ is placed on CWG1B/D when an auto-shutdown event is present
- 01 =Pin is tri-stated on CWG1B/D when an auto-shutdown event is present
- 00 =The inactive state of the pin, including polarity, is placed on CWG1B/D after the required dead-band interval

bit 3-2 **LSAC[1:0]:** CWG1A and CWG1C Auto-Shutdown State Control bits
- 11 =A logic ‘1’ is placed on CWG1A/C when an auto-shutdown event is present
- 10 =A logic ‘0’ is placed on CWG1A/C when an auto-shutdown event is present
- 01 =Pin is tri-stated on CWG1A/C when an auto-shutdown event is present
- 00 =The inactive state of the pin, including polarity, is placed on CWG1A/C after the required dead-band interval

bit 1-0 **Unimplemented:** Read as ‘0’

Note 1: This bit may be written while EN = 0 (CWG1CON0 register) to place the outputs into the shutdown configuration.

2: The outputs will remain in auto-shutdown state until the next rising edge of the input signal after this bit is cleared.

REGISTER 30-6: CWG1AS1: CWG1 AUTO-SHUTDOWN CONTROL REGISTER 1

U-1	U-1	U-1	R/W-0/0	R/W-0/0	R/W-0/0	R/W-0/0	R/W-0/0
—	—	—	AS4E	AS3E	AS2E	AS1E	AS0E
bit 7							bit 0

Legend:		
R = Readable bit	W = Writable bit	U = Unimplemented bit, read as ‘0’
u = Bit is unchanged	x = Bit is unknown	-n/n = Value at POR and BOR/Value at all other Resets
‘1’ = Bit is set	‘0’ = Bit is cleared	q = Value depends on condition

bit 7-5 **Unimplemented:** Read as ‘0’

bit 4 **AS4E:** CLC2 Output bit
1 = LC2_out shut-down is enabled
0 = LC2_out shut-down is disabled

bit 3 **AS3E:** Comparator C2 Output bit
1 = C2 output shut-down is enabled
0 = C2 output shut-down is disabled

bit 2 **AS2E:** Comparator C1 Output bit
1 = C1 output shut-down is enabled
0 = C1 output shut-down is disabled

bit 2 **AS1E:** TMR2 Postscale Output bit
1 = TMR2 Postscale shut-down is enabled
0 = TMR2 Postscale shut-down is disabled

bit 0 **AS0E:** CWG1 Input Pin bit
1 = Input pin selected by CWG1PPS shut-down is enabled
0 = Input pin selected by CWG1PPS shut-down is disabled

REGISTER 30-7: CWG1STR: CWG1 STEERING CONTROL REGISTER(1)

R/W-0/0	R/W-0/0	R/W-0/0	R/W-0/0	R/W-0/0	R/W-0/0	R/W-0/0	R/W-0/0
OVRD	OVRC	OVRB	OVRA	STRD(2)	STRC(2)	STRB(2)	STRA(2)
bit 7							bit 0

Legend:		
R = Readable bit	W = Writable bit	U = Unimplemented bit, read as ‘0’
u = Bit is unchanged	x = Bit is unknown	-n/n = Value at POR and BOR/Value at all other Resets
‘1’ = Bit is set	‘0’ = Bit is cleared	q = Value depends on condition

bit 7 **OVRD:** Steering Data D bit

bit 6 **OVRC:** Steering Data C bit

bit 5 **OVRB:** Steering Data B bit

bit 4 **OVRA:** Steering Data A bit

bit 3 **STRD:** Steering Enable D bit(2)

`1` = CWG1D output has the CWG1_data waveform with polarity control from POLD bit
`0` = CWG1D output is assigned the value of OVRD bit

bit 2 **STRC:** Steering Enable C bit(2)

`1` = CWG1C output has the CWG1_data waveform with polarity control from POLC bit
`0` = CWG1C output is assigned the value of OVRC bit

bit 1 **STRB:** Steering Enable B bit(2)

`1` = CWG1B output has the CWG1_data waveform with polarity control from POLB bit
`0` = CWG1B output is assigned the value of OVRB bit

bit 0 **STRA:** Steering Enable A bit(2)

`1` = CWG1A output has the CWG1_data waveform with polarity control from POLA bit
`0` = CWG1A output is assigned the value of OVRA bit

Note 1: The bits in this register apply only when MODE[2:0] = `00x`.

2: This bit is effectively double-buffered when MODE[2:0] = `001`.

REGISTER 30-8: CWG1CLK: CWG1 CLOCK SELECTION REGISTER

U-0	U-0	U-0	U-0	U-0	U-0	U-0	R/W-0/0
—	—	—	—	—	—	—	CS
bit 7							bit 0

Legend:		
R = Readable bit	W = Writable bit	U = Unimplemented bit, read as ‘0’
u = Bit is unchanged	x = Bit is unknown	-n/n = Value at POR and BOR/Value at all other Resets
‘1’ = Bit is set	‘0’ = Bit is cleared	q = Value depends on condition

bit 7-1 **Unimplemented:** Read as ‘0’

bit 0 **CS:** CWG1 Clock Selection bit
1 = HFINTOSC 16 MHz is selected
0 = FOSC is selected

REGISTER 30-9: CWG1DAT: CWG1 INPUT SELECTION REGISTER

U-0	U-0	U-0	U-0	R/W-0/0	R/W-0/0	R/W-0/0	R/W-0/0
—	—	—	—	DAT[3:0]			
bit 7							bit 0

Legend:		
R = Readable bit	W = Writable bit	U = Unimplemented bit, read as ‘0’
u = Bit is unchanged	x = Bit is unknown	-n/n = Value at POR and BOR/Value at all other Resets
‘1’ = Bit is set	‘0’ = Bit is cleared	q = Value depends on condition

bit 7-4 **Unimplemented:** Read as ‘0’

bit 3-0 **DAT[3:0]:** CWG1 Input Selection bits
1111 = Reserved. No channel connected.
1110 = Reserved. No channel connected.
1101 = LC4_out
1100 = LC3_out
1011 = LC2_out
1010 = LC1_out
1001 = Comparator C2 out
1000 = Comparator C1 out
0111 = NCO1 output
0110 = PWM6_out
0101 = PWM5_out
0100 = PWM4_out
0011 = PWM3_out
0010 = CCP2_out
0001 = CCP1_out
0000 = CWG11CLK

TABLE 30-3: SUMMARY OF REGISTERS ASSOCIATED WITH CWG

Name	Bit 7	Bit 6	Bit 5	Bit 4	Bit 3	Bit 2	Bit 1	Bit 0	Register on Page
CWG1CLKCON	—	—	—	—	—	—	—	CS	357
CWG1DAT	—	—	—	—	DAT[3:0]				357
CWG1DBR	—	—	DBR[5:0]						353
CWG1DBF	—	—	DBF[5:0]						353
CWG1CON0	EN	LD	—	—	—	MODE[2:0]			356
CWG1CON1	—	—	IN	—	POLD	POLC	POLB	POLA	352
CWG1AS0	SHUTDOWN	REN	LSBD[1:0]		LSAC[1:0]		—	—	354
CWG1AS1	—	—	—	AS4E	AS3E	AS2E	AS1E	AS0E	355
CWG1STR	OVRD	OVRC	OVRB	OVRA	STRD	STRC	STRB	STRA	356

Legend: – = unimplemented locations read as '0'. Shaded cells are not used by CWG.

31.0 CONFIGURABLE LOGIC CELL (CLC)

The Configurable Logic Cell (CLCx) module provides programmable logic that operates outside the speed limitations of software execution. The logic cell selects from 40 input signals and, through the use of configurable gates, reduces the inputs to four logic lines that drive one of eight selectable single-output logic functions.

Input sources are a combination of the following:

- I/O pins
- Internal clocks
- Peripherals
- Register bits

The output can be directed internally to peripherals and to an output pin.

The CLC modules available are shown in Table 31-1.

TABLE 31-1: AVAILABLE CLC MODULES

Device	CLC1	CLC2	CLC3	CLC4
PIC16(L)F15324/44	●	●	●	●

Note: The CLC1, CLC2, CLC3 and CLC4 are four separate module instances of the same CLC module design. Throughout this section, the lower case ‘x’ in register and bit names is a generic reference to the CLC number (which may be substituted with 1, 2, 3, or 4 during code development). For example, the control register is generically described in this chapter as CLCxCON, but the actual device registers are CLC1CON, CLC2CON, CLC3CON and CLC4CON. Similarly, the LCxEN bit represents the LC1EN, LC2EN, LC3EN and LC4EN bits.

Refer to Figure 31-1 for a simplified diagram showing signal flow through the CLCx.

Possible configurations include:

- Combinatorial Logic
  - AND
  - NAND
  - AND-OR
  - AND-OR-INVERT
  - OR-XOR
  - OR-XNOR
- Latches
  - S-R
  - Clocked D with Set and Reset
  - Transparent D with Set and Reset
  - Clocked J-K with Reset

FIGURE 31-1: CLCx SIMPLIFIED BLOCK DIAGRAM

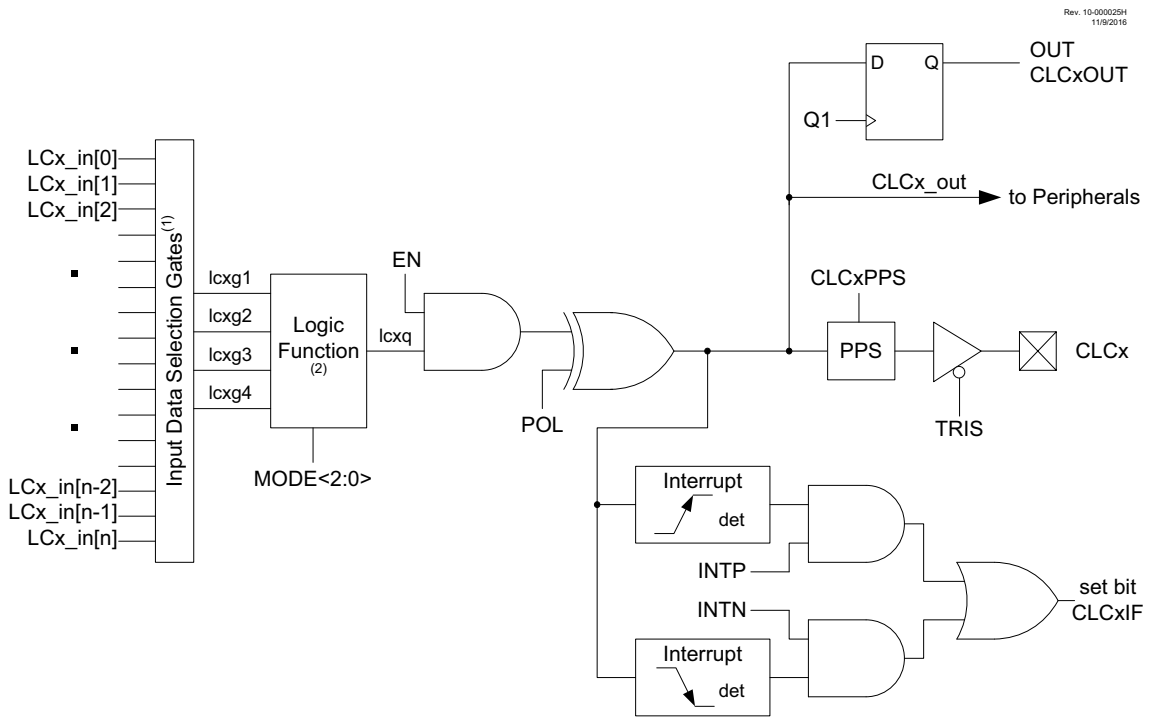

Note 1: See Figure 31-2: Input Data Selection and Gating.

2: See Figure 31-3: Programmable Logic Functions.

31.1 CLCx Setup

Programming the CLCx module is performed by configuring the four stages in the logic signal flow. The four stages are:

- Data selection
- Data gating
- Logic function selection
- Output polarity

Each stage is setup at run time by writing to the corresponding CLCx Special Function Registers. This has the added advantage of permitting logic reconfiguration on-the-fly during program execution.

31.1.1 DATA SELECTION

There are 40 signals available as inputs to the configurable logic. Four 40-input multiplexers are used to select the inputs to pass on to the next stage.

Data selection is through four multiplexers as indicated on the left side of Figure 31-2. Data inputs in the figure are identified by a generic numbered input name.

Table 31-2 correlates the generic input name to the actual signal for each CLC module. The column labeled 'LCxDyS[4:0] Value' indicates the MUX selection code for the selected data input. LCxDyS is an abbreviation to identify specific multiplexers: LCxD1S[4:0] through LCxD4S[4:0].

Data inputs are selected with CLCxSEL0 through CLCxSEL3 registers (Register 31-3 through Register 31-6).

TABLE 31-2: CLCx DATA INPUT SELECTION

LCxDyS[4:0] Value	CLCx Input Source
101000 to 111111 [40+]	Reserved
100111 [39]	CWG1B output
100110 [38]	CWG1A output
100101 [37]	Reserved
100100 [36]	Reserved
100011 [35]	MSSP1 SCK output
100010 [34]	MSSP1 SDO output
100001 [33]	EUSART2 (TX/CK) output
100000 [32]	EUSART2 (DT) output
011111 [31]	EUSART1 (TX/CK) output
011110 [30]	EUSART1 (DT) output
011101 [29]	CLC4 output
011100 [28]	CLC3 output
011011 [27]	CLC2 output
011010 [26]	CLC1 output
011001 [25]	IOCIF
011000 [24]	ZCD output
010111 [23]	C2OUT
010110 [22]	C1OUT
010101 [21]	NCO1 output
010100 [20]	PWM6 output
010011 [19]	PWM5 output
010010 [18]	PWM4 output
010001 [17]	PWM3 output
010000 [16]	CCP2 output
001111 [15]	CCP1 output
001110 [14]	Timer2 overflow
001101 [13]	Timer1 overflow
001100 [12]	Timer0 overflow
001011 [11]	CLKR
001010 [10]	FRC
001001 [9]	Reserved
001000 [8]	MFINTOSC (32 kHz)
000111 [7]	MFINTOSC (500 kHz)
000110 [6]	LFINTOSC
000101 [5]	HFINTOSC
000100 [4]	Fosc
000011 [3]	CLCIN3PPS
000010 [2]	CLCIN2PPS
000001 [1]	CLCIN1PPS
000000 [0]	CLCIN0PPS

31.1.2 DATA GATING

Outputs from the input multiplexers are directed to the desired logic function input through the data gating stage. Each data gate can direct any combination of the four selected inputs.

Note: Data gating is undefined at power-up.

The gate stage is more than just signal direction. The gate can be configured to direct each input signal as inverted or noninverted data. The output of each gate can be inverted before going on to the logic function stage.

The gating is in essence a 1-to-4 input AND/NAND/OR/NOR gate. When every input is inverted and the output is inverted, the gate is an OR of all enabled data inputs. When the inputs and output are not inverted, the gate is an AND or all enabled inputs.

Table 31-3 summarizes the basic logic that can be obtained in gate 1 by using the gate logic select bits. The table shows the logic of four input variables, but each gate can be configured to use less than four. If no inputs are selected, the output will be zero or one, depending on the gate output polarity bit.

TABLE 31-3: DATA GATING LOGIC

CLCxGLSy	LCxGyPOL	Gate Logic
0x55	1	4-input AND
0x55	0	4-input NAND
0xAA	1	4-input NOR
0xAA	0	4-input OR
0x00	0	Logic 0
0x00	1	Logic 1

It is possible (but not recommended) to select both the true and negated values of an input. When this is done, the gate output is zero, regardless of the other inputs, but may emit logic glitches (transient-induced pulses). If the output of the channel must be zero or one, the recommended method is to set all gate bits to zero and use the gate polarity bit to set the desired level.

Data gating is configured with the logic gate select registers as follows:

- Gate 1: CLCxGLS0 (Register 31-7)
- Gate 2: CLCxGLS1 (Register 31-8)
- Gate 3: CLCxGLS2 (Register 31-9)
- Gate 4: CLCxGLS3 (Register 31-10)

Register number suffixes are different than the gate numbers because other variations of this module have multiple gate selections in the same register.

Data gating is indicated in the right side of Figure 31-2. Only one gate is shown in detail. The remaining three gates are configured identically with the exception that the data enables correspond to the enables for that gate.

31.1.3 LOGIC FUNCTION

There are eight available logic functions including:

- AND-OR
- OR-XOR
- AND
- S-R Latch
- D Flip-Flop with Set and Reset
- D Flip-Flop with Reset
- J-K Flip-Flop with Reset
- Transparent Latch with Set and Reset

Logic functions are shown in Figure 31-2. Each logic function has four inputs and one output. The four inputs are the four data gate outputs of the previous stage. The output is fed to the inversion stage and from there to other peripherals, an output pin, and back to the CLCx itself.

31.1.4 OUTPUT POLARITY

The last stage in the Configurable Logic Cell is the output polarity. Setting the LCxPOL bit of the CLCxPOL register inverts the output signal from the logic stage. Changing the polarity while the interrupts are enabled will cause an interrupt for the resulting output transition.

© 2017-2021 Microchip Technology Inc.

31.2 CLCx Interrupts

An interrupt will be generated upon a change in the output value of the CLCx when the appropriate interrupt enables are set. A rising edge detector and a falling edge detector are present in each CLC for this purpose.

The CLCxIF bit of the associated PIR5 register will be set when either edge detector is triggered and its associated enable bit is set. The LCxINTP enables rising edge interrupts and the LCxINTN bit enables falling edge interrupts. Both are located in the CLCxCON register.

To fully enable the interrupt, set the following bits:

- CLCxIE bit of the PIE5 register
- LCxINTP bit of the CLCxCON register (for a rising edge detection)
- LCxINTN bit of the CLCxCON register (for a falling edge detection)
- PEIE and GIE bits of the INTCON register

The CLCxIF bit of the PIR5 register, must be cleared in software as part of the interrupt service. If another edge is detected while this flag is being cleared, the flag will still be set at the end of the sequence.

31.3 Output Mirror Copies

Mirror copies of all LCxCON output bits are contained in the CLCxDATA register. Reading this register reads the outputs of all CLCs simultaneously. This prevents any reading skew introduced by testing or reading the LCxOUT bits in the individual CLCxCON registers.

31.4 Effects of a Reset

The CLCxCON register is cleared to zero as the result of a Reset. All other selection and gating values remain unchanged.

31.5 Operation During Sleep

The CLC module operates independently from the system clock and will continue to run during Sleep, provided that the input sources selected remain active.

The HFINTOSC remains active during Sleep when the CLC module is enabled and the HFINTOSC is selected as an input source, regardless of the system clock source selected.

In other words, if the HFINTOSC is simultaneously selected as the system clock and as a CLC input source, when the CLC is enabled, the CPU will go Idle during Sleep, but the CLC will continue to operate and the HFINTOSC will remain active.

This will have a direct effect on the Sleep mode current.

31.6 CLCx Setup Steps

Follow these steps when setting up the CLCx:

- Disable CLCx by clearing the LCxEN bit.
- Select desired inputs using CLCxSEL0 through CLCxSEL3 registers (See Table 31-2).
- Clear any associated ANSEL bits.
- Enable the chosen inputs through the four gates using CLCxGLS0, CLCxGLS1, CLCxGLS2, and CLCxGLS3 registers.
- Select the gate output polarities with the LCxGyPOL bits of the CLCxPOL register.
- Select the desired logic function with the LCxMODE[2:0] bits of the CLCxCON register.
- Select the desired polarity of the logic output with the LCxPOL bit of the CLCxPOL register. (This step may be combined with the previous gate output polarity step).
- If driving a device pin, set the desired pin PPS control register and also clear the TRIS bit corresponding to that output.
- If interrupts are desired, configure the following bits:
  - Set the LCxINTP bit in the CLCxCON register for rising event.
  - Set the LCxINTN bit in the CLCxCON register for falling event.
  - Set the CLCxIE bit of the PIE5 register.
  - Set the GIE and PEIE bits of the INTCON register.
- Enable the CLCx by setting the LCxEN bit of the CLCxCON register.

FIGURE 31-2: INPUT DATA SELECTION AND GATING

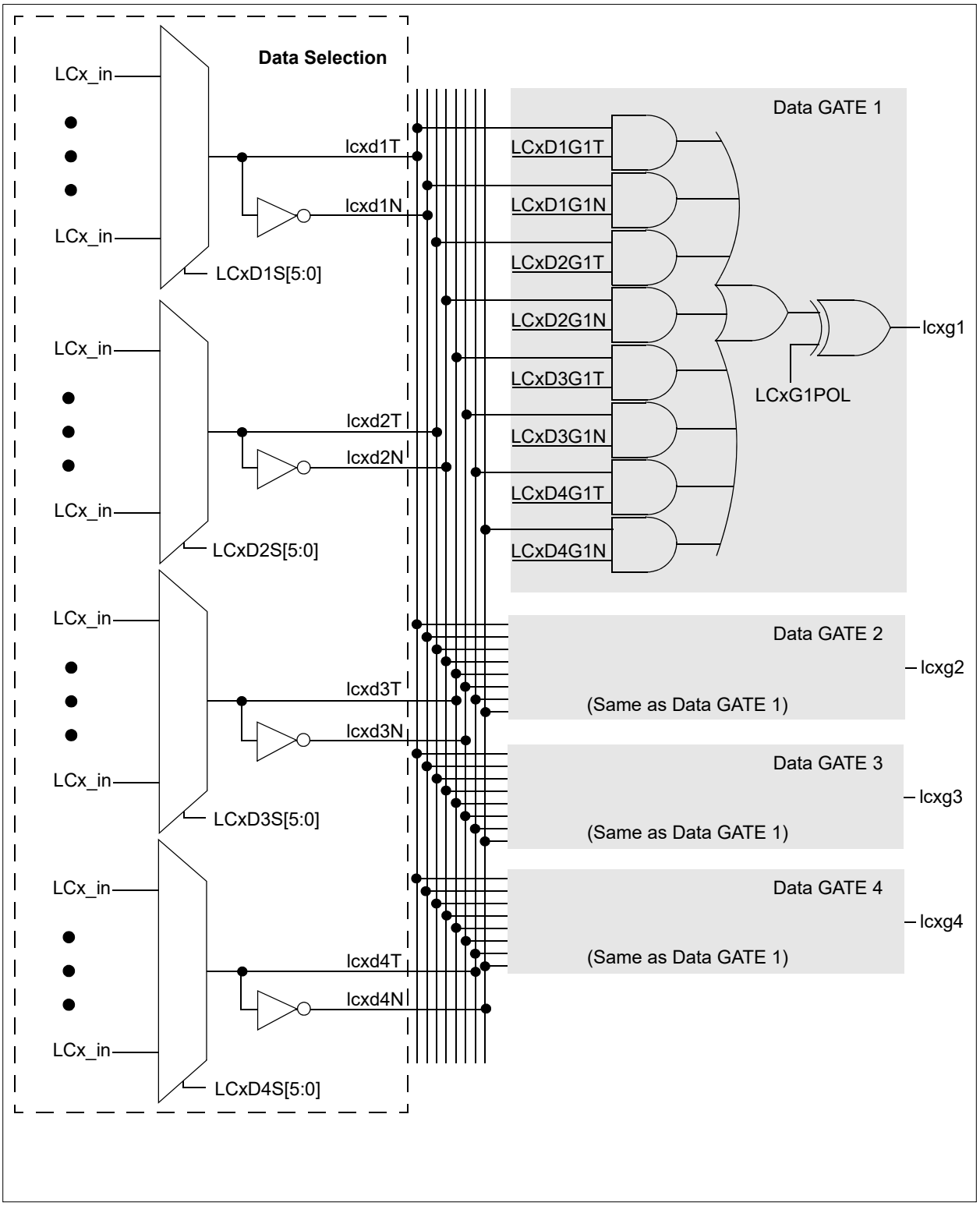

FIGURE 31-3: PROGRAMMABLE LOGIC FUNCTIONS

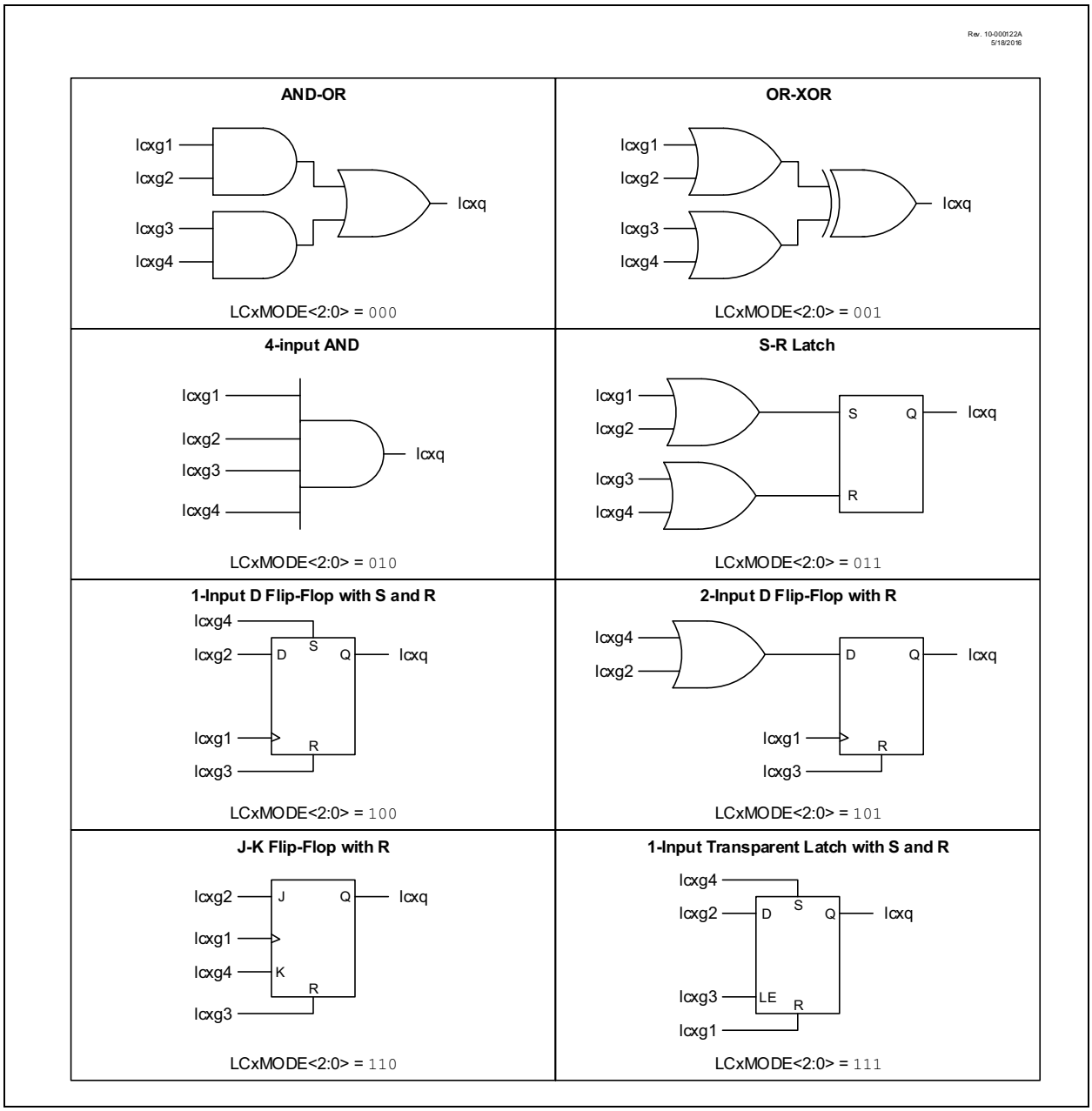

31.7 Register Definitions: CLC Control

REGISTER 31-1: CLCxCON: CONFIGURABLE LOGIC CELL CONTROL REGISTER

R/W-0/0	U-0	R-0/0	R/W-0/0	R/W-0/0	R/W-0/0	R/W-0/0	R/W-0/0
LCxEN	—	LCxOUT	LCxINTP	LCxINTN	LCxMODE[2:0]		
bit 7							bit 0

Legend:		
R = Readable bit	W = Writable bit	U = Unimplemented bit, read as ‘0’
u = Bit is unchanged	x = Bit is unknown	-n/n = Value at POR and BOR/Value at all other Resets
‘1’ = Bit is set	‘0’ = Bit is cleared	

bit 7 **LCxEN:** Configurable Logic Cell Enable bit
1 = Configurable logic cell is enabled and mixing input signals
0 = Configurable logic cell is disabled and has logic zero output

bit 6 **Unimplemented:** Read as ‘0’

bit 5 **LCxOUT:** Configurable Logic Cell Data Output bit
Read-only: logic cell output data, after LCPOL; sampled from CLCxOUT

bit 4 **LCxINTP:** Configurable Logic Cell Positive Edge Going Interrupt Enable bit
1 = CLCxIF will be set when a rising edge occurs on CLCxOUT
0 = CLCxIF will not be set

bit 3 **LCxINTN:** Configurable Logic Cell Negative Edge Going Interrupt Enable bit
1 = CLCxIF will be set when a falling edge occurs on CLCxOUT
0 = CLCxIF will not be set

bit 2-0 **LCxMODE[2:0]:** Configurable Logic Cell Functional Mode bits
111 = Cell is 1-input transparent latch with S and R
110 = Cell is J-K flip-flop with R
101 = Cell is 2-input D flip-flop with R
100 = Cell is 1-input D flip-flop with S and R
011 = Cell is S-R latch
010 = Cell is 4-input AND
001 = Cell is OR-XOR
000 = Cell is AND-OR

REGISTER 31-2: CLCxPOL: SIGNAL POLARITY CONTROL REGISTER

R/W-0/0	U-0	U-0	U-0	R/W-x/u	R/W-x/u	R/W-x/u	R/W-x/u
LCxPOL	—	—	—	LCxG4POL	LCxG3POL	LCxG2POL	LCxG1POL
bit 7							bit 0

Legend:		
R = Readable bit	W = Writable bit	U = Unimplemented bit, read as ‘0’
u = Bit is unchanged	x = Bit is unknown	-n/n = Value at POR and BOR/Value at all other Resets
‘1’ = Bit is set	‘0’ = Bit is cleared	

bit 7 **LCxPOL:** CLCxOUT Output Polarity Control bit
1 = The output of the logic cell is inverted
0 = The output of the logic cell is not inverted

bit 6-4 **Unimplemented:** Read as ‘0’

bit 3 **LCxG4POL:** Gate 3 Output Polarity Control bit
1 = The output of gate 3 is inverted when applied to the logic cell
0 = The output of gate 3 is not inverted

bit 2 **LCxG3POL:** Gate 2 Output Polarity Control bit
1 = The output of gate 2 is inverted when applied to the logic cell
0 = The output of gate 2 is not inverted

bit 1 **LCxG2POL:** Gate 1 Output Polarity Control bit
1 = The output of gate 1 is inverted when applied to the logic cell
0 = The output of gate 1 is not inverted

bit 0 **LCxG1POL:** Gate 0 Output Polarity Control bit
1 = The output of gate 0 is inverted when applied to the logic cell
0 = The output of gate 0 is not inverted

REGISTER 31-3: CLCxSEL0: GENERIC CLCx DATA 0 SELECT REGISTER

U-0	U-0	R/W-x/u	R/W-x/u	R/W-x/u	R/W-x/u	R/W-x/u	R/W-x/u
—	—	LCxD1S[5:0]					
bit 7							bit 0

Legend:		
R = Readable bit	W = Writable bit	U = Unimplemented bit, read as ‘0’
u = Bit is unchanged	x = Bit is unknown	-n/n = Value at POR and BOR/Value at all other Resets
‘1’ = Bit is set	‘0’ = Bit is cleared	

bit 7-6 **Unimplemented:** Read as ‘0’

bit 5-0 **LCxD1S[5:0]:** CLCx Data1 Input Selection bits
See Table 31-2.

REGISTER 31-4: CLCxSEL1: GENERIC CLCx DATA 1 SELECT REGISTER

U-0	U-0	R/W-x/u	R/W-x/u	R/W-x/u	R/W-x/u	R/W-x/u	R/W-x/u
—	—	LCxD2S[5:0]					
bit 7							bit 0

Legend:		
R = Readable bit	W = Writable bit	U = Unimplemented bit, read as ‘0’
u = Bit is unchanged	x = Bit is unknown	-n/n = Value at POR and BOR/Value at all other Resets
‘1’ = Bit is set	‘0’ = Bit is cleared	

bit 7-6 **Unimplemented:** Read as ‘0’

bit 5-0 **LCxD2S[5:0]:** CLCx Data 2 Input Selection bits
See Table 31-2.

REGISTER 31-5: CLCxSEL2: GENERIC CLCx DATA 2 SELECT REGISTER

U-0	U-0	R/W-x/u	R/W-x/u	R/W-x/u	R/W-x/u	R/W-x/u	R/W-x/u
—	—	LCxD3S[5:0]					
bit 7							bit 0

Legend:		
R = Readable bit	W = Writable bit	U = Unimplemented bit, read as ‘0’
u = Bit is unchanged	x = Bit is unknown	-n/n = Value at POR and BOR/Value at all other Resets
‘1’ = Bit is set	‘0’ = Bit is cleared	

bit 7-6 **Unimplemented:** Read as ‘0’

bit 5-0 **LCxD3S[5:0]:** CLCx Data 3 Input Selection bits
See Table 31-2.

REGISTER 31-6: CLCxSEL3: GENERIC CLCx DATA 3 SELECT REGISTER

U-0	U-0	R/W-x/u	R/W-x/u	R/W-x/u	R/W-x/u	R/W-x/u	R/W-x/u
—	—	LCxD4S[5:0]					
bit 7							bit 0

Legend:		
R = Readable bit	W = Writable bit	U = Unimplemented bit, read as ‘0’
u = Bit is unchanged	x = Bit is unknown	-n/n = Value at POR and BOR/Value at all other Resets
‘1’ = Bit is set	‘0’ = Bit is cleared	

bit 7-6 **Unimplemented:** Read as ‘0’

bit 5-0 **LCxD4S[5:0]:** CLCx Data 4 Input Selection bits
See Table 31-2.

REGISTER 31-7: CLCxGLS0: GATE 0 LOGIC SELECT REGISTER

R/W-x/u	R/W-x/u	R/W-x/u	R/W-x/u	R/W-x/u	R/W-x/u	R/W-x/u	R/W-x/u
LCxG1D4T	LCxG1D4N	LCxG1D3T	LCxG1D3N	LCxG1D2T	LCxG1D2N	LCxG1D1T	LCxG1D1N
bit 7							bit 0

Legend:		
R = Readable bit	W = Writable bit	U = Unimplemented bit, read as ‘0’
u = Bit is unchanged	x = Bit is unknown	-n/n = Value at POR and BOR/Value at all other Resets
‘1’ = Bit is set	‘0’ = Bit is cleared	

bit 7 **LCxG1D4T:** Gate 0 Data 4 True (noninverted) bit
1 = CLCIN3 (true) is gated into CLCx Gate 0
0 = CLCIN3 (true) is not gated into CLCx Gate 0

bit 6 **LCxG1D4N:** Gate 0 Data 4 Negated (inverted) bit
1 = CLCIN3 (inverted) is gated into CLCx Gate 0
0 = CLCIN3 (inverted) is not gated into CLCx Gate 0

bit 5 **LCxG1D3T:** Gate 0 Data 3 True (noninverted) bit
1 = CLCIN2 (true) is gated into CLCx Gate 0
0 = CLCIN2 (true) is not gated into CLCx Gate 0

bit 4 **LCxG1D3N:** Gate 0 Data 3 Negated (inverted) bit
1 = CLCIN2 (inverted) is gated into CLCx Gate 0
0 = CLCIN2 (inverted) is not gated into CLCx Gate 0

bit 3 **LCxG1D2T:** Gate 0 Data 2 True (noninverted) bit
1 = CLCIN1 (true) is gated into CLCx Gate 0
0 = CLCIN1 (true) is not gated into l CLCx Gate 0

bit 2 **LCxG1D2N:** Gate 0 Data 2 Negated (inverted) bit
1 = CLCIN1 (inverted) is gated into CLCx Gate 0
0 = CLCIN1 (inverted) is not gated into CLCx Gate 0

bit 1 **LCxG1D1T:** Gate 0 Data 1 True (noninverted) bit
1 = CLCIN0 (true) is gated into CLCx Gate 0
0 = CLCIN0 (true) is not gated into CLCx Gate 0

bit 0 **LCxG1D1N:** Gate 0 Data 1 Negated (inverted) bit
1 = CLCIN0 (inverted) is gated into CLCx Gate 0
0 = CLCIN0 (inverted) is not gated into CLCx Gate 0

© 2017-2021 Microchip Technology Inc.

REGISTER 31-8: CLCxGLS1: GATE 1 LOGIC SELECT REGISTER

R/W-x/u	R/W-x/u	R/W-x/u	R/W-x/u	R/W-x/u	R/W-x/u	R/W-x/u	R/W-x/u
LCxG2D4T	LCxG2D4N	LCxG2D3T	LCxG2D3N	LCxG2D2T	LCxG2D2N	LCxG2D1T	LCxG2D1N
bit 7							bit 0

Legend:		
R = Readable bit	W = Writable bit	U = Unimplemented bit, read as ‘0’
u = Bit is unchanged	x = Bit is unknown	-n/n = Value at POR and BOR/Value at all other Resets
‘1’ = Bit is set	‘0’ = Bit is cleared	

bit 7 **LCxG2D4T:** Gate 1 Data 4 True (noninverted) bit
1 = CLCIN3 (true) is gated into CLCx Gate 1
0 = CLCIN3 (true) is not gated into CLCx Gate 1

bit 6 **LCxG2D4N:** Gate 1 Data 4 Negated (inverted) bit
1 = CLCIN3 (inverted) is gated into CLCx Gate 1
0 = CLCIN3 (inverted) is not gated into CLCx Gate 1

bit 5 **LCxG2D3T:** Gate 1 Data 3 True (noninverted) bit
1 = CLCIN2 (true) is gated into CLCx Gate 1
0 = CLCIN2 (true) is not gated into CLCx Gate 1

bit 4 **LCxG2D3N:** Gate 1 Data 3 Negated (inverted) bit
1 = CLCIN2 (inverted) is gated into CLCx Gate 1
0 = CLCIN2 (inverted) is not gated into CLCx Gate 1

bit 3 **LCxG2D2T:** Gate 1 Data 2 True (noninverted) bit
1 = CLCIN1 (true) is gated into CLCx Gate 1
0 = CLCIN1 (true) is not gated into CLCx Gate 1

bit 2 **LCxG2D2N:** Gate 1 Data 2 Negated (inverted) bit
1 = CLCIN1 (inverted) is gated into CLCx Gate 1
0 = CLCIN1 (inverted) is not gated into CLCx Gate 1

bit 1 **LCxG2D1T:** Gate 1 Data 1 True (noninverted) bit
1 = CLCIN0 (true) is gated into CLCx Gate 1
0 = CLCIN0 (true) is not gated into CLCx Gate1

bit 0 **LCxG2D1N:** Gate 1 Data 1 Negated (inverted) bit
1 = CLCIN0 (inverted) is gated into CLCx Gate 1
0 = CLCIN0 (inverted) is not gated into CLCx Gate 1

REGISTER 31-9: CLCxGLS2: GATE 2 LOGIC SELECT REGISTER

R/W-x/u	R/W-x/u	R/W-x/u	R/W-x/u	R/W-x/u	R/W-x/u	R/W-x/u	R/W-x/u
LCxG3D4T	LCxG3D4N	LCxG3D3T	LCxG3D3N	LCxG3D2T	LCxG3D2N	LCxG3D1T	LCxG3D1N
bit 7							bit 0

Legend:		
R = Readable bit	W = Writable bit	U = Unimplemented bit, read as ‘0’
u = Bit is unchanged	x = Bit is unknown	-n/n = Value at POR and BOR/Value at all other Resets
‘1’ = Bit is set	‘0’ = Bit is cleared	

bit 7 **LCxG3D4T:** Gate 2 Data 4 True (noninverted) bit
1 = CLCIN3 (true) is gated into CLCx Gate 2
0 = CLCIN3 (true) is not gated into CLCx Gate 2

bit 6 **LCxG3D4N:** Gate 2 Data 4 Negated (inverted) bit
1 = CLCIN3 (inverted) is gated into CLCx Gate 2
0 = CLCIN3 (inverted) is not gated into CLCx Gate 2

bit 5 **LCxG3D3T:** Gate 2 Data 3 True (noninverted) bit
1 = CLCIN2 (true) is gated into CLCx Gate 2
0 = CLCIN2 (true) is not gated into CLCx Gate 2

bit 4 **LCxG3D3N:** Gate 2 Data 3 Negated (inverted) bit
1 = CLCIN2 (inverted) is gated into CLCx Gate 2
0 = CLCIN2 (inverted) is not gated into CLCx Gate 2

bit 3 **LCxG3D2T:** Gate 2 Data 2 True (noninverted) bit
1 = CLCIN1 (true) is gated into CLCx Gate 2
0 = CLCIN1 (true) is not gated into CLCx Gate 2

bit 2 **LCxG3D2N:** Gate 2 Data 2 Negated (inverted) bit
1 = CLCIN1 (inverted) is gated into CLCx Gate 2
0 = CLCIN1 (inverted) is not gated into CLCx Gate 2

bit 1 **LCxG3D1T:** Gate 2 Data 1 True (noninverted) bit
1 = CLCIN0 (true) is gated into CLCx Gate 2
0 = CLCIN0 (true) is not gated into CLCx Gate 2

bit 0 **LCxG3D1N:** Gate 2 Data 1 Negated (inverted) bit
1 = CLCIN0 (inverted) is gated into CLCx Gate 2
0 = CLCIN0 (inverted) is not gated into CLCx Gate 2

© 2017-2021 Microchip Technology Inc.

REGISTER 31-10: CLCxGLS3: GATE 3 LOGIC SELECT REGISTER

R/W-x/u	R/W-x/u	R/W-x/u	R/W-x/u	R/W-x/u	R/W-x/u	R/W-x/u	R/W-x/u
LCxG4D4T	LCxG4D4N	LCxG4D3T	LCxG4D3N	LCxG4D2T	LCxG4D2N	LCxG4D1T	LCxG4D1N
bit 7							bit 0

Legend:		
R = Readable bit	W = Writable bit	U = Unimplemented bit, read as ‘0’
u = Bit is unchanged	x = Bit is unknown	-n/n = Value at POR and BOR/Value at all other Resets
‘1’ = Bit is set	‘0’ = Bit is cleared	

bit 7 **LCxG4D4T:** Gate 3 Data 4 True (noninverted) bit
1 = CLCIN3 (true) is gated into CLCx Gate 3
0 = CLCIN3 (true) is not gated into CLCx Gate 3

bit 6 **LCxG4D4N:** Gate 3 Data 4 Negated (inverted) bit
1 = CLCIN3 (inverted) is gated into CLCx Gate 3
0 = CLCIN3 (inverted) is not gated into CLCx Gate 3

bit 5 **LCxG4D3T:** Gate 3 Data 3 True (noninverted) bit
1 = CLCIN2 (true) is gated into CLCx Gate 3
0 = CLCIN2 (true) is not gated into CLCx Gate 3

bit 4 **LCxG4D3N:** Gate 3 Data 3 Negated (inverted) bit
1 = CLCIN2 (inverted) is gated into CLCx Gate 3
0 = CLCIN2 (inverted) is not gated into CLCx Gate 3

bit 3 **LCxG4D2T:** Gate 3 Data 2 True (noninverted) bit
1 = CLCIN1 (true) is gated into CLCx Gate 3
0 = CLCIN1 (true) is not gated into CLCx Gate 3

bit 2 **LCxG4D2N:** Gate 3 Data 2 Negated (inverted) bit
1 = CLCIN1 (inverted) is gated into CLCx Gate 3
0 = CLCIN1 (inverted) is not gated into CLCx Gate 3

bit 1 **LCxG4D1T:** Gate 4 Data 1 True (noninverted) bit
1 = CLCIN0 (true) is gated into CLCx Gate 3
0 = CLCIN0 (true) is not gated into CLCx Gate 3

bit 0 **LCxG4D1N:** Gate 3 Data 1 Negated (inverted) bit
1 = CLCIN0 (inverted) is gated into CLCx Gate 3
0 = CLCIN0 (inverted) is not gated into CLCx Gate 3

© 2017-2021 Microchip Technology Inc.

REGISTER 31-11: CLCDATA: CLC DATA OUTPUT

U-0	U-0	U-0	U-0	R-0	R-0	R-0	R-0
—	—	—	—	MLC4OUT	MLC3OUT	MLC2OUT	MLC1OUT
bit 7							bit 0

Legend:		
R = Readable bit	W = Writable bit	U = Unimplemented bit, read as ‘0’
u = Bit is unchanged	x = Bit is unknown	-n/n = Value at POR and BOR/Value at all other Resets
‘1’ = Bit is set	‘0’ = Bit is cleared	

bit 7-4 **Unimplemented:** Read as ‘0’

bit 3 **MLC4OUT:** Mirror copy of LC4OUT bit

bit 2 **MLC3OUT:** Mirror copy of LC3OUT bit

bit 1 **MLC2OUT:** Mirror copy of LC2OUT bit

bit 0 **MLC1OUT:** Mirror copy of LC1OUT bit

TABLE 31-4: SUMMARY OF REGISTERS ASSOCIATED WITH CLCx

Name	Bit 7	Bit 6	Bit 5	Bit 4	Bit 3	Bit 2	Bit 1	Bit 0	Register on Page
INTCON	GIE	PEIE	—	—	—	—	—	INTEDG	125
PIR5	CLC4IF	CLC3IF	CLC2IF	CLC1IF	—	—	—	TMR1GIF	139
PIE5	CLC4IE	CLC4IE	CLC2IE	CLC1IE	—	—	—	TMR1GIE	131
CLC1CON	LC1EN	—	LC1OUT	LC1INTP	LC1INTN	LC1MODE[2:0]			366
CLC1POL	LC1POL	—	—	—	LC1G4POL	LC1G3POL	LC1G2POL	LC1G1POL	367
CLC1SEL0	—	—	LC1D1S[5:0]						368
CLC1SEL1	—	—	LC1D2S[5:0]						368
CLC1SEL2	—	—	LC1D3S[5:0]						368
CLC1SEL3	—	—	LC1D4S[5:0]						368
CLC1GLS0	LC1G1D4T	LC1G1D4N	LC1G1D3T	LC1G1D3N	LC1G1D2T	LC1G1D2N	LC1G1D1T	LC1G1D1N	369
CLC1GLS1	LC1G2D4T	LC1G2D4N	LC1G2D3T	LC1G2D3N	LC1G2D2T	LC1G2D2N	LC1G2D1T	LC1G2D1N	370
CLC1GLS2	LC1G3D4T	LC1G3D4N	LC1G3D3T	LC1G3D3N	LC1G3D2T	LC1G3D2N	LC1G3D1T	LC1G3D1N	371
CLC1GLS3	LC1G4D4T	LC1G4D4N	LC1G4D3T	LC1G4D3N	LC1G4D2T	LC1G4D2N	LC1G4D1T	LC1G4D1N	372
CLC2CON	LC2EN	—	LC2OUT	LC2INTP	LC2INTN	LC2MODE[2:0]			366
CLC2POL	LC2POL	—	—	—	LC2G4POL	LC2G3POL	LC2G2POL	LC2G1POL	367
CLC2SEL0	—	—	LC2D1S[5:0]						368
CLC2SEL1	—	—	LC2D2S[5:0]						368
CLC2SEL2	—	—	LC2D3S[5:0]						368
CLC2SEL3	—	—	LC2D4S[5:0]						368
CLC2GLS0	LC2G1D4T	LC2G1D4N	LC2G1D3T	LC2G1D3N	LC2G1D2T	LC2G1D2N	LC2G1D1T	LC2G1D1N	369
CLC2GLS1	LC2G2D4T	LC2G2D4N	LC2G2D3T	LC2G2D3N	LC2G2D2T	LC2G2D2N	LC2G2D1T	LC2G2D1N	370
CLC2GLS2	LC2G3D4T	LC2G3D4N	LC2G3D3T	LC2G3D3N	LC2G3D2T	LC2G3D2N	LC2G3D1T	LC2G3D1N	371
CLC2GLS3	LC2G4D4T	LC2G4D4N	LC2G4D3T	LC2G4D3N	LC2G4D2T	LC2G4D2N	LC2G4D1T	LC2G4D1N	372
CLC3CON	LC3EN	—	LC3OUT	LC3INTP	LC3INTN	LC3MODE[2:0]			366
CLC3POL	LC3POL	—	—	—	LC3G4POL	LC3G3POL	LC3G2POL	LC3G1POL	367
CLC3SEL0	—	—	LC3D1S[5:0]						368
CLC3SEL1	—	—	LC3D2S[5:0]						368
CLC3SEL2	—	—	LC3D3S[5:0]						368
CLC3SEL3	—	—	LC3D4S[5:0]						368
CLC3GLS0	LC3G1D4T	LC3G1D4N	LC3G1D3T	LC3G1D3N	LC3G1D2T	LC3G1D2N	LC3G1D1T	LC3G1D1N	369
CLC3GLS1	LC3G2D4T	LC3G2D4N	LC3G2D3T	LC3G2D3N	LC3G2D2T	LC3G2D2N	LC3G2D1T	LC3G2D1N	370
CLC3GLS2	LC3G3D4T	LC3G3D4N	LC3G3D3T	LC3G3D3N	LC3G3D2T	LC3G3D2N	LC3G3D1T	LC3G3D1N	371
CLC3GLS3	LC3G4D4T	LC3G4D4N	LC3G4D3T	LC3G4D3N	LC3G4D2T	LC3G4D2N	LC3G4D1T	LC3G4D1N	372
CLC4CON	LC4EN	—	LC4OUT	LC4INTP	LC4INTN	LC4MODE[2:0]			366
CLC4POL	LC4POL	—	—	—	LC4G4POL	LC4G3POL	LC4G2POL	LC4G1POL	367
CLC4SEL0	—	—	LC4D1S[5:0]						368
CLC4SEL1	—	—	LC4D2S[5:0]						368
CLC4SEL2	—	—	LC4D3S[5:0]						368
CLC4SEL3	—	—	LC4D4S[5:0]						368
CLC4GLS0	LC4G1D4T	LC4G1D4N	LC4G1D3T	LC4G1D3N	LC4G1D2T	LC4G1D2N	LC4G1D1T	LC4G1D1N	369

Legend: — = unimplemented, read as '0'. Shaded cells are unused by the CLCx modules.

TABLE 31-4: SUMMARY OF REGISTERS ASSOCIATED WITH CLCx (continued)

Name	Bit 7	Bit 6	Bit 5	Bit 4	Bit 3	Bit 2	Bit 1	Bit 0	
CLC4GLS1	LC4G2D4T	LC4G2D4N	LC4G2D3T	LC4G2D3N	LC4G2D2T	LC4G2D2N	LC4G2D1T	LC4G2D1N	370
CLC4GLS2	LC4G3D4T	LC4G3D4N	LC4G3D3T	LC4G3D3N	LC4G3D2T	LC4G3D2N	LC4G3D1T	LC4G3D1N	371
CLC4GLS3	LC4G4D4T	LC4G4D4N	LC4G4D3T	LC4G4D3N	LC4G4D2T	LC4G4D2N	LC4G4D1T	LC4G4D1N	372
CLCIN0PPS	—	—	CLCIN0PPS[5:0]						200
CLCIN1PPS	—	—	CLCIN1PPS[5:0]						200
CLCIN2PPS	—	—	CLCIN2PPS[5:0]						200
CLCIN3PPS	—	—	CLCIN3PPS[5:0]						200

Legend: — = unimplemented, read as '0'. Shaded cells are unused by the CLCx modules.

32.0 HOST SYNCHRONOUS SERIAL PORT (MSSP1) MODULE

32.1 MSSP Module Overview

The Host Synchronous Serial Port (MSSP) module is a serial interface useful for communicating with other peripheral or microcontroller devices. These peripheral devices may be serial EEPROMs, shift registers, display drivers, A/D converters, etc. The MSSP module can operate in one of two modes:

- Serial Peripheral Interface (SPI)
- Inter-Integrated Circuit (I^2C)

The SPI interface supports the following modes and features:

- Host mode
- Client mode
- Clock Parity
- Client Select Synchronization (Client mode only)
- Daisy-chain connection of client devices

Figure 32-1 is a block diagram of the SPI interface module.

FIGURE 32-1: MSSP BLOCK DIAGRAM (SPI MODE)

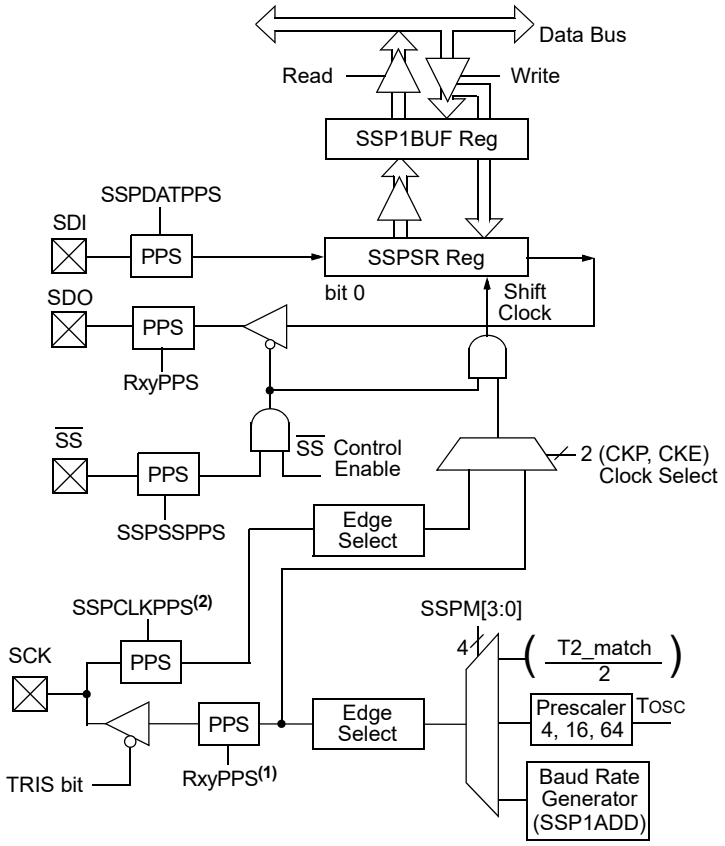

Note 1: Output selection for Host mode.
2: Input selection for Client mode.

The I²C interface supports the following modes and features:

- Host mode
- Client mode
- Byte NACKing (Client mode)
- Limited multi-host support
- 7-bit and 10-bit addressing
- Start and Stop interrupts
- Interrupt masking
- Clock stretching
- Bus collision detection
- General call address matching
- Address masking
- Selectable SDA hold times

Figure 32-2 is a block diagram of the I²C interface module in Host mode. Figure 32-3 is a diagram of the I²C interface module in Client mode.

FIGURE 32-2: MSSP BLOCK DIAGRAM (I²C HOST MODE)

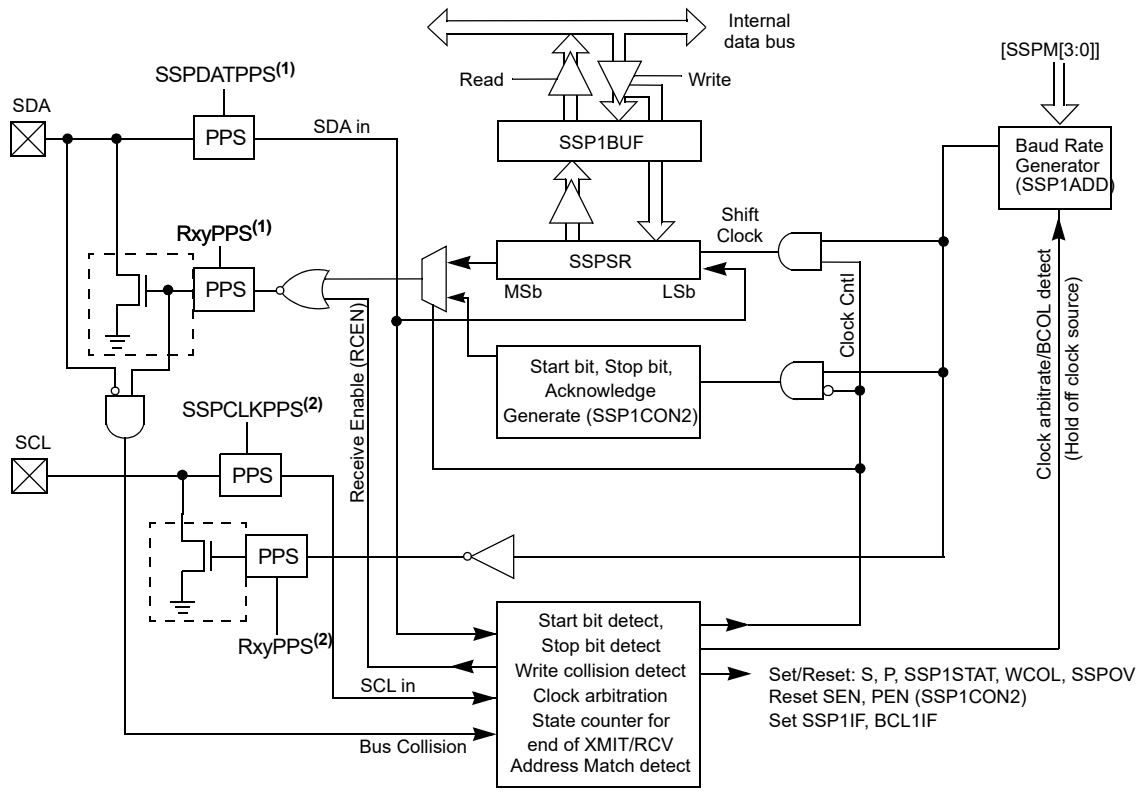

Note 1: SDA pin selections must be the same for input and output.
2: SCL pin selections must be the same for input and output.

FIGURE 32-3: MSSP BLOCK DIAGRAM (I^2C CLIENT MODE)

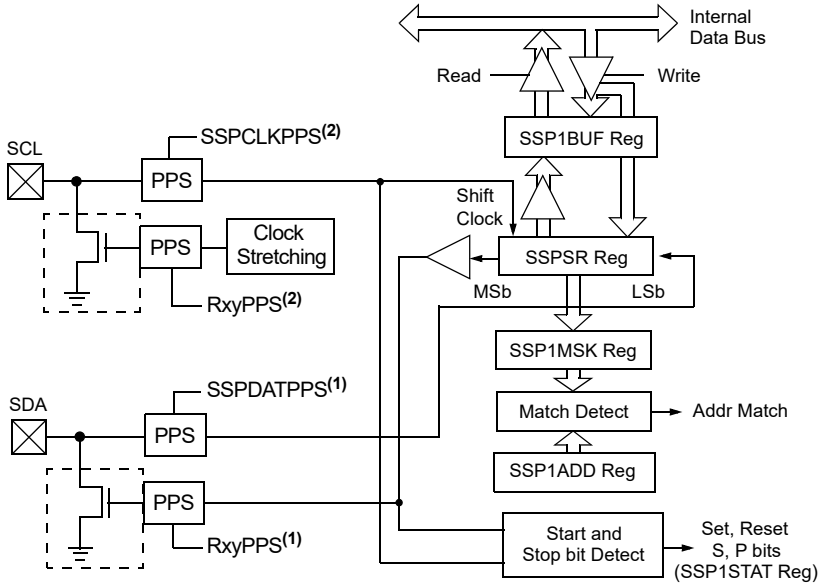

Note 1: SDA pin selections must be the same for input and output.

2: SCL pin selections must be the same for input and output.

32.2 SPI Mode Overview

The Serial Peripheral Interface (SPI) bus is a synchronous serial data communication bus that operates in Full-Duplex mode. Devices communicate in a host/client environment where the host device initiates the communication. A client device is controlled through a Chip Select known as Client Select.

The SPI bus specifies four signal connections:

- Serial Clock (SCK)
- Serial Data Out (SDO)
- Serial Data In (SDI)
- Client Select ($\overline{SS}$)

Figure 32-1 shows the block diagram of the MSSP module when operating in SPI mode.

The SPI bus operates with a single host device and one or more client devices. When multiple client devices are used, an independent Client Select connection is required from the host device to each client device.

Figure 32-4 shows a typical connection between a host device and multiple client devices.

The host selects only one client at a time. Most client devices have tri-state outputs so their output signal appears disconnected from the bus when they are not selected.

Transmissions involve two shift registers, eight bits in size, one in the host and one in the client. Data is always shifted out one bit at a time, with the Most Significant bit (MSb) shifted out first. At the same time, a new Least Significant bit (LSb) is shifted into the same register.

Figure 32-5 shows a typical connection between two processors configured as host and client devices.

Data is shifted out of both shift registers on the programmed clock edge and latched on the opposite edge of the clock.

The host device transmits information out on its SDO output pin which is connected to, and received by, the client's SDI input pin. The client device transmits information out on its SDO output pin, which is connected to, and received by, the host's SDI input pin.

To begin communication, the host device first sends out the clock signal. Both the host and the client devices may be configured for the same clock polarity.

The host device starts a transmission by sending out the MSb from its shift register. The client device reads this bit from that same line and saves it into the LSb position of its shift register.

During each SPI clock cycle, a full-duplex data transmission occurs. This means that while the host device is sending out the MSb from its shift register (on its SDO pin) and the client device is reading this bit and saving it as the LSb of its shift register, that the client device is also sending out the MSb from its shift register (on its SDO pin) and the host device is reading this bit and saving it as the LSb of its shift register.

After eight bits have been shifted out, the host and client have exchanged register values.

If there is more data to exchange, the shift registers are loaded with new data and the process repeats itself.

Whether the data is meaningful or not (dummy data), depends on the application software. This leads to three scenarios for data transmission:

- Host sends useful data and client sends dummy data.
- Host sends useful data and client sends useful data.
- Host sends dummy data and client sends useful data.

Transmissions may involve any number of clock cycles. When there is no more data to be transmitted, the host stops sending the clock signal and it deselects the client.

Every client device connected to the bus that has not been selected through its client select line must disregard the clock and transmission signals and must not transmit out any data of its own.

FIGURE 32-4: SPI HOST AND MULTIPLE CLIENT CONNECTION

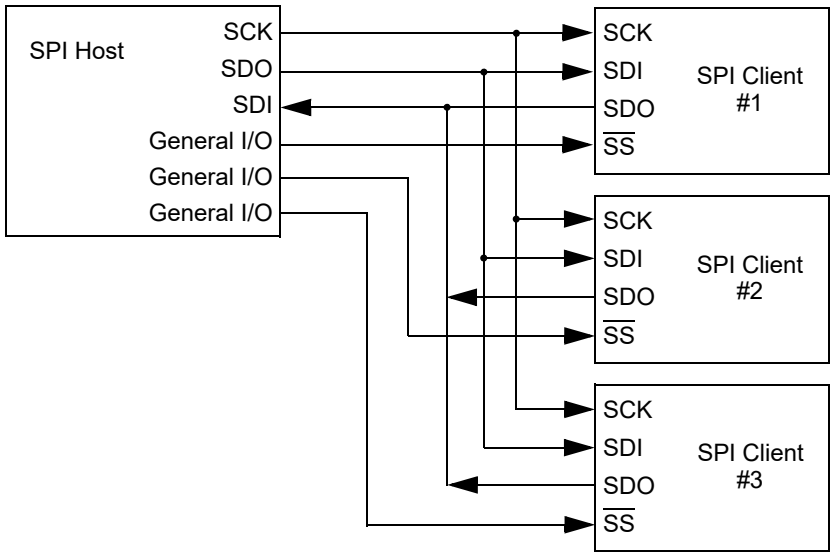

32.2.1 SPI MODE REGISTERS

The MSSP module has five registers for SPI mode operation. These are:

- MSSP STATUS register (SSP1STAT)
- MSSP Control register 1 (SSP1CON1)
- MSSP Control register 3 (SSP1CON3)
- MSSP Data Buffer register (SSP1BUF)
- MSSP Address register (SSP1ADD)
- MSSP Shift register (SSP1SR)
  (Not directly accessible)

SSP1CON1 and SSP1STAT are the control and status registers in SPI mode operation. The SSP1CON1 register is readable and writable. The lower six bits of the SSP1STAT are read-only. The upper two bits of the SSP1STAT are read/write.

In one SPI Host mode, SSP1ADD can be loaded with a value used in the Baud Rate Generator. More information on the Baud Rate Generator is available in **Section 32.7 “Baud Rate Generator”**.

SSP1SR is the shift register used for shifting data in and out. SSP1BUF provides indirect access to the SSP1SR register. SSP1BUF is the buffer register to which data bytes are written, and from which data bytes are read.

In receive operations, SSP1SR and SSP1BUF together create a buffered receiver. When SSP1SR receives a complete byte, it is transferred to SSP1BUF and the SSP1IF interrupt is set.

During transmission, the SSP1BUF is not buffered. A write to SSP1BUF will write to both SSP1BUF and SSP1SR.

32.2.2 SPI MODE OPERATION

When initializing the SPI, several options need to be specified. This is done by programming the appropriate control bits (SSP1CON1[3:0] and SSP1STAT[7:6]). These control bits allow the following to be specified:

- Host mode (SCK is the clock output)
- Client mode (SCK is the clock input)
- Clock Polarity (Idle state of SCK)
- Data Input Sample Phase (middle or end of data output time)
- Clock Edge (output data on rising/falling edge of SCK)
- Clock Rate (Host mode only)
- Client Select mode (Client mode only)

To enable the serial port, SSP Enable bit, SSPEN of the SSP1CON1 register, must be set. To reset or reconfigure SPI mode, clear the SSPEN bit, re-initialize the SSP1CONx registers and then set the SSPEN bit. This configures the SDI, SDO, SCK and $\overline{SS}$ pins as serial port pins. For the pins to behave as the serial port function, some must have their data direction bits (in the TRISx register) appropriately programmed as follows:

- SDI must have corresponding TRIS bit set
- SDO must have corresponding TRIS bit cleared
- SCK (Host mode) must have corresponding TRIS bit cleared
- SCK (Client mode) must have corresponding TRIS bit set
- $\overline{SS}$ must have corresponding TRIS bit set

Any serial port function that is not desired may be overridden by programming the corresponding data direction (TRIS) register to the opposite value.

The MSSP consists of a transmit/receive shift register (SSP1SR) and a buffer register (SSP1BUF). The SSP1SR shifts the data in and out of the device, MSb first. The SSP1BUF holds the data that was written to the SSP1SR until the received data is ready. Once the eight bits of data have been received, that byte is moved to the SSP1BUF register. Then, the Buffer Full Detect bit, BF of the SSP1STAT register, and the interrupt flag bit, SSP1IF, are set. Any write to the SSP1BUF register during transmission/reception of data will be ignored and the write collision detect bit WCOL of the SSP1CON1 register, will be set. User software must clear the WCOL bit to allow the following write(s) to the SSP1BUF register to complete successfully.

When the application software is expecting to receive valid data, the SSP1BUF must be read before the next byte of data to transfer is written to the SSP1BUF. The Buffer Full bit, BF of the SSP1STAT register, indicates when SSP1BUF has been loaded with the received data (transmission is complete). When the SSP1BUF is read, the BF bit is cleared. This data may be irrelevant if the SPI is only a transmitter. Generally, the MSSP interrupt is used to determine when the transmission/reception has completed. If the interrupt method is not going to be used, then software polling can be done to ensure that a write collision does not occur.

The SSP1SR is not directly readable or writable and can only be accessed by addressing the SSP1BUF register.

FIGURE 32-5: SPI HOST/CLIENT CONNECTION

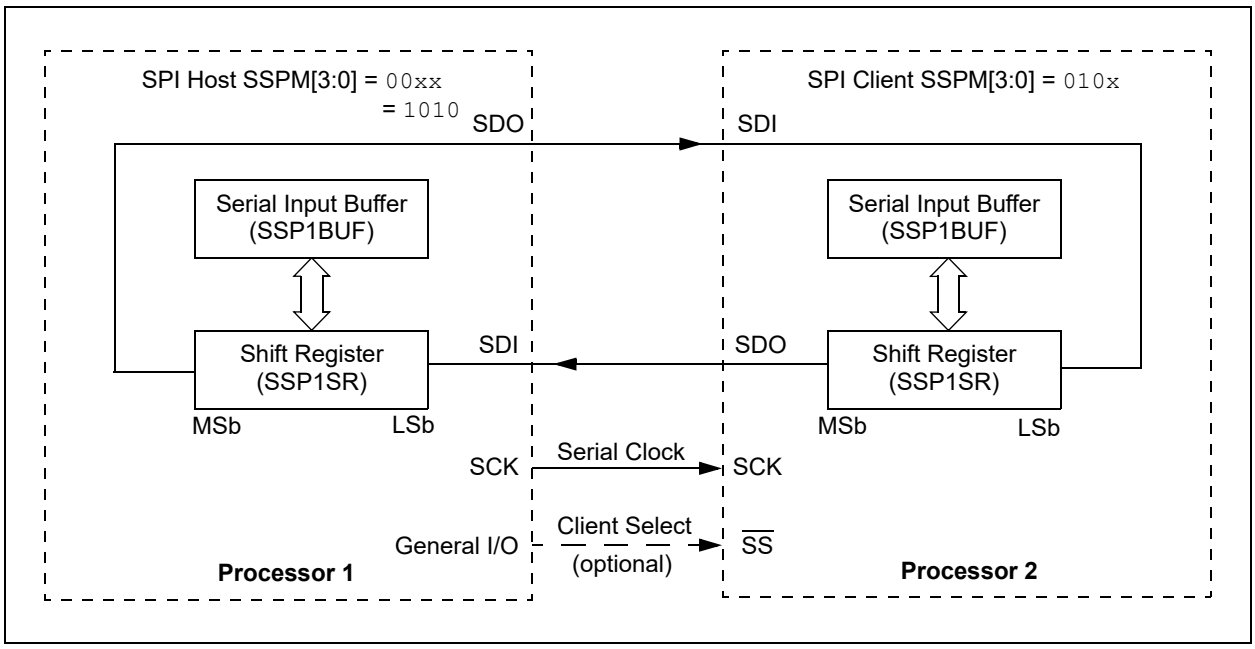

32.2.3 SPI HOST MODE

The host can initiate the data transfer at any time because it controls the SCK line. The host determines when the client (Processor 2, Figure 32-5) is to broadcast data by the software protocol.

In Host mode, the data is transmitted/received as soon as the SSP1BUF register is written to. If the SPI is only going to receive, the SDO output can be disabled (programmed as an input). The SSP1SR register will continue to shift in the signal present on the SDI pin at the programmed clock rate. As each byte is received, it will be loaded into the SSP1BUF register as if a normal received byte (interrupts and Status bits appropriately set).

The clock polarity is selected by appropriately programming the CKP bit of the SSP1CON1 register and the CKE bit of the SSP1STAT register. Then, this will give waveforms for SPI communication as shown in Figure 32-6, Figure 32-8, Figure 32-9 and Figure 32-10, where the MSB is transmitted first. In Host mode, the SPI clock rate (bit rate) is user programmable to be one of the following:

- FOSC/4 (or TCY)
- FOSC/16 (or 4 * TCY)
- FOSC/64 (or 16 * TCY)
- Timer2 output/2
- FOSC/(4 * (SSP1ADD + 1))

Figure 32-6 shows the waveforms for Host mode.

When the CKE bit is set, the SDO data is valid before there is a clock edge on SCK. The change of the input sample is shown based on the state of the SMP bit. The time when the SSP1BUF is loaded with the received data is shown.

FIGURE 32-6: SPI MODE WAVEFORM (HOST MODE)

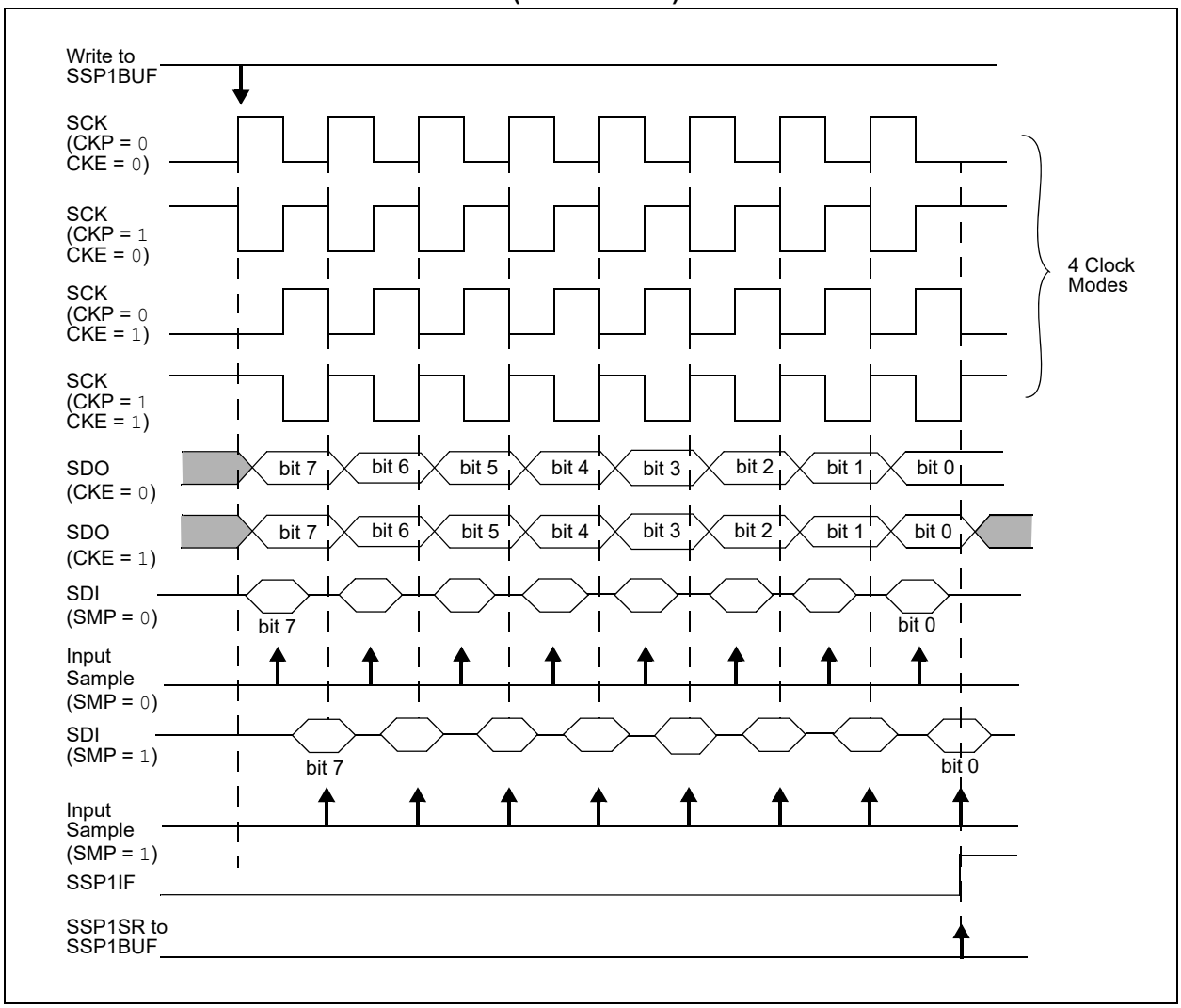

32.2.4 SPI CLIENT MODE

In Client mode, the data is transmitted and received as external clock pulses appear on SCK. When the last bit is latched, the SSP1IF interrupt flag bit is set.

Before enabling the module in SPI Client mode, the clock line must match the proper Idle state. The clock line can be observed by reading the SCK pin. The Idle state is determined by the CKP bit of the SSP1CON1 register.

While in Client mode, the external clock is supplied by the external clock source on the SCK pin. This external clock must meet the minimum high and low times as specified in the electrical specifications.

While in Sleep mode, the client can transmit/receive data. The shift register is clocked from the SCK pin input and when a byte is received, the device will generate an interrupt. If enabled, the device will wake-up from Sleep.

32.2.4.1 Daisy-Chain Configuration

The SPI bus can sometimes be connected in a daisy-chain configuration. The first client output is connected to the second client input, the second client output is connected to the third client input, and so on. The final client output is connected to the host input. Each client sends out, during a second group of clock pulses, an exact copy of what was received during the first group of clock pulses. The whole chain acts as one large communication shift register. The daisy-chain feature only requires a single Client Select line from the host device.

Figure 32-7 shows the block diagram of a typical daisy-chain connection when operating in SPI mode.

In a daisy-chain configuration, only the most recent byte on the bus is required by the client. Setting the BOEN bit of the SSP1CON3 register will enable writes to the SSP1BUF register, even if the previous byte has not been read. This allows the software to ignore data that may not apply to it.

32.2.5 CLIENT SELECT SYNCHRONIZATION

The Client Select can also be used to synchronize communication. The Client Select line is held high until the host device is ready to communicate. When the Client Select line is pulled low, the client knows that a new transmission is starting.

If the client fails to receive the communication properly, it will be reset at the end of the transmission, when the Client Select line returns to a high state. The client is then ready to receive a new transmission when the Client Select line is pulled low again. If the Client Select line is not used, there is a risk that the client will eventually become out of sync with the host. If the client misses a bit, it will always be one bit off in future transmissions. Use of the Client Select line allows the client and host to align themselves at the beginning of each transmission.

The $\overline{SS}$ pin allows a Synchronous Client mode. The SPI must be in Client mode with $\overline{SS}$ pin control enabled (SSP1CON1[3:0] = `0100`).

When the $\overline{SS}$ pin is low, transmission and reception are enabled and the SDO pin is driven.

When the $\overline{SS}$ pin goes high, the SDO pin is no longer driven, even if in the middle of a transmitted byte and becomes a floating output. External pull-up/pull-down resistors may be desirable depending on the application.

Note 1: When the SPI is in Client mode with $\overline{SS}$ pin control enabled (SSP1CON1[3:0] = `0100`), the SPI module will reset if the $\overline{SS}$ pin is set to VDD.

2: When the SPI is used in Client mode with CKE set; the user must enable $\overline{SS}$ pin control.

3: While operated in SPI Client mode the SMP bit of the SSP1STAT register must remain clear.

When the SPI module resets, the bit counter is forced to '`0`'. This can be done by either forcing the $\overline{SS}$ pin to a high level or clearing the SSPEN bit.

FIGURE 32-7: SPI DAISY-CHAIN CONNECTION

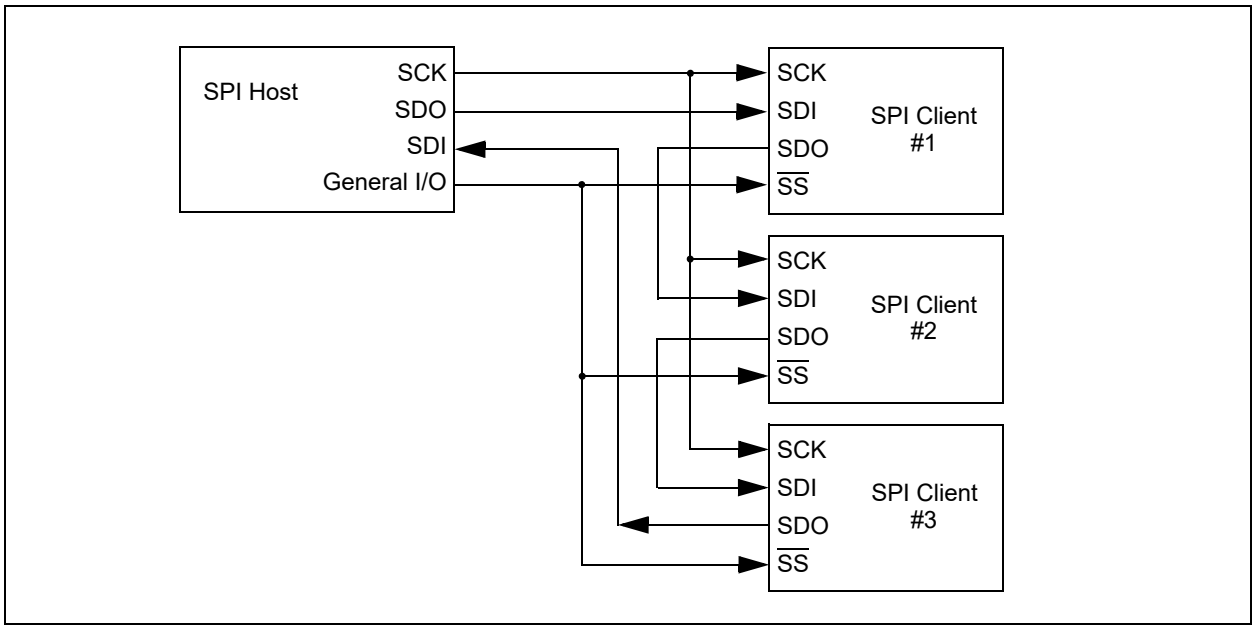

FIGURE 32-8: CLIENT SELECT SYNCHRONOUS WAVEFORM

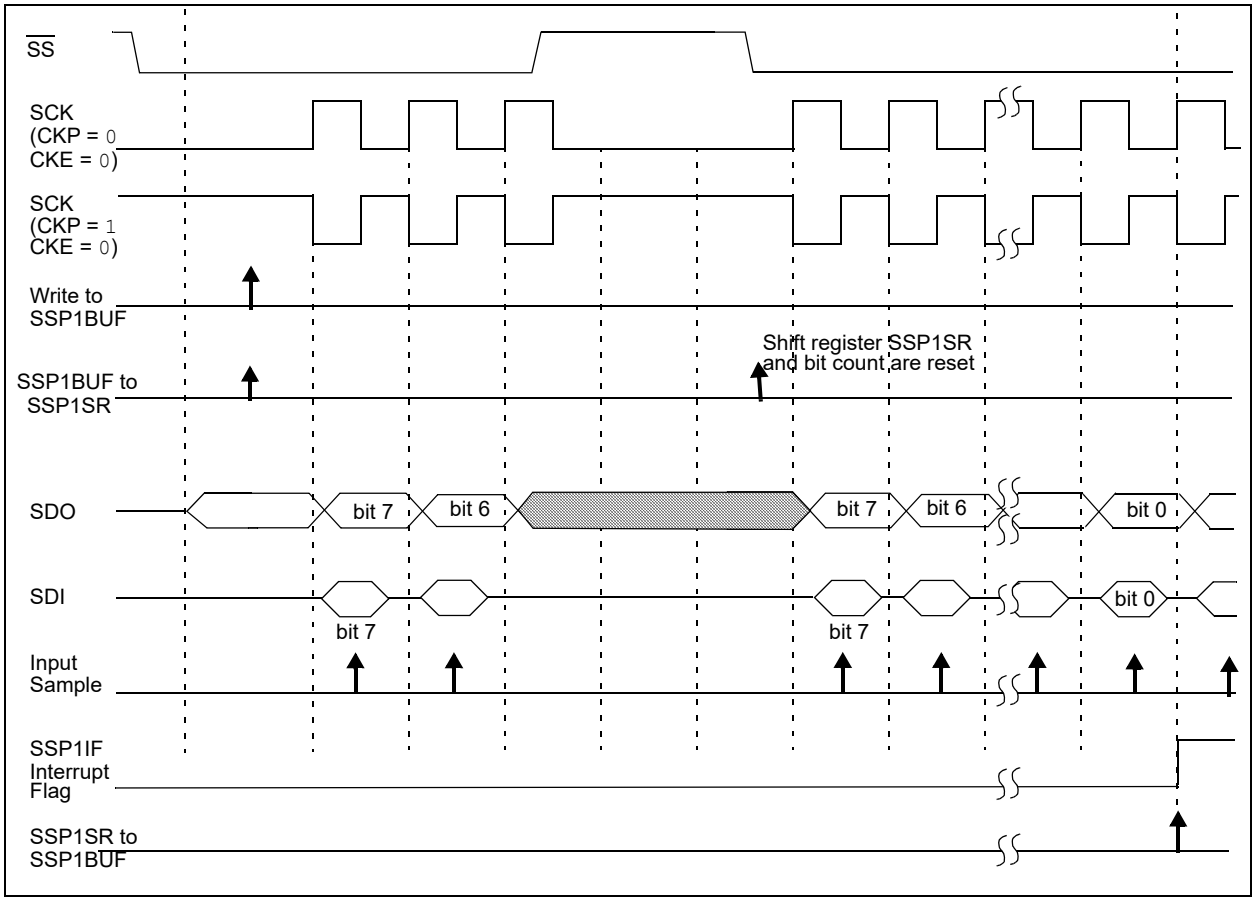

FIGURE 32-9: SPI MODE WAVEFORM (CLIENT MODE WITH CKE = 0)

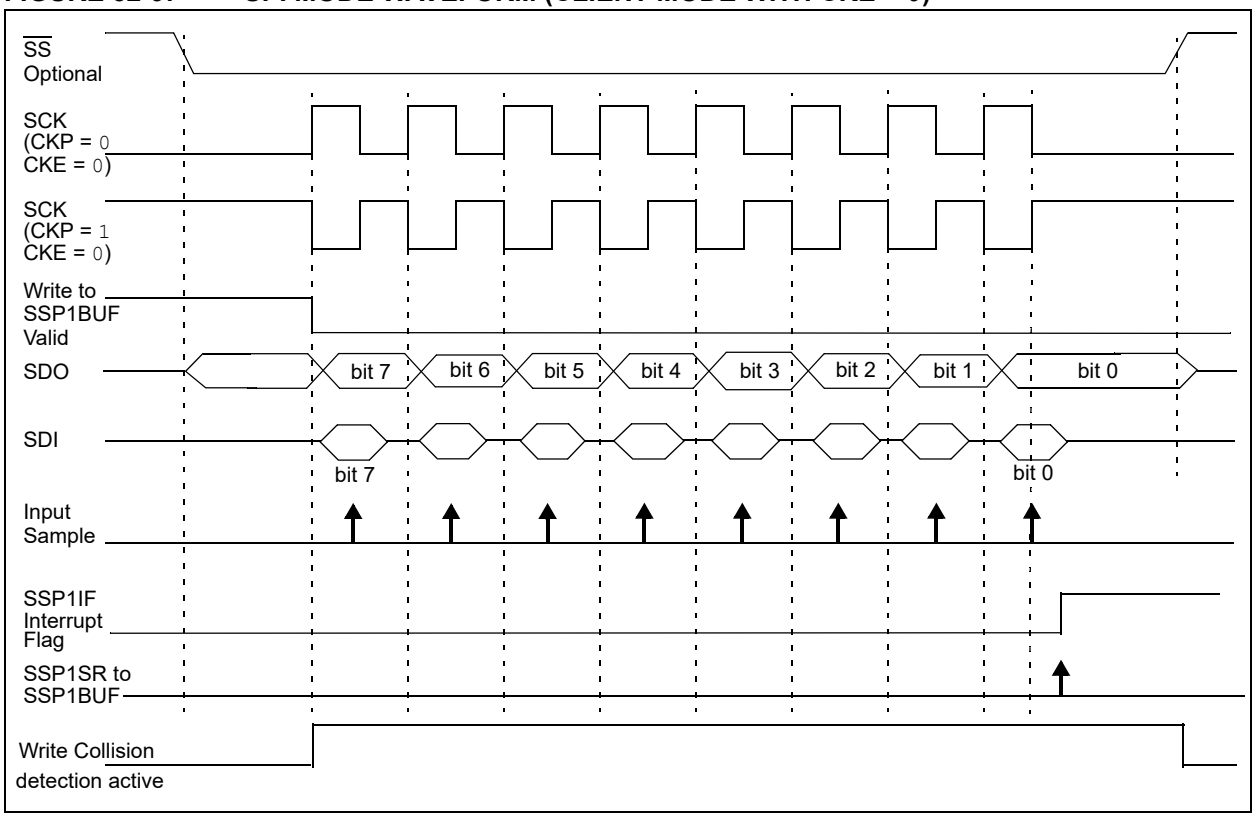

FIGURE 32-10: SPI MODE WAVEFORM (CLIENT MODE WITH CKE = 1)

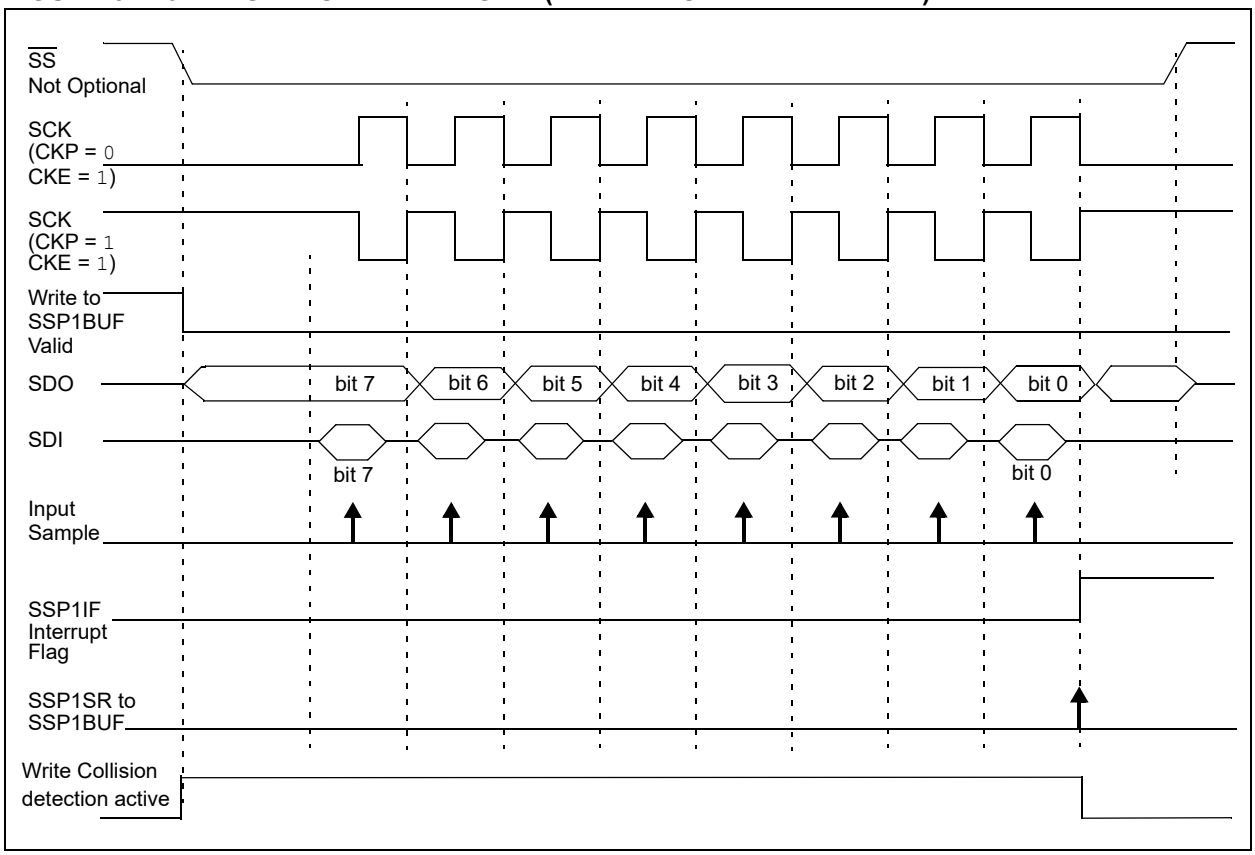

32.2.6 SPI OPERATION IN SLEEP MODE

In SPI Host mode, module clocks may be operating at a different speed than when in Full Power mode; in the case of the Sleep mode, all clocks are halted.

In SPI Host mode, when the Sleep mode is selected, all module clocks are halted and the transmission/reception will remain in that state until the device wakes. After the device returns to Run mode, the module will resume transmitting and receiving data.

In SPI Client mode, the SPI Transmit/Receive Shift register operates asynchronously to the device. This allows the device to be placed in Sleep mode and data to be shifted into the SPI Transmit/Receive Shift register. When all eight bits have been received, the MSSP interrupt flag bit will be set and if enabled, will wake the device.

32.3 I²C MODE OVERVIEW

The Inter-Integrated Circuit (I^2C) bus is a multi-host serial data communication bus. Devices communicate in a host/client environment where the host devices initiate the communication. A client device is controlled through addressing.

The I^2C bus specifies two signal connections:

- Serial Clock (SCL)
- Serial Data (SDA)

Figure 32-11 shows the block diagram of the MSSP module when operating in I^2C mode.

Both the SCL and SDA connections are bidirectional open-drain lines, each requiring pull-up resistors for the supply voltage. Pulling the line to ground is considered a logical zero and letting the line float is considered a logical one.

Figure 32-11 shows a typical connection between two processors configured as host and client devices.

The I^2C bus can operate with one or more host devices and one or more client devices.

There are four potential modes of operation for a given device:

- Host Transmit mode
  (host is transmitting data to a client)
- Host Receive mode
  (host is receiving data from a client)
- Client Transmit mode
  (client is transmitting data to a host)
- Client Receive mode
  (client is receiving data from the host)

To begin communication, a host device starts out in Host Transmit mode. The host device sends out a Start bit followed by the address byte of the client it intends to communicate with.

This is followed by a single Read/Write bit, which determines whether the host intends to transmit to or receive data from the client device.

If the requested client exists on the bus, it will respond with an Acknowledge bit, otherwise known as an $\overline{ACK}$. The host then continues in either Transmit mode or Receive mode and the client continues in the complement, either in Receive mode or Transmit mode, respectively.

FIGURE 32-11: I²C HOST/ CLIENT CONNECTION

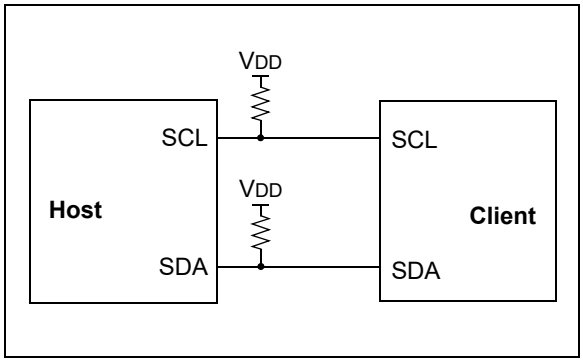

The Acknowledge bit ($\overline{ACK}$) is an active-low signal, which holds the SDA line low to indicate to the transmitter that the client device has received the transmitted data and is ready to receive more.

The transition of a data bit is always performed while the SCL line is held low. Transitions that occur while the SCL line is held high are used to indicate Start and Stop bits.

On the last byte of data communicated, the host device may end the transmission by sending a Stop bit. If the host device is in Receive mode, it sends the Stop bit in place of the last $\overline{ACK}$ bit. A Stop bit is indicated by a low-to-high transition of the SDA line while the SCL line is held high.

In some cases, the host may want to maintain control of the bus and re-initiate another transmission. If so, the host device may send another Start bit in place of the Stop bit.

32.3.1 CLOCK STRETCHING

When a client device has not completed processing data, it can delay the transfer of more data through the process of clock stretching. An addressed client device may hold the SCL clock line low after receiving or sending a bit, indicating that it is not yet ready to continue. The host that is communicating with the client will attempt to raise the SCL line in order to transfer the next bit, but will detect that the clock line has not yet been released. Because the SCL connection is open-drain, the client has the ability to hold that line low until it is ready to continue communicating.

Clock stretching allows receivers that cannot keep up with a transmitter to control the flow of incoming data.

32.3.2 ARBITRATION

Each host device must monitor the bus for Start and Stop bits. If the device detects that the bus is busy, it cannot begin a new message until the bus returns to an Idle state.

However, two host devices may try to initiate a transmission on or about the same time. When this occurs, the process of arbitration begins. Each transmitter checks the level of the SDA data line and compares it to the level that it expects to find. The first transmitter to observe that the two levels do not match, loses arbitration, and must stop transmitting on the SDA line.

For example, if one transmitter holds the SDA line to a logical one (lets it float) and a second transmitter holds it to a logical zero (pulls it low), the result is that the SDA line will be low. The first transmitter then observes that the level of the line is different than expected and concludes that another transmitter is communicating.

The first transmitter to notice this difference is the one that loses arbitration and must stop driving the SDA line. If this transmitter is also a host device, it also must stop driving the SCL line. It then can monitor the lines for a Stop condition before trying to reissue its transmission. In the meantime, the other device that has not noticed any difference between the expected and actual levels on the SDA line continues with its original transmission.

Client Transmit mode can also be arbitrated, when a host addresses multiple clients, but this is less common.

32.4 I^{2}C MODE OPERATION

All MSSP I^{2}C communication is byte oriented and shifted out MSb first. Six SFR registers and two interrupt flags interface the module with the PIC® microcontroller and user software. Two pins, SDA and SCL, are exercised by the module to communicate with other external I^{2}C devices.

32.4.1 BYTE FORMAT

All communication in I^{2}C is done in 9-bit segments. A byte is sent from a host to a client or vice-versa, followed by an Acknowledge bit sent back. After the eighth falling edge of the SCL line, the device outputting data on the SDA changes that pin to an input and reads in an acknowledge value on the next clock pulse.

The clock signal, SCL, is provided by the host. Data is valid to change while the SCL signal is low, and sampled on the rising edge of the clock. Changes on the SDA line while the SCL line is high define special conditions on the bus, explained below.

32.4.2 DEFINITION OF I^{2}C TERMINOLOGY

There is language and terminology in the description of I^{2}C communication that have definitions specific to I^{2}C. That word usage is defined below and may be used in the rest of this document without explanation. This table was adapted from the Philips I^{2}C specification.

32.4.3 SDA AND SCL PINS

Selection of any I^{2}C mode with the SSPEN bit set, forces the SCL and SDA pins to be open-drain. These pins may be set by the user to inputs by setting the appropriate TRIS bits.

Note 1: Any device pin can be selected for SDA and SCL functions with the PPS peripheral. These functions are bidirectional. The SDA input is selected with the SSPDATPPS registers. The SCL input is selected with the SSPCLKPPS registers. Outputs are selected with the RxyPPS registers. It is the user's responsibility to make the selections so that both the input and the output for each function is on the same pin.

32.4.4 SDA HOLD TIME

The hold time of the SDA pin is selected by the SDAHT bit of the SSP1CON3 register. Hold time is the time SDA is held valid after the falling edge of SCL. Setting the SDAHT bit selects a longer 300 ns minimum hold time and may help on buses with large capacitance.

TABLE 32-1: I²C BUS TERMS

TERM	Description
Transmitter	The device which shifts data out onto the bus.
Receiver	The device which shifts data in from the bus.
Host	The device that initiates a transfer, generates clock signals and terminates a transfer.
Client	The device addressed by the host.
Multi-host	A bus with more than one device that can initiate data transfers.
Arbitration	Procedure to ensure that only one host at a time controls the bus. Winning arbitration ensures that the message is not corrupted.
Synchronization	Procedure to synchronize the clocks of two or more devices on the bus.
Idle	No host is controlling the bus, and both SDA and SCL lines are high.
Active	Any time one or more host devices are controlling the bus.
Addressed Client	Client device that has received a matching address and is actively being clocked by a host.
Matching Address	Address byte that is clocked into a client that matches the value stored in SSP1ADD.
Write Request	Client receives a matching address with R/$\overline{W}$ bit clear, and is ready to clock in data.
Read Request	Host sends an address byte with the R/$\overline{W}$ bit set, indicating that it wishes to clock data out of the Client. This data is the next and all following bytes until a Restart or Stop.
Clock Stretching	When a device on the bus hold SCL low to stall communication.
Bus Collision	Any time the SDA line is sampled low by the module while it is outputting and expected high state.

32.4.5 START CONDITION

The I²C specification defines a Start condition as a transition of SDA from a high to a low state while SCL line is high. A Start condition is always generated by the host and signifies the transition of the bus from an Idle to an active state. Figure 32-12 shows wave forms for Start and Stop conditions.

32.4.6 STOP CONDITION

A Stop condition is a transition of the SDA line from low-to-high state while the SCL line is high.

> **Note:** At least one SCL low time must appear before a Stop is valid, therefore, if the SDA line goes low then high again while the SCL line stays high, only the Start condition is detected.

32.4.7 RESTART CONDITION

A Restart is valid any time that a Stop is valid. A host can issue a Restart if it wishes to hold the bus after terminating the current transfer. A Restart has the same effect on the client that a Start would, resetting all client logic and preparing it to clock in an address. The host may want to address the same or another client. Figure 32-13 shows the wave form for a Restart condition.

In 10-bit Addressing Client mode a Restart is required for the host to clock data out of the addressed client. Once a client has been fully addressed, matching both high and low address bytes, the host can issue a Restart and the high address byte with the R/$\overline{W}$ bit set. The client logic will then hold the clock and prepare to clock out data.

32.4.8 START/STOP CONDITION INTERRUPT MASKING

The SCIE and PCIE bits of the SSP1CON3 register can enable the generation of an interrupt in Client modes that do not typically support this function. Client modes where interrupt on Start and Stop detect are already enabled, these bits will have no effect.

FIGURE 32-12: I²C START AND STOP CONDITIONS

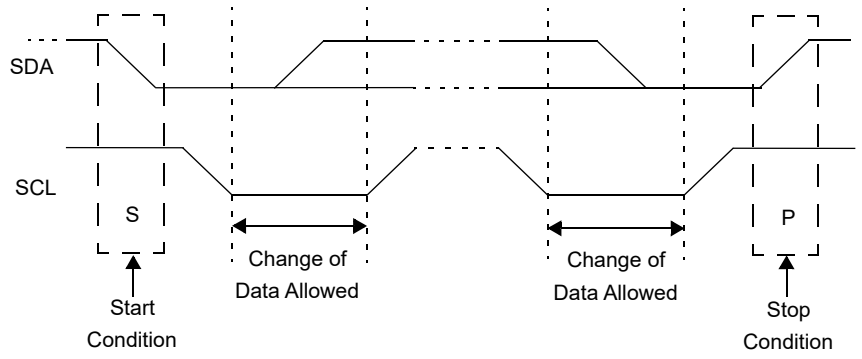

FIGURE 32-13: I²C RESTART CONDITION

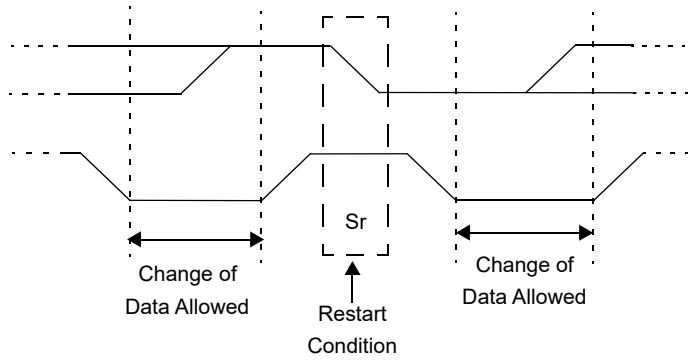

32.4.9 ACKNOWLEDGE SEQUENCE

The 9th SCL pulse for any transferred byte in I²C is dedicated as an Acknowledge. It allows receiving devices to respond back to the transmitter by pulling the SDA line low. The transmitter must release control of the line during this time to shift in the response. The Acknowledge ($\overline{ACK}$) is an active-low signal, pulling the SDA line low indicates to the transmitter that the device has received the transmitted data and is ready to receive more.

The result of an $\overline{ACK}$ is placed in the ACKSTAT bit of the SSP1CON2 register.

Client software, when the AHEN and DHEN bits are set, allow the user to set the $\overline{ACK}$ value sent back to the transmitter. The ACKDT bit of the SSP1CON2 register is set/cleared to determine the response.

There are certain conditions where an $\overline{ACK}$ will not be sent by the client. If the BF bit of the SSP1STAT register or the SSPOV bit of the SSP1CON1 register are set when a byte is received.

When the module is addressed, after the eighth falling edge of SCL on the bus, the ACKTIM bit of the SSP1CON3 register is set. The ACKTIM bit indicates the acknowledge time of the active bus. The ACKTIM Status bit is only active when the AHEN bit or DHEN bit is enabled.

32.5 I²C CLIENT MODE OPERATION

The MSSP Client mode operates in one of four modes selected by the SSPM bits of SSP1CON1 register. The modes can be divided into 7-bit and 10-bit Addressing mode. 10-bit Addressing modes operate the same as 7-bit with some additional overhead for handling the larger addresses.

Modes with Start and Stop bit interrupts operate the same as the other modes with SSP1IF additionally getting set upon detection of a Start, Restart, or Stop condition.

32.5.1 CLIENT MODE ADDRESSES

The SSP1ADD register (Register 32-6) contains the Client mode address. The first byte received after a Start or Restart condition is compared against the value stored in this register. If the byte matches, the value is loaded into the SSP1BUF register and an interrupt is generated. If the value does not match, the module goes Idle and no indication is given to the software that anything happened.

The SSP Mask register (Register 32-5) affects the address matching process. See **Section 32.5.9 "SSP Mask Register"** for more information.

32.5.1.1 I²C Client 7-bit Addressing Mode

In 7-bit Addressing mode, the LSb of the received data byte is ignored when determining if there is an address match.

32.5.1.2 I²C Client 10-bit Addressing Mode

In 10-bit Addressing mode, the first received byte is compared to the binary value of '1 1 1 1 0 A9 A8 0'. A9 and A8 are the two MSb's of the 10-bit address and stored in bits 2 and 1 of the SSP1ADD register.

After the acknowledge of the high byte the UA bit is set and SCL is held low until the user updates SSP1ADD with the low address. The low address byte is clocked in and all eight bits are compared to the low address value in SSP1ADD. Even if there is not an address match; SSP1IF and UA are set, and SCL is held low until SSP1ADD is updated to receive a high byte again. When SSP1ADD is updated the UA bit is cleared. This ensures the module is ready to receive the high address byte on the next communication.

A high and low address match as a write request is required at the start of all 10-bit addressing communication. A transmission can be initiated by issuing a Restart once the client is addressed, and clocking in the high address with the R/$\overline{W}$ bit set. The client hardware will then acknowledge the read request and prepare to clock out data. This is only valid for a client after it has received a complete high and low address byte match.

32.5.2 CLIENT RECEPTION

When the R/$\overline{W}$ bit of a matching received address byte is clear, the R/$\overline{W}$ bit of the SSP1STAT register is cleared. The received address is loaded into the SSP1BUF register and acknowledged.

When the overflow condition exists for a received address, then not Acknowledge is given. An overflow condition is defined as either bit BF of the SSP1STAT register is set, or bit SSPOV of the SSP1CON1 register is set. The BOEN bit of the SSP1CON3 register modifies this operation. For more information see Register 32-4.

An MSSP interrupt is generated for each transferred data byte. Flag bit, SSP1IF, must be cleared by software.

When the SEN bit of the SSP1CON2 register is set, SCL will be held low (clock stretch) following each received byte. The clock must be released by setting the CKP bit of the SSP1CON1 register.

32.5.2.1 7-bit Addressing Reception

This section describes a standard sequence of events for the MSSP module configured as an I²C client in 7-bit Addressing mode. Figure 32-14 and Figure 32-15 is used as a visual reference for this description.

This is a step by step process of what typically must be done to accomplish I²C communication.

1. Start bit detected.
2. The S bit of SSP1STAT is set; SSP1IF is set if interrupt on Start detect is enabled.
3. Matching address with R/$\overline{W}$ bit clear is received.
4. The client pulls SDA low sending an $\overline{ACK}$ to the host, and sets SSP1IF bit.
5. Software clears the SSP1IF bit.
6. Software reads received address from SSP1BUF clearing the BF flag.
7. If SEN = `1`; Client software sets CKP bit to release the SCL line.
8. The host clocks out a data byte.
9. Client drives SDA low sending an $\overline{ACK}$ to the host, and sets SSP1IF bit.
10. Software clears SSP1IF.
11. Software reads the received byte from SSP1BUF clearing BF.
12. Steps 8-12 are repeated for all received bytes from the host.
13. Host sends Stop condition, setting the P bit of SSP1STAT, and the bus goes Idle.

32.5.2.2 7-bit Reception with AHEN and DHEN

Client device reception with AHEN and DHEN set operate the same as without these options with extra interrupts and clock stretching added after the eighth falling edge of SCL. These additional interrupts allows time for the client software to decide whether it wants to $\overline{\text{ACK}}$ the receive address or data byte.

This list describes the steps that need to be taken by client software to use these options for I^2C communication. Figure 32-16 displays a module using both address and data holding. Figure 32-17 includes the operation with the SEN bit of the SSP1CON2 register set.

1. The S bit of SSP1STAT is set; SSP1IF is set if interrupt on Start detect is enabled.
2. Matching address with R/$\overline{\text{W}}$ bit clear is clocked in. SSP1IF is set and CKP cleared after the eighth falling edge of SCL.
3. Client clears the SSP1IF.
4. Client can look at the ACKTIM bit of the SSP1CON3 register to determine if the SSP1IF was after or before the $\overline{\text{ACK}}$.
5. Client reads the address value from SSP1BUF, clearing the BF flag.
6. Client sets $\overline{\text{ACK}}$ value clocked out to the host by setting ACKDT.
7. Client releases the clock by setting CKP.
8. SSP1IF is set after an $\overline{\text{ACK}}$, not after a NACK.
9. If SEN = `1` the client hardware will stretch the clock after the $\overline{\text{ACK}}$.
10. Client clears SSP1IF.

> **Note:** SSP1IF is still set after the ninth falling edge of SCL even if there is no clock stretching and BF has been cleared. Only if NACK is sent to host is SSP1IF not set.

11. SSP1IF set and CKP cleared after eighth falling edge of SCL for a received data byte.
12. Client looks at ACKTIM bit of SSP1CON3 to determine the source of the interrupt.
13. Client reads the received data from SSP1BUF clearing BF.
14. Steps 7-14 are the same for each received data byte.
15. Communication is ended by either the client sending an $\overline{\text{ACK}}$ = `1`, or the host sending a Stop condition. If a Stop is sent and Interrupt on Stop Detect is disabled, the client will only know by polling the P bit of the SSP1STAT register.

FIGURE 32-14: I²C CLIENT, 7-BIT ADDRESS, RECEPTION (SEN = 0, AHEN = 0, DHEN = 0)

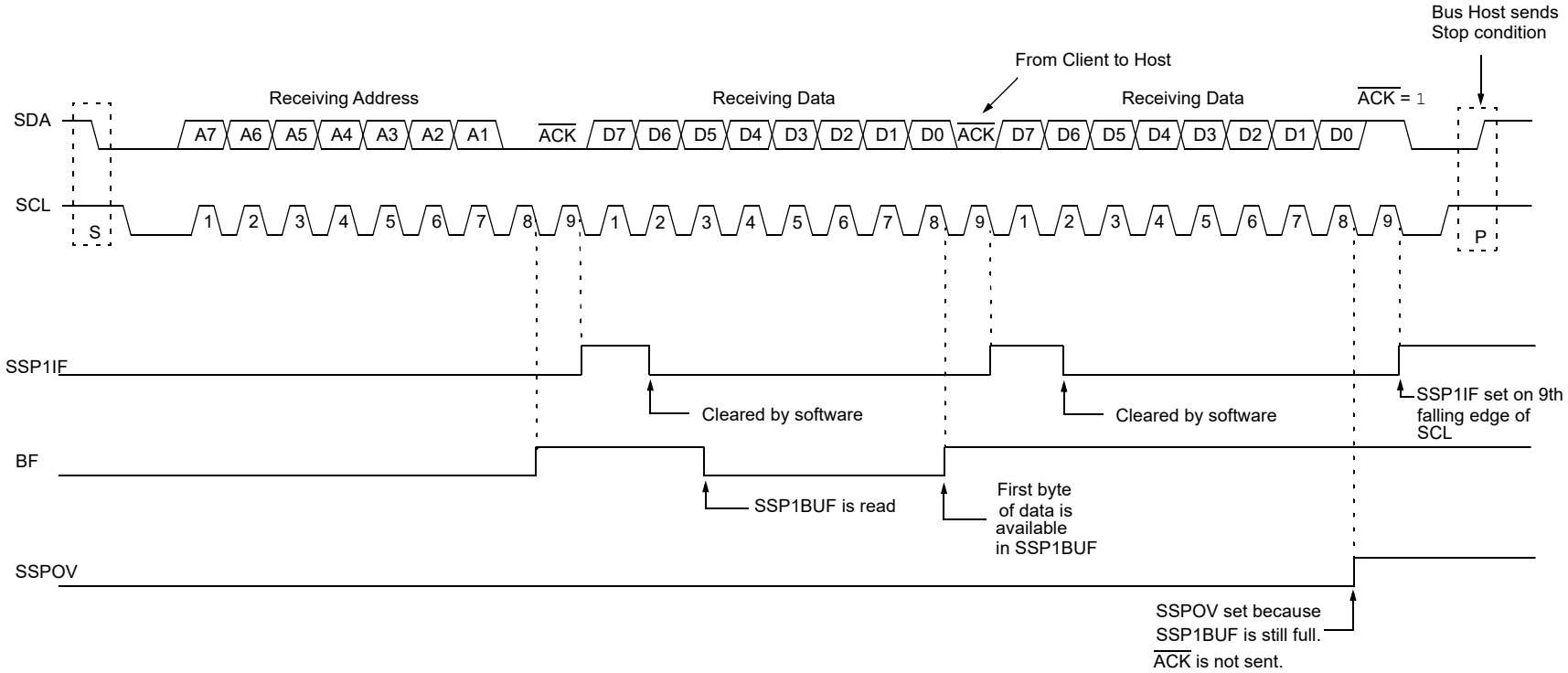

© 2017-2021 Microchip Technology Inc.

FIGURE 32-15: I²C CLIENT, 7-BIT ADDRESS, RECEPTION (SEN = 1, AHEN = 0, DHEN = 0)

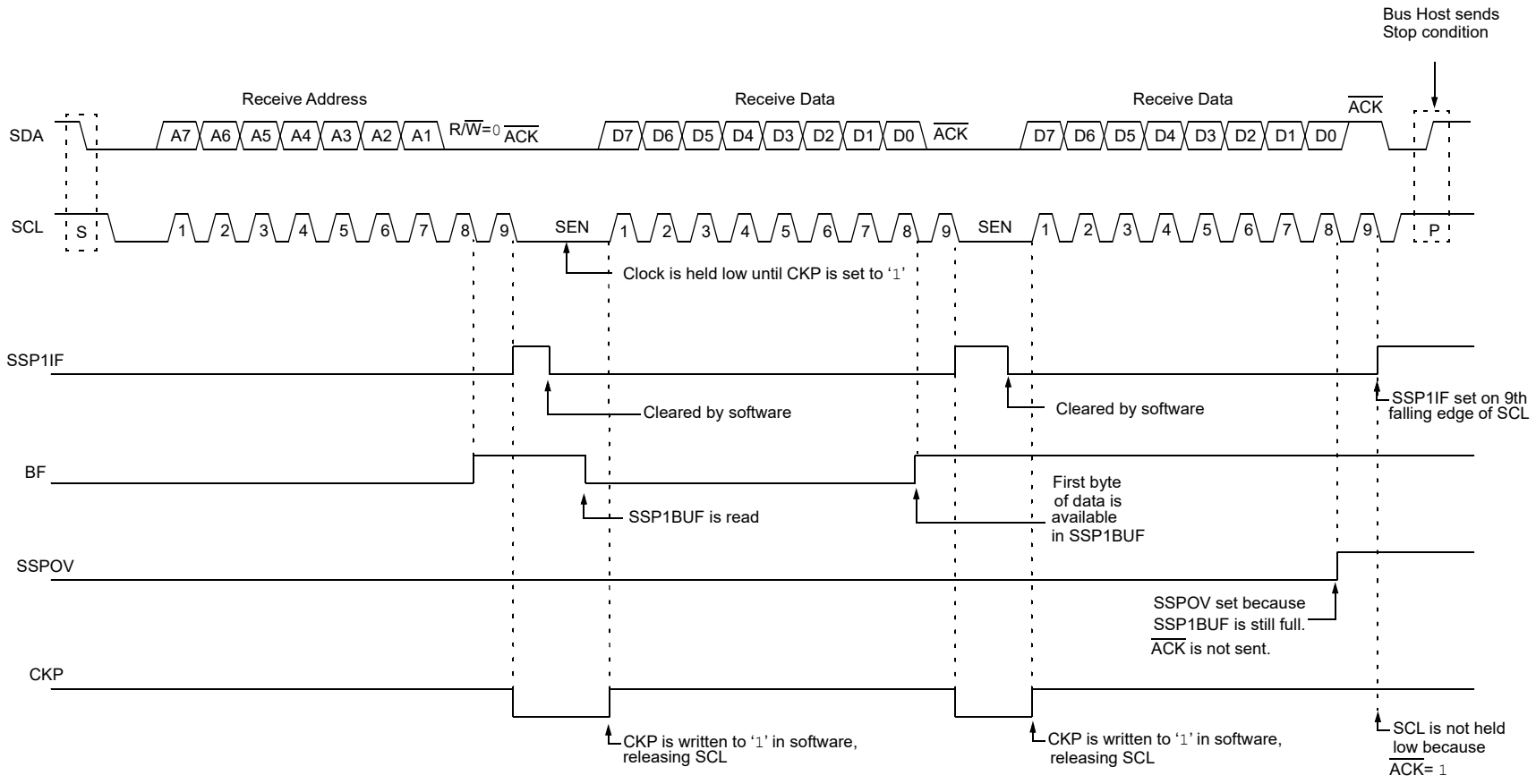

© 2017-2021 Microchip Technology Inc.

FIGURE 32-16: I²C CLIENT, 7-BIT ADDRESS, RECEPTION (SEN = 0, AHEN = 1, DHEN = 1)

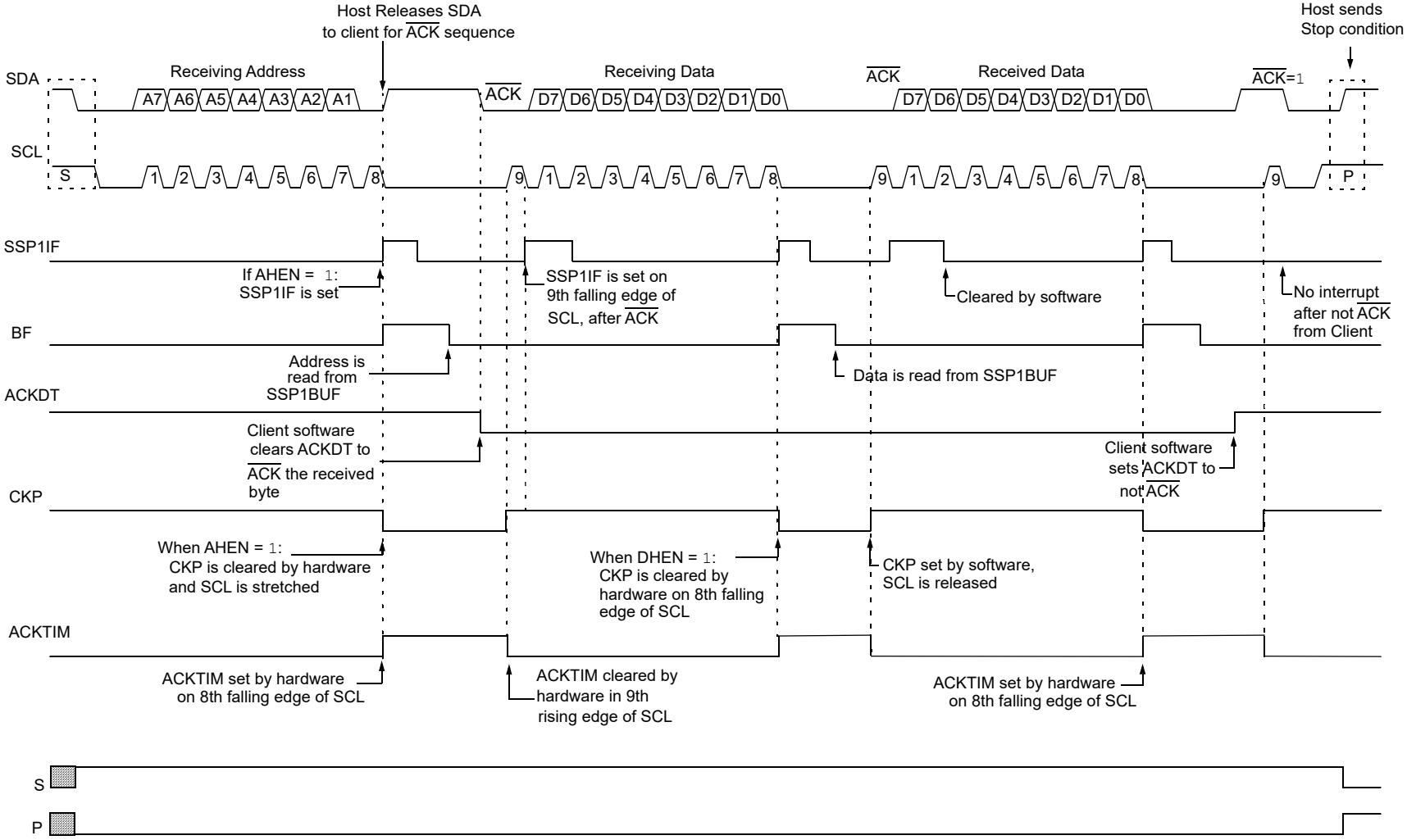

© 2017-2021 Microchip Technology Inc.

FIGURE 32-17: I²C CLIENT, 7-BIT ADDRESS, RECEPTION (SEN = 1, AHEN = 1, DHEN = 1)

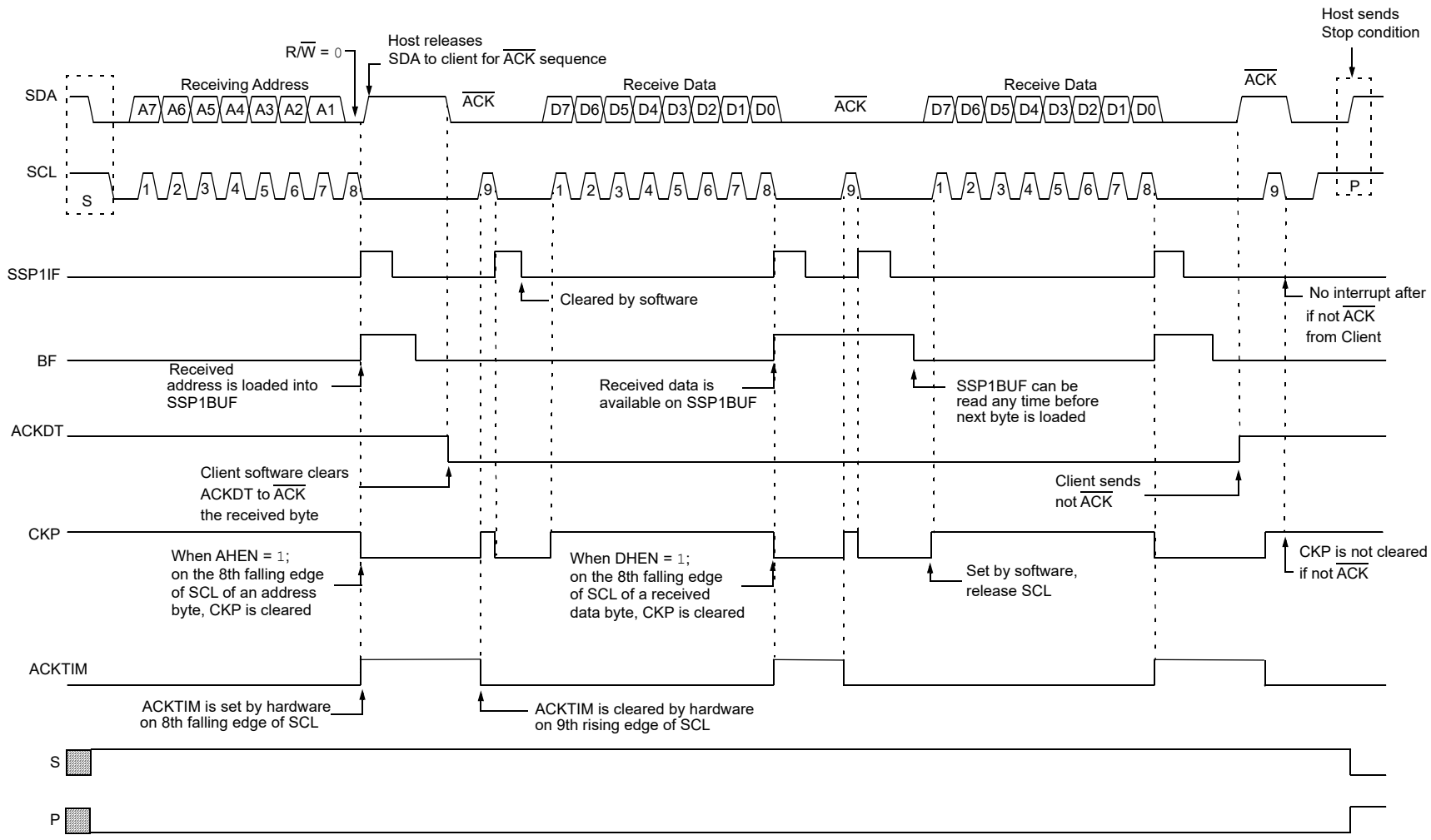

© 2017-2021 Microchip Technology Inc.

32.5.3 CLIENT TRANSMISSION

When the R/$\overline{W}$ bit of the incoming address byte is set and an address match occurs, the R/$\overline{W}$ bit of the SSP1STAT register is set. The received address is loaded into the SSP1BUF register, and an $\overline{ACK}$ pulse is sent by the client on the ninth bit.

Following the $\overline{ACK}$, client hardware clears the CKP bit and the SCL pin is held low (see **Section 32.5.6 "Clock Stretching"** for more details). By stretching the clock, the host will be unable to assert another clock pulse until the client is done preparing the transmit data.

The transmit data must be loaded into the SSP1BUF register which also loads the SSP1SR register. Then the SCL pin may be released by setting the CKP bit of the SSP1CON1 register. The eight data bits are shifted out on the falling edge of the SCL input. This ensures that the SDA signal is valid during the SCL high time.

The $\overline{ACK}$ pulse from the host-receiver is latched on the rising edge of the ninth SCL input pulse. This $\overline{ACK}$ value is copied to the ACKSTAT bit of the SSP1CON2 register. If ACKSTAT is set (not $\overline{ACK}$), then the data transfer is complete. In this case, when the not $\overline{ACK}$ is latched by the client, the client goes Idle and waits for another occurrence of the Start bit. If the SDA line was low ($\overline{ACK}$), the next transmit data must be loaded into the SSP1BUF register. Again, the SCL pin must be released by setting bit CKP.

An MSSP interrupt is generated for each data transfer byte. The SSP1IF bit must be cleared by software and the SSP1STAT register is used to determine the status of the byte. The SSP1IF bit is set on the falling edge of the ninth clock pulse.

32.5.3.1 Client Mode Bus Collision

A client receives a read request and begins shifting data out on the SDA line. If a bus collision is detected and the SBCDE bit of the SSP1CON3 register is set, the BCL1IF bit of the PIR3 register is set. Once a bus collision is detected, the client goes Idle and waits to be addressed again. User software can use the BCL1IF bit to handle a client bus collision.

32.5.3.2 7-bit Transmission

A host device can transmit a read request to a client, and then clock data out of the client. The list below outlines what software for a client will need to do to accomplish a standard transmission. Figure 32-18 can be used as a reference to this list.

1. Host sends a Start condition on SDA and SCL.
2. The S bit of SSP1STAT is set; SSP1IF is set if interrupt on Start detect is enabled.
3. Matching address with R/$\overline{W}$ bit set is received by the Client setting SSP1IF bit.
4. Client hardware generates an $\overline{ACK}$ and sets SSP1IF.
5. SSP1IF bit is cleared by user.
6. Software reads the received address from SSP1BUF, clearing BF.
7. R/$\overline{W}$ is set so CKP was automatically cleared after the $\overline{ACK}$.
8. The client software loads the transmit data into SSP1BUF.
9. CKP bit is set releasing SCL, allowing the host to clock the data out of the client.
10. SSP1IF is set after the $\overline{ACK}$ response from the host is loaded into the ACKSTAT register.
11. SSP1IF bit is cleared.
12. The client software checks the ACKSTAT bit to see if the host wants to clock out more data.

Note 1: If the host $\overline{ACK}$s the clock will be stretched.

2: ACKSTAT is the only bit updated on the rising edge of SCL (9th) rather than the falling.

13. Steps 9-13 are repeated for each transmitted byte.
14. If the host sends a not $\overline{ACK}$; the clock is not held, but SSP1IF is still set.
15. The host sends a Restart condition or a Stop.
16. The client is no longer addressed.

FIGURE 32-18: I²C CLIENT, 7-BIT ADDRESS, TRANSMISSION (AHEN = 0)

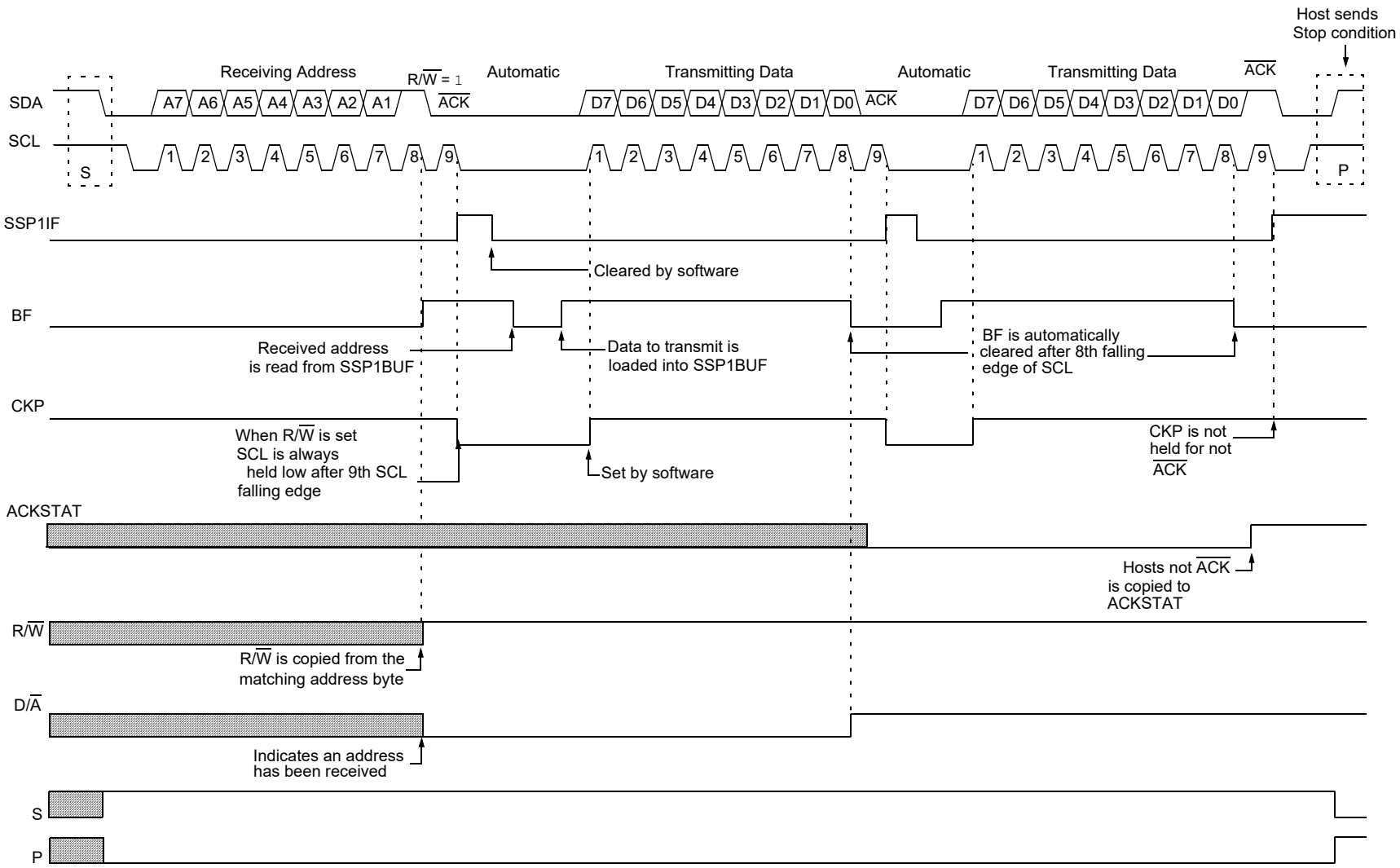

© 2017-2021 Microchip Technology Inc.

32.5.3.3 7-bit Transmission with Address Hold Enabled

Setting the AHEN bit of the SSP1CON3 register enables additional clock stretching and interrupt generation after the eighth falling edge of a received matching address. Once a matching address has been clocked in, CKP is cleared and the SSP1IF interrupt is set.

Figure 32-19 displays a standard waveform of a 7-bit address client transmission with AHEN enabled.

1. Bus starts Idle.
2. Host sends Start condition; the S bit of SSP1STAT is set; SSP1IF is set if interrupt on Start detect is enabled.
3. Host sends matching address with R/$\overline{W}$ bit set. After the eighth falling edge of the SCL line the CKP bit is cleared and SSP1IF interrupt is generated.
4. Client software clears SSP1IF.
5. Client software reads ACKTIM bit of SSP1CON3 register, and R/$\overline{W}$ and D/$\overline{A}$ of the SSP1STAT register to determine the source of the interrupt.
6. Client reads the address value from the SSP1BUF register clearing the BF bit.
7. Client software decides from this information if it wishes to $\overline{ACK}$ or not $\overline{ACK}$ and sets the ACKDT bit of the SSP1CON2 register accordingly.
8. Client sets the CKP bit releasing SCL.
9. Host clocks in the $\overline{ACK}$ value from the client.
10. Client hardware automatically clears the CKP bit and sets SSP1IF after the $\overline{ACK}$ if the R/$\overline{W}$ bit is set.
11. Client software clears SSP1IF.
12. Client loads value to transmit to the host into SSP1BUF setting the BF bit.

> **Note:** SSP1BUF cannot be loaded until after the $\overline{ACK}$.

13. Client sets the CKP bit releasing the clock.
14. Host clocks out the data from the client and sends an $\overline{ACK}$ value on the ninth SCL pulse.
15. Client hardware copies the $\overline{ACK}$ value into the ACKSTAT bit of the SSP1CON2 register.
16. Steps 10-15 are repeated for each byte transmitted to the host from the client.
17. If the host sends a not $\overline{ACK}$ the client releases the bus allowing the host to send a Stop and end the communication.

> **Note:** Host must send a not $\overline{ACK}$ on the last byte to ensure that the client releases the SCL line to receive a Stop.

FIGURE 32-19: I²C CLIENT, 7-BIT ADDRESS, TRANSMISSION (AHEN = 1)

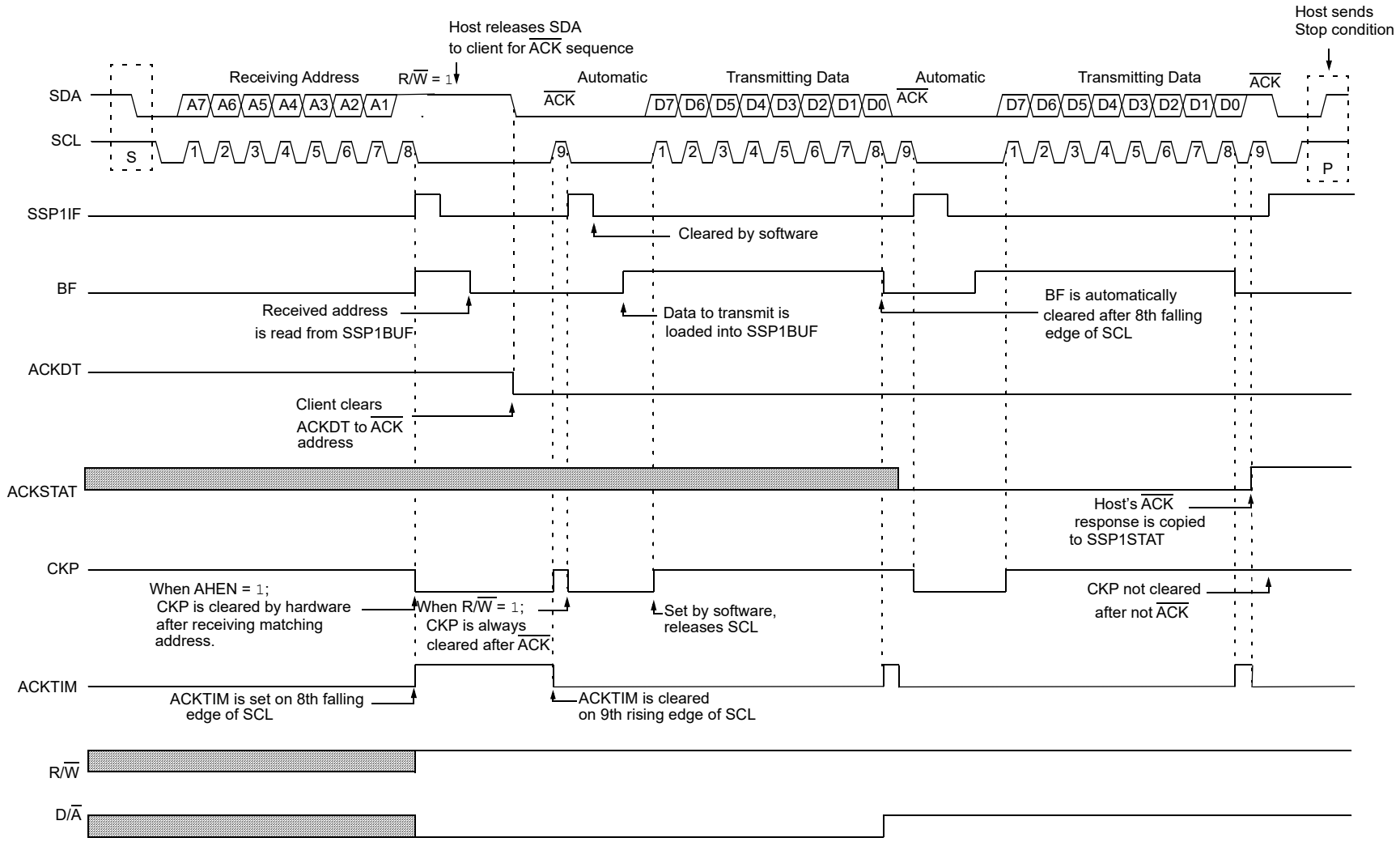

© 2017-2021 Microchip Technology Inc.

32.5.4 CLIENT MODE 10-BIT ADDRESS RECEPTION

This section describes a standard sequence of events for the MSSP module configured as an I^2C client in 10-bit Addressing mode.

Figure 32-20 is used as a visual reference for this description.

This is a step by step process of what must be done by client software to accomplish I^2C communication.

1. Bus starts Idle.
2. Host sends Start condition; S bit of SSP1STAT is set; SSP1IF is set if interrupt on Start detect is enabled.
3. Host sends matching high address with R/$\overline{W}$ bit clear; UA bit of the SSP1STAT register is set.
4. Client sends $\overline{ACK}$ and SSP1IF is set.
5. Software clears the SSP1IF bit.
6. Software reads received address from SSP1BUF clearing the BF flag.
7. Client loads low address into SSP1ADD, releasing SCL.
8. Host sends matching low address byte to the client; the UA bit is set.

> **Note:** Updates to the SSP1ADD register are not allowed until after the $\overline{ACK}$ sequence.

9. Client sends $\overline{ACK}$ and SSP1IF is set.

> **Note:** If the low address does not match, SSP1IF and UA are still set so that the client software can set SSP1ADD back to the high address. BF is not set because there is no match. CKP is unaffected.

10. Client clears SSP1IF.
11. Client reads the received matching address from SSP1BUF clearing BF.
12. Client loads high address into SSP1ADD.
13. Host clocks a data byte to the client and clocks out the clients $\overline{ACK}$ on the ninth SCL pulse; SSP1IF is set.
14. If SEN bit of SSP1CON2 is set, CKP is cleared by hardware and the clock is stretched.
15. Client clears SSP1IF.
16. Client reads the received byte from SSP1BUF clearing BF.
17. If SEN is set the client sets CKP to release the SCL.
18. Steps 13-17 repeat for each received byte.
19. Host sends Stop to end the transmission.

32.5.5 10-BIT ADDRESSING WITH ADDRESS OR DATA HOLD

Reception using 10-bit addressing with AHEN or DHEN set is the same as with 7-bit modes. The only difference is the need to update the SSP1ADD register using the UA bit. All functionality, specifically when the CKP bit is cleared and SCL line is held low are the same. Figure 32-21 can be used as a reference of a client in 10-bit addressing with AHEN set.

Figure 32-22 shows a standard waveform for a client transmitter in 10-bit Addressing mode.

FIGURE 32-20: I²C CLIENT, 10-BIT ADDRESS, RECEPTION (SEN = 1, AHEN = 0, DHEN = 0)

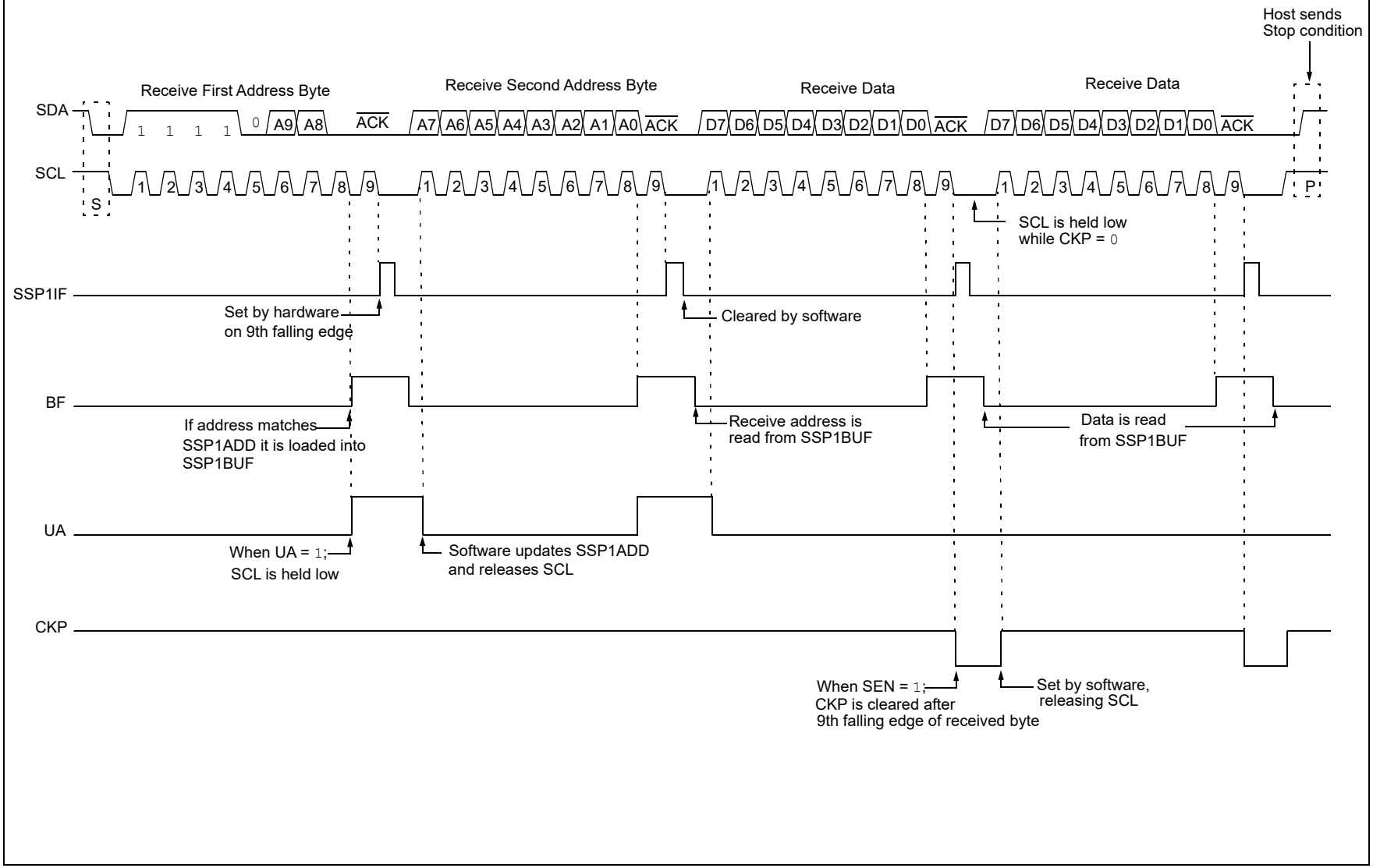

© 2017-2021 Microchip Technology Inc.

FIGURE 32-21: I²C CLIENT, 10-BIT ADDRESS, RECEPTION (SEN = 0, AHEN = 1, DHEN = 0)

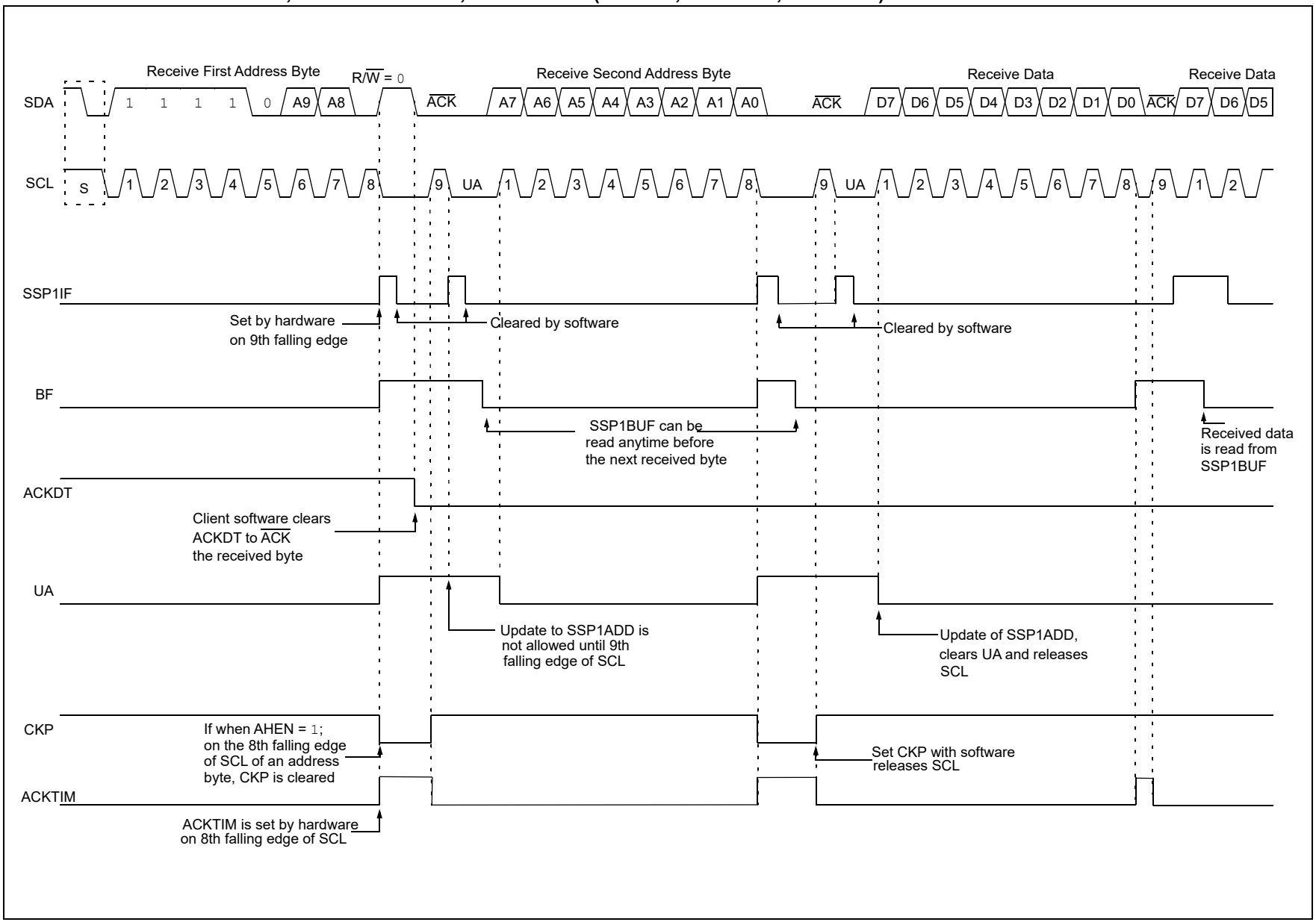

© 2017-2021 Microchip Technology Inc.

FIGURE 32-22: I²C CLIENT, 10-BIT ADDRESS, TRANSMISSION (SEN = 0, AHEN = 0, DHEN = 0)

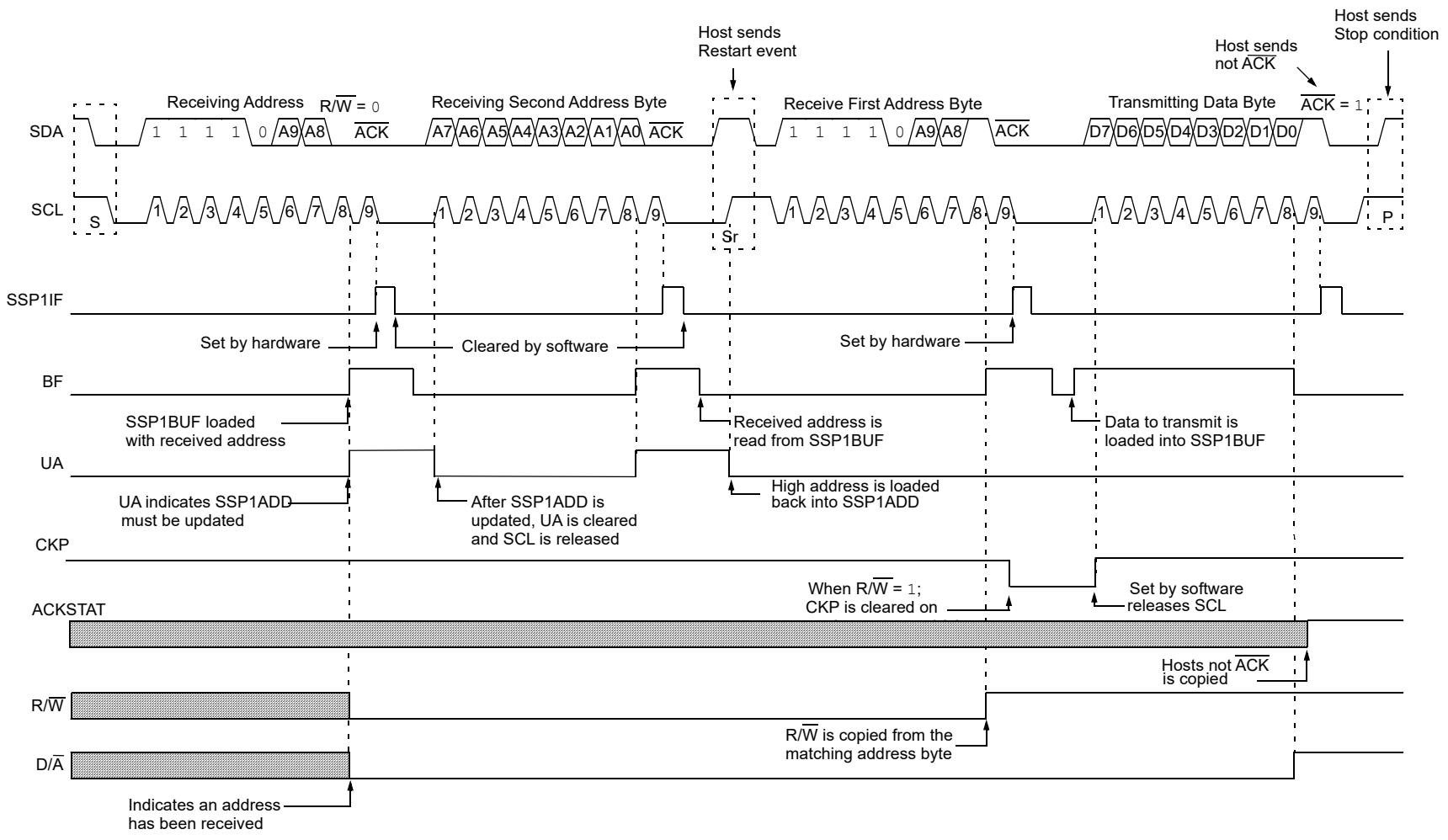

© 2017-2021 Microchip Technology Inc.

32.5.6 CLOCK STRETCHING

Clock stretching occurs when a device on the bus holds the SCL line low, effectively pausing communication. The client may stretch the clock to allow more time to handle data or prepare a response for the host device. A host device is not concerned with stretching as anytime it is active on the bus and not transferring data it is stretching. Any stretching done by a client is invisible to the host software and handled by the hardware that generates SCL.

The CKP bit of the SSP1CON1 register is used to control stretching in software. Any time the CKP bit is cleared, the module will wait for the SCL line to go low and then hold it. Setting CKP will release SCL and allow more communication.

32.5.6.1 Normal Clock Stretching

Following an $\overline{\text{ACK}}$ if the R/$\overline{\text{W}}$ bit of SSP1STAT is set, a read request, the client hardware will clear CKP. This allows the client time to update SSP1BUF with data to transfer to the host. If the SEN bit of SSP1CON2 is set, the client hardware will always stretch the clock after the $\overline{\text{ACK}}$ sequence. Once the client is ready; CKP is set by software and communication resumes.

32.5.6.2 10-bit Addressing Mode

In 10-bit Addressing mode, when the UA bit is set the clock is always stretched. This is the only time the SCL is stretched without CKP being cleared. SCL is released immediately after a write to SSP1ADD.

32.5.6.3 Byte NACKing

When AHEN bit of SSP1CON3 is set; CKP is cleared by hardware after the eighth falling edge of SCL for a received matching address byte. When DHEN bit of SSP1CON3 is set; CKP is cleared after the eighth falling edge of SCL for received data.

Stretching after the eighth falling edge of SCL allows the client to look at the received address or data and decide if it wants to ACK the received data.

32.5.7 CLOCK SYNCHRONIZATION AND THE CKP BIT

Any time the CKP bit is cleared, the module will wait for the SCL line to go low and then hold it. However, clearing the CKP bit will not assert the SCL output low until the SCL output is already sampled low. Therefore, the CKP bit will not assert the SCL line until an external I^2C host device has already asserted the SCL line. The SCL output will remain low until the CKP bit is set and all other devices on the I^2C bus have released SCL. This ensures that a write to the CKP bit will not violate the minimum high time requirement for SCL (see Figure 32-23).

FIGURE 32-23: CLOCK SYNCHRONIZATION TIMING

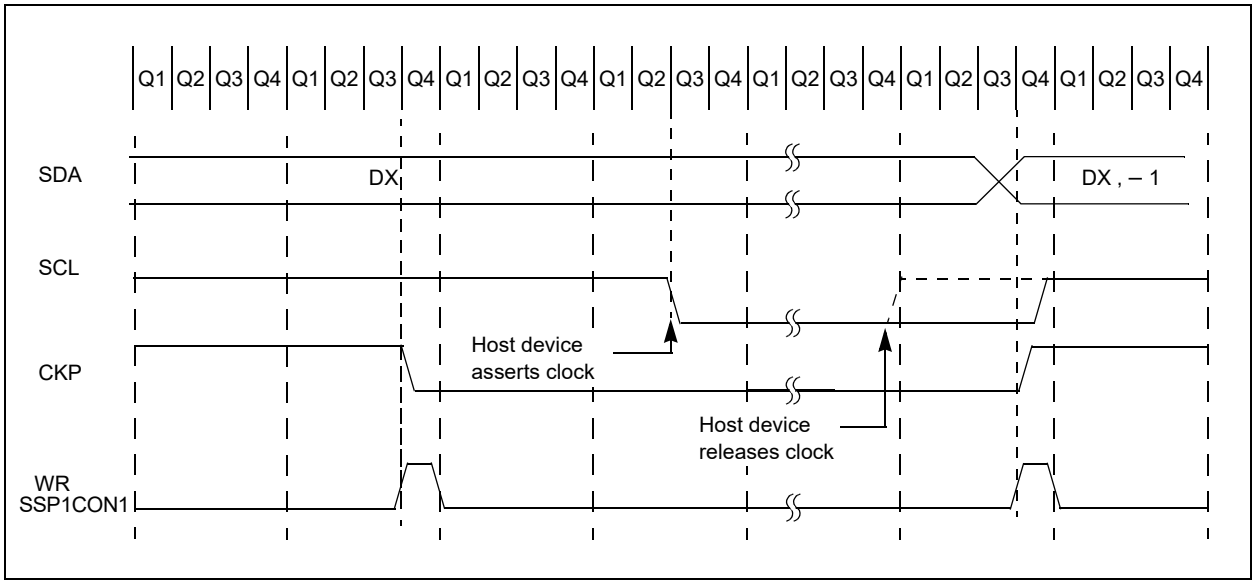

32.5.8 GENERAL CALL ADDRESS SUPPORT

The addressing procedure for the I²C bus is such that the first byte after the Start condition usually determines which device will be the client addressed by the host device. The exception is the general call address which can address all devices. When this address is used, all devices might, in theory, respond with an acknowledge.

The general call address is a reserved address in the I²C protocol, defined as address `0x00`. When the GCEN bit of the SSP1CON2 register is set, the client module will automatically $\overline{\text{ACK}}$ the reception of this address regardless of the value stored in SSP1ADD. After the client clocks in an address of all zeros with the R/$\overline{\text{W}}$ bit clear, an interrupt is generated and client software can read SSP1BUF and respond. Figure 32-24 shows a general call reception sequence.

In 10-bit Address mode, the UA bit will not be set on the reception of the general call address. The client will prepare to receive the second byte as data, just as it would in 7-bit mode.

If the AHEN bit of the SSP1CON3 register is set, just as with any other address reception, the client hardware will stretch the clock after the eighth falling edge of SCL. The client must then set its ACKDT value and release the clock with communication progressing.

FIGURE 32-24: CLIENT MODE GENERAL CALL ADDRESS SEQUENCE

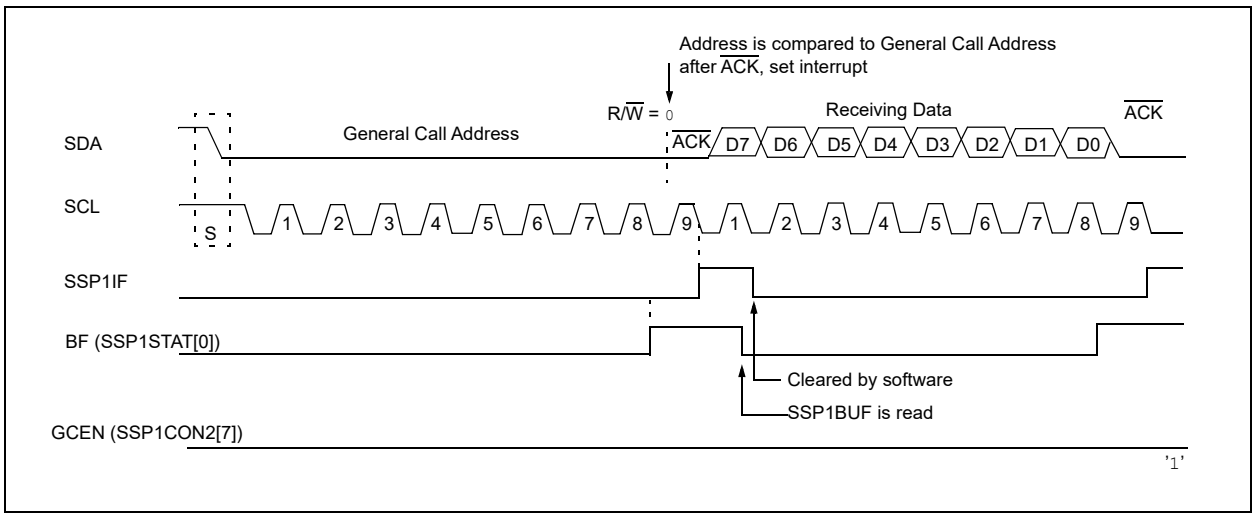

32.5.9 SSP MASK REGISTER

An SSP Mask (SSP1MSK) register (Register 32-5) is available in I²C Client mode as a mask for the value held in the SSP1SR register during an address comparison operation. A zero ('`0`') bit in the SSP1MSK register has the effect of making the corresponding bit of the received address a "don't care".

This register is reset to all '`1`'s upon any Reset condition and, therefore, has no effect on standard SSP operation until written with a mask value.

The SSP Mask register is active during:

- 7-bit Address mode: address compare of A[7:1].
- 10-bit Address mode: address compare of A[7:0] only. The SSP mask has no effect during the reception of the first (high) byte of the address.

32.6 I²C Host Mode

Host mode is enabled by setting and clearing the appropriate SSPM bits in the SSP1CON1 register and by setting the SSPEN bit. In Host mode, the SDA and SCK pins must be configured as inputs. The MSSP peripheral hardware will override the output driver TRIS controls when necessary to drive the pins low.

Host mode of operation is supported by interrupt generation on the detection of the Start and Stop conditions. The Stop (P) and Start (S) bits are cleared from a Reset or when the MSSP module is disabled. Control of the I²C bus may be taken when the P bit is set, or the bus is Idle.

In Firmware Controlled Host mode, user code conducts all I²C bus operations based on Start and Stop bit condition detection. Start and Stop condition detection is the only active circuitry in this mode. All other communication is done by the user software directly manipulating the SDA and SCL lines.

The following events will cause the SSP Interrupt Flag bit, SSP1IF, to be set (SSP interrupt, if enabled):

- Start condition generated
- Stop condition generated
- Data transfer byte transmitted/received
- Acknowledge transmitted/received
- Repeated Start generated

Note 1: The MSSP module, when configured in I²C Host mode, does not allow queuing of events. For instance, the user is not allowed to initiate a Start condition and immediately write the SSP1BUF register to initiate transmission before the Start condition is complete. In this case, the SSP1BUF will not be written to and the WCOL bit will be set, indicating that a write to the SSP1BUF did not occur

2: When in Host mode, Start/Stop detection is masked and an interrupt is generated when the SEN/PEN bit is cleared and the generation is complete.

32.6.1 I²C HOST MODE OPERATION

The host device generates all of the serial clock pulses and the Start and Stop conditions. A transfer is ended with a Stop condition or with a Repeated Start condition. Since the Repeated Start condition is also the beginning of the next serial transfer, the I²C bus will not be released.

In Host Transmitter mode, serial data is output through SDA, while SCL outputs the serial clock. The first byte transmitted contains the client address of the receiving device (7 bits) and the Read/Write (R/$\overline{W}$) bit. In this case, the R/$\overline{W}$ bit will be logic '0'. Serial data is transmitted eight bits at a time. After each byte is transmitted, an Acknowledge bit is received. Start and Stop conditions are output to indicate the beginning and the end of a serial transfer.

In Host Receive mode, the first byte transmitted contains the client address of the transmitting device (7 bits) and the R/$\overline{W}$ bit. In this case, the R/$\overline{W}$ bit will be logic '1'. Thus, the first byte transmitted is a 7-bit client address followed by a '1' to indicate the receive bit. Serial data is received via SDA, while SCL outputs the serial clock. Serial data is received eight bits at a time. After each byte is received, an Acknowledge bit is transmitted. Start and Stop conditions indicate the beginning and end of transmission.

A Baud Rate Generator is used to set the clock frequency output on SCL. See **Section 32.7 "Baud Rate Generator"** for more details.

32.6.2 CLOCK ARBITRATION

Clock arbitration occurs when the host, during any receive, transmit or Repeated Start/Stop condition, releases the SCL pin (SCL allowed to float high). When the SCL pin is allowed to float high, the Baud Rate Generator (BRG) is suspended from counting until the SCL pin is actually sampled high. When the SCL pin is sampled high, the Baud Rate Generator is reloaded with the contents of SSP1ADD[7:0] and begins counting. This ensures that the SCL high time will always be at least one BRG rollover count in the event that the clock is held low by an external device (Figure 32-25).

FIGURE 32-25: BAUD RATE GENERATOR TIMING WITH CLOCK ARBITRATION

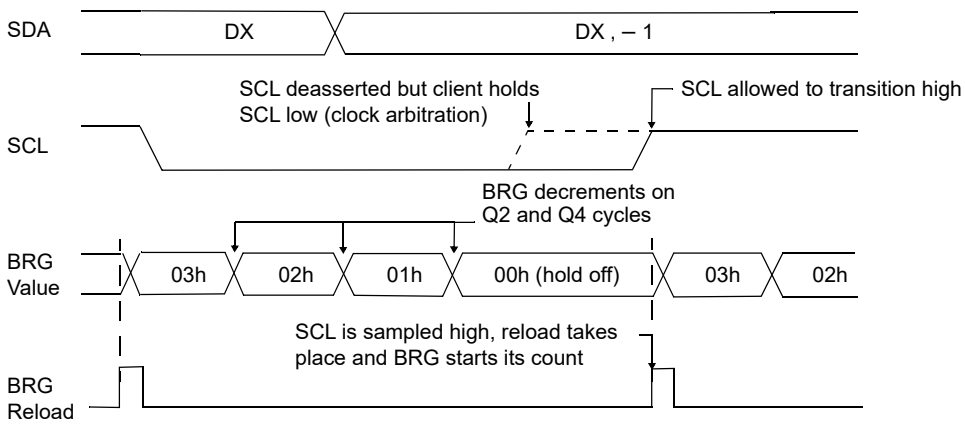

32.6.3 WCOL STATUS FLAG

If the user writes the SSP1BUF when a Start, Restart, Stop, Receive or Transmit sequence is in progress, the WCOL is set and the contents of the buffer are unchanged (the write does not occur). Any time the WCOL bit is set it indicates that an action on SSP1BUF was attempted while the module was not Idle.

Note:	Because queuing of events is not allowed, writing to the lower five bits of SSP1CON2 is disabled until the Start condition is complete.

32.6.4 I²C HOST MODE START CONDITION TIMING

To initiate a Start condition (Figure 32-26), the user sets the Start Enable bit, SEN bit of the SSP1CON2 register. If the SDA and SCL pins are sampled high, the Baud Rate Generator is reloaded with the contents of SSP1ADD[7:0] and starts its count. If SCL and SDA are both sampled high when the Baud Rate Generator times out (TBRG), the SDA pin is driven low. The action of the SDA being driven low while SCL is high is the Start condition and causes the S bit of the SSP1STAT1 register to be set. Following this, the Baud Rate Generator is reloaded with the contents of SSP1ADD[7:0] and resumes its count. When the Baud Rate Generator times out (TBRG), the SEN bit of the SSP1CON2 register will be automatically cleared by hardware; the Baud Rate Generator is suspended, leaving the SDA line held low and the Start condition is complete.

Note 1: If at the beginning of the Start condition, the SDA and SCL pins are already sampled low, or if during the Start condition, the SCL line is sampled low before the SDA line is driven low, a bus collision occurs, the Bus Collision Interrupt Flag, BCLIF, is set, the Start condition is aborted and the I²C module is reset into its Idle state.

2: The Philips I²C specification states that a bus collision cannot occur on a Start.

FIGURE 32-26: FIRST START BIT TIMING

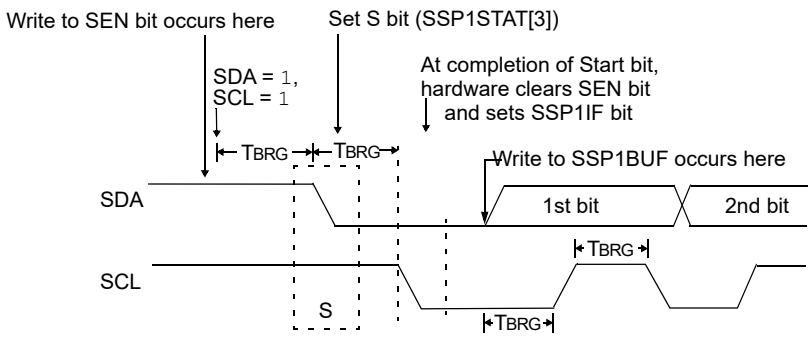

32.6.5 I²C HOST MODE REPEATED START CONDITION TIMING

A Repeated Start condition (Figure 32-27) occurs when the RSEN bit of the SSP1CON2 register is programmed high and the host state machine is no longer active. When the RSEN bit is set, the SCL pin is asserted low. When the SCL pin is sampled low, the Baud Rate Generator is loaded and begins counting. The SDA pin is released (brought high) for one Baud Rate Generator count (TBRG). When the Baud Rate Generator times out, if SDA is sampled high, the SCL pin will be deasserted (brought high). When SCL is sampled high, the Baud Rate Generator is reloaded and begins counting. SDA and SCL must be sampled high for one TBRG. This action is then followed by assertion of the SDA pin (SDA = 0) for one TBRG while SCL is high. SCL is asserted low. Following this, the RSEN bit of the SSP1CON2 register will be automatically cleared and the Baud Rate Generator will not be reloaded, leaving the SDA pin held low. As soon as a Start condition is detected on the SDA and SCL pins, the S bit of the SSP1STAT register will be set. The SSP1IF bit will not be set until the Baud Rate Generator has timed out.

Note 1: If RSEN is programmed while any other event is in progress, it will not take effect.

2: A bus collision during the Repeated Start condition occurs if:

- SDA is sampled low when SCL goes from low-to-high.
- SCL goes low before SDA is asserted low. This may indicate that another host is attempting to transmit a data '1'.

FIGURE 32-27: REPEATED START CONDITION WAVEFORM

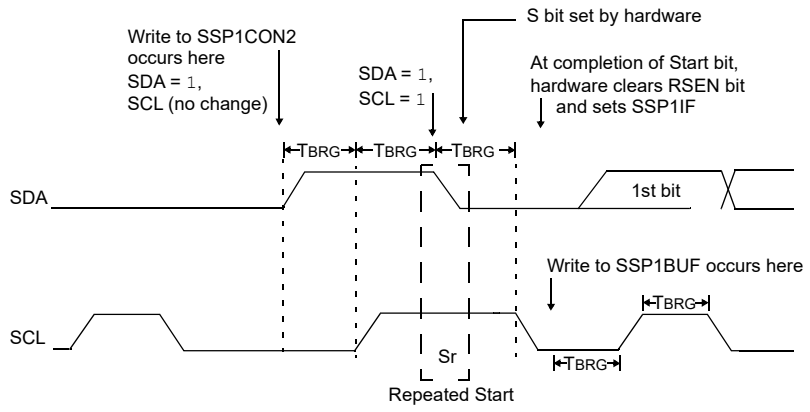

32.6.6 I²C HOST MODE TRANSMISSION

Transmission of a data byte, a 7-bit address or the other half of a 10-bit address is accomplished by simply writing a value to the SSP1BUF register. This action will set the Buffer Full flag bit, BF, and allow the Baud Rate Generator to begin counting and start the next transmission. Each bit of address/data will be shifted out onto the SDA pin after the falling edge of SCL is asserted. SCL is held low for one Baud Rate Generator rollover count (TBRG). Data must be valid before SCL is released high. When the SCL pin is released high, it is held that way for TBRG. The data on the SDA pin must remain stable for that duration and some hold time after the next falling edge of SCL. After the eighth bit is shifted out (the falling edge of the eighth clock), the BF flag is cleared and the host releases SDA. This allows the client device being addressed to respond with an $\overline{ACK}$ bit during the ninth bit time if an address match occurred, or if data was received properly. The status of $\overline{ACK}$ is written into the ACKSTAT bit on the rising edge of the ninth clock. If the host receives an Acknowledge, the Acknowledge Status bit, ACKSTAT, is cleared. If not, the bit is set. After the ninth clock, the SSP1IF bit is set and the host clock (Baud Rate Generator) is suspended until the next data byte is loaded into the SSP1BUF, leaving SCL low and SDA unchanged (Figure 32-28).

After the write to the SSP1BUF, each bit of the address will be shifted out on the falling edge of SCL until all seven address bits and the R/$\overline{W}$ bit are completed. On the falling edge of the eighth clock, the host will release the SDA pin, allowing the client to respond with an Acknowledge. On the falling edge of the ninth clock, the host will sample the SDA pin to see if the address was recognized by a client. The status of the $\overline{ACK}$ bit is loaded into the ACKSTAT Status bit of the SSP1CON2 register. Following the falling edge of the ninth clock transmission of the address, the SSP1IF is set, the BF flag is cleared and the Baud Rate Generator is turned off until another write to the SSP1BUF takes place, holding SCL low and allowing SDA to float.

32.6.6.1 BF Status Flag

In Transmit mode, the BF bit of the SSP1STAT register is set when the CPU writes to SSP1BUF and is cleared when all eight bits are shifted out.

32.6.6.2 WCOL Status Flag

If the user writes the SSP1BUF when a transmit is already in progress (i.e., SSP1SR is still shifting out a data byte), the WCOL bit is set and the contents of the buffer are unchanged (the write does not occur).

WCOL must be cleared by software before the next transmission.

32.6.6.3 ACKSTAT Status Flag

In Transmit mode, the ACKSTAT bit of the SSP1CON2 register is cleared when the client has sent an Acknowledge ($\overline{ACK}$ = 0) and is set when the client does not Acknowledge ($\overline{ACK}$ = 1). A client sends an Acknowledge when it has recognized its address (including a general call), or when the client has properly received its data.

32.6.6.4 Typical transmit sequence:

1. The user generates a Start condition by setting the SEN bit of the SSP1CON2 register.
2. SSP1IF is set by hardware on completion of the Start.
3. SSP1IF is cleared by software.
4. The MSSP module will wait the required start time before any other operation takes place.
5. The user loads the SSP1BUF with the client address to transmit.
6. Address is shifted out the SDA pin until all eight bits are transmitted. Transmission begins as soon as SSP1BUF is written to.
7. The MSSP module shifts in the $\overline{ACK}$ bit from the client device and writes its value into the ACKSTAT bit of the SSP1CON2 register.
8. The MSSP module generates an interrupt at the end of the ninth clock cycle by setting the SSP1IF bit.
9. The user loads the SSP1BUF with eight bits of data.
10. Data is shifted out the SDA pin until all eight bits are transmitted.
11. The MSSP module shifts in the $\overline{ACK}$ bit from the client device and writes its value into the ACKSTAT bit of the SSP1CON2 register.
12. Steps 8-11 are repeated for all transmitted data bytes.
13. The user generates a Stop or Restart condition by setting the PEN or RSEN bits of the SSP1CON2 register. Interrupt is generated once the Stop/Restart condition is complete.

© 2017-2021 Microchip Technology Inc.

FIGURE 32-28: I²C HOST MODE WAVEFORM (TRANSMISSION, 7 OR 10-BIT ADDRESS)

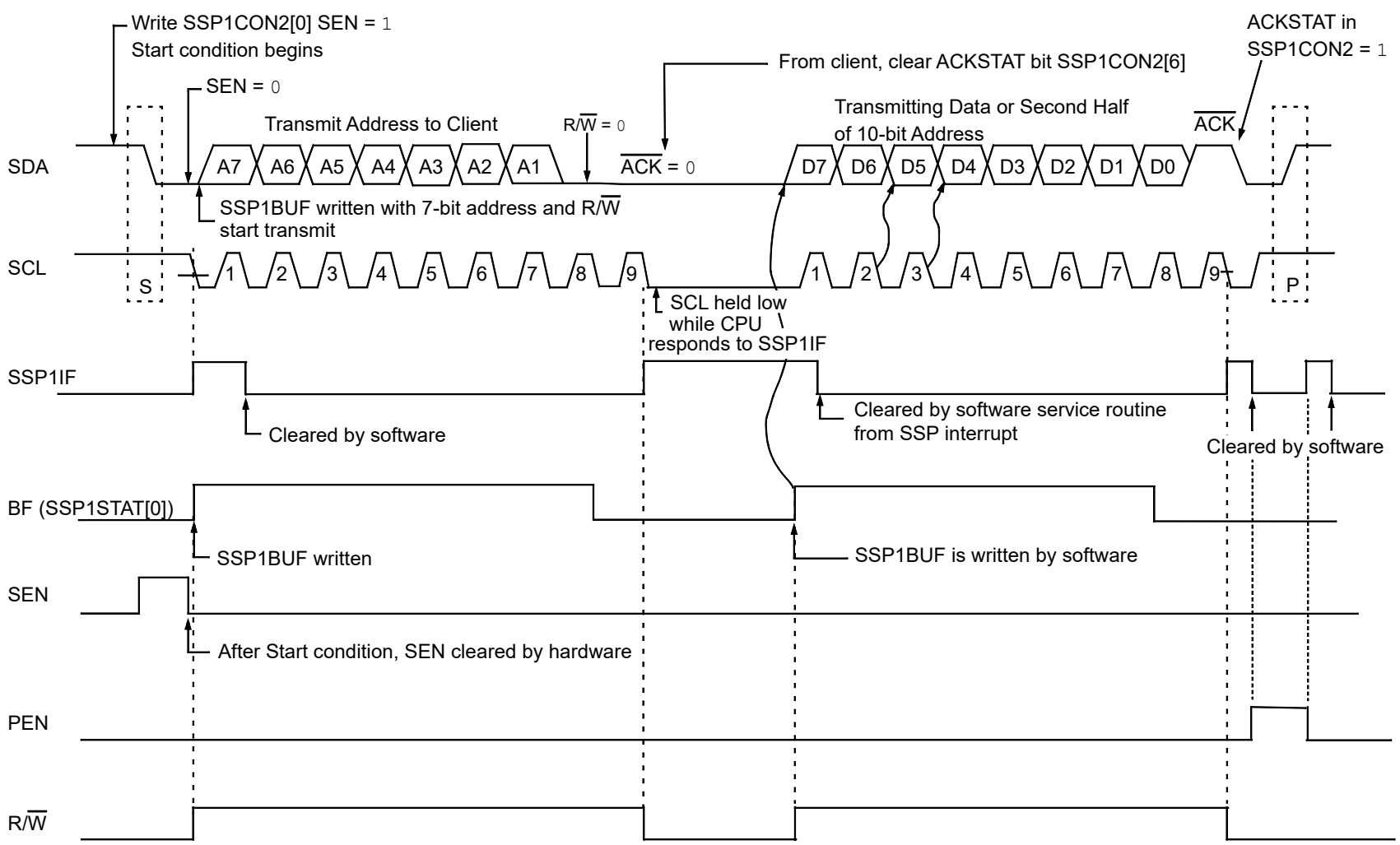

© 2017-2021 Microchip Technology Inc.

32.6.7 I²C HOST MODE RECEPTION

Host mode reception (Figure 32-29) is enabled by programming the Receive Enable bit, RCEN bit of the SSP1CON2 register.

Note: The MSSP module must be in an Idle state before the RCEN bit is set or the RCEN bit will be disregarded.

The Baud Rate Generator begins counting and on each rollover, the state of the SCL pin changes (high-to-low/low-to-high) and data is shifted into the SSP1SR. After the falling edge of the eighth clock, the receive enable flag is automatically cleared, the contents of the SSP1SR are loaded into the SSP1BUF, the BF flag bit is set, the SSP1IF flag bit is set and the Baud Rate Generator is suspended from counting, holding SCL low. The MSSP is now in Idle state awaiting the next command. When the buffer is read by the CPU, the BF flag bit is automatically cleared. The user can then send an Acknowledge bit at the end of reception by setting the Acknowledge Sequence Enable, ACKEN bit of the SSP1CON2 register.

32.6.7.1 BF Status Flag

In receive operation, the BF bit is set when an address or data byte is loaded into SSP1BUF from SSP1SR. It is cleared when the SSP1BUF register is read.

32.6.7.2 SSPOV Status Flag

In receive operation, the SSPOV bit is set when eight bits are received into the SSP1SR and the BF flag bit is already set from a previous reception.

32.6.7.3 WCOL Status Flag

If the user writes the SSP1BUF when a receive is already in progress (i.e., SSP1SR is still shifting in a data byte), the WCOL bit is set and the contents of the buffer are unchanged (the write does not occur).

32.6.7.4 Typical Receive Sequence:

1. The user generates a Start condition by setting the SEN bit of the SSP1CON2 register.
2. SSP1IF is set by hardware on completion of the Start.
3. SSP1IF is cleared by software.
4. User writes SSP1BUF with the client address to transmit and the R/$\overline{W}$ bit set.
5. Address is shifted out the SDA pin until all eight bits are transmitted. Transmission begins as soon as SSP1BUF is written to.
6. The MSSP module shifts in the $\overline{ACK}$ bit from the client device and writes its value into the ACKSTAT bit of the SSP1CON2 register.
7. The MSSP module generates an interrupt at the end of the ninth clock cycle by setting the SSP1IF bit.
8. User sets the RCEN bit of the SSP1CON2 register and the host clocks in a byte from the client.
9. After the eighth falling edge of SCL, SSP1IF and BF are set.
10. Host clears SSP1IF and reads the received byte from SSP1BUF, clears BF.
11. Host sets $\overline{ACK}$ value sent to client in ACKDT bit of the SSP1CON2 register and initiates the $\overline{ACK}$ by setting the ACKEN bit.
12. Host's $\overline{ACK}$ is clocked out to the client and SSP1IF is set.
13. User clears SSP1IF.
14. Steps 8-13 are repeated for each received byte from the client.
15. Host sends a not $\overline{ACK}$ or Stop to end communication.

FIGURE 32-29: I²C HOST MODE WAVEFORM (RECEPTION, 7-BIT ADDRESS)

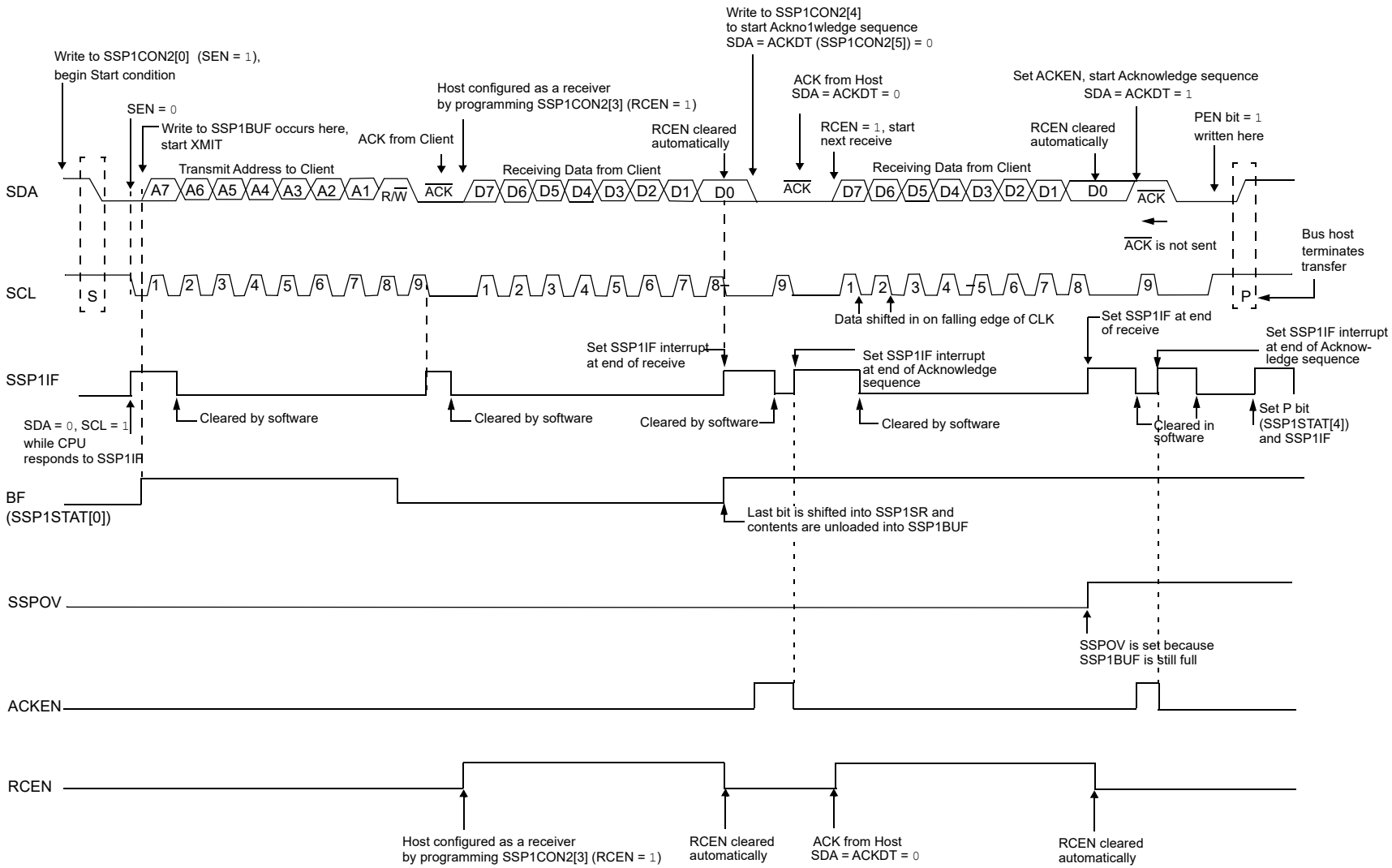

© 2017-2021 Microchip Technology Inc.

32.6.8 ACKNOWLEDGE SEQUENCE TIMING

An Acknowledge sequence is enabled by setting the Acknowledge Sequence Enable bit, ACKEN bit of the SSP1CON2 register. When this bit is set, the SCL pin is pulled low and the contents of the Acknowledge data bit are presented on the SDA pin. If the user wishes to generate an Acknowledge, then the ACKDT bit may be cleared. If not, the user may set the ACKDT bit before starting an Acknowledge sequence. The Baud Rate Generator then counts for one rollover period (TBRG) and the SCL pin is deasserted (pulled high). When the SCL pin is sampled high (clock arbitration), the Baud Rate Generator counts for TBRG. The SCL pin is then pulled low. Following this, the ACKEN bit is automatically cleared, the Baud Rate Generator is turned off and the MSSP module then goes into Idle mode (Figure 32-30).

32.6.8.1 WCOL Status Flag

If the user writes the SSP1BUF when an Acknowledge sequence is in progress, then WCOL bit is set and the contents of the buffer are unchanged (the write does not occur).

32.6.9 STOP CONDITION TIMING

A Stop bit is asserted on the SDA pin at the end of a receive/transmit by setting the Stop Sequence Enable bit, PEN bit of the SSP1CON2 register. At the end of a receive/transmit, the SCL line is held low after the falling edge of the ninth clock. When the PEN bit is set, the host will assert the SDA line low. When the SDA line is sampled low, the Baud Rate Generator is reloaded and counts down to '0'. When the Baud Rate Generator times out, the SCL pin will be brought high and one TBRG (Baud Rate Generator rollover count) later, the SDA pin will be deasserted. When the SDA pin is sampled high while SCL is high, the P bit of the SSP1STAT register is set. A TBRG later, the PEN bit is cleared and the SSP1IF bit is set (Figure 32-31).

32.6.9.1 WCOL Status Flag

If the user writes the SSP1BUF when a Stop sequence is in progress, then the WCOL bit is set and the contents of the buffer are unchanged (the write does not occur).

FIGURE 32-30: ACKNOWLEDGE SEQUENCE WAVEFORM

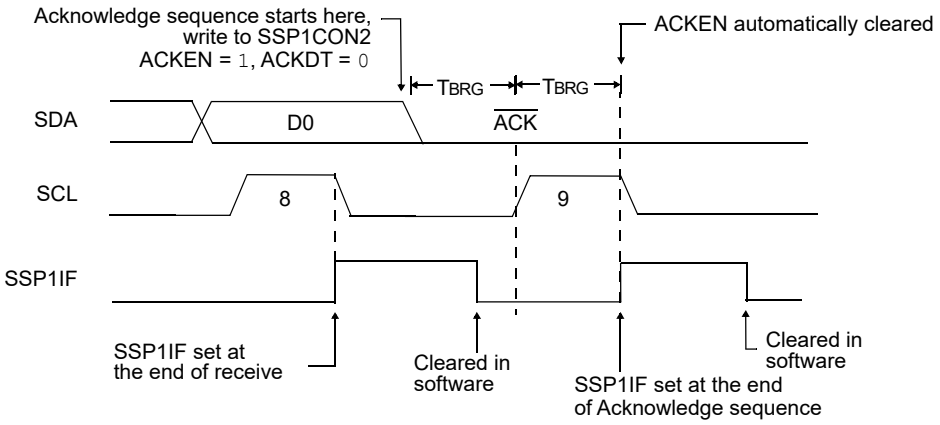

Note: TBRG = one Baud Rate Generator period.

FIGURE 32-31: STOP CONDITION RECEIVE OR TRANSMIT MODE

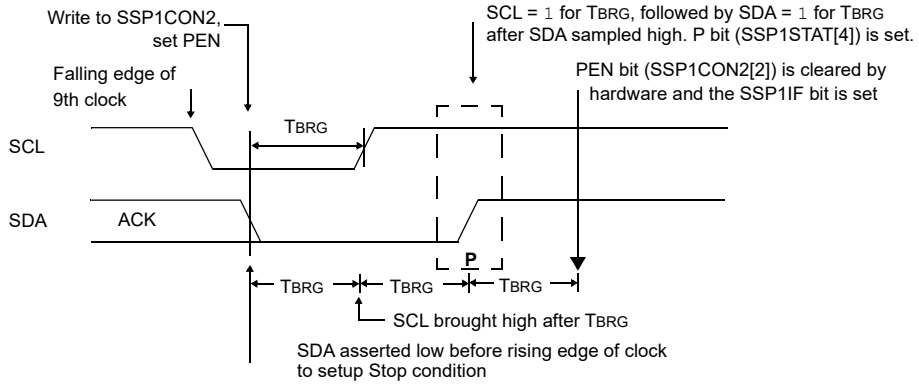

Note: TBRG = one Baud Rate Generator period.

32.6.10 SLEEP OPERATION

While in Sleep mode, the I^{2}C client module can receive addresses or data and when an address match or complete byte transfer occurs, wake the processor from Sleep (if the MSSP interrupt is enabled).

32.6.11 EFFECTS OF A RESET

A Reset disables the MSSP module and terminates the current transfer.

32.6.12 MULTI-HOST MODE

In Multi-Host mode, the interrupt generation on the detection of the Start and Stop conditions allows the determination of when the bus is free. The Stop (P) and Start (S) bits are cleared from a Reset or when the MSSP module is disabled. Control of the I^{2}C bus may be taken when the P bit of the SSP1STAT register is set, or the bus is Idle, with both the S and P bits clear. When the bus is busy, enabling the SSP interrupt will generate the interrupt when the Stop condition occurs.

In multi-host operation, the SDA line must be monitored for arbitration to see if the signal level is the expected output level. This check is performed by hardware with the result placed in the BCL1IF bit.

The states where arbitration can be lost are:

- Address Transfer
- Data Transfer
- A Start Condition
- A Repeated Start Condition
- An Acknowledge Condition

32.6.13 MULTI -HOST COMMUNICATION, BUS COLLISION AND BUS ARBITRATION

Multi-Host mode support is achieved by bus arbitration. When the host outputs address/data bits onto the SDA pin, arbitration takes place when the host outputs a '1' on SDA, by letting SDA float high and another host asserts a '0'. When the SCL pin floats high, data may be stable. If the expected data on SDA is a '1' and the data sampled on the SDA pin is '0', then a bus collision has taken place. The host will set the Bus Collision Interrupt Flag, BCL1IF and reset the I^{2}C port to its Idle state (Figure 32-32).

If a transmit was in progress when the bus collision occurred, the transmission is halted, the BF flag is cleared, the SDA and SCL lines are deasserted and the SSP1BUF can be written to. When the user services the bus collision Interrupt Service Routine and if the I^{2}C bus is free, the user can resume communication by asserting a Start condition.

If a Start, Repeated Start, Stop or Acknowledge condition was in progress when the bus collision occurred, the condition is aborted, the SDA and SCL lines are deasserted and the respective control bits in the SSP1CON2 register are cleared. When the user services the bus collision Interrupt Service Routine and if the I^{2}C bus is free, the user can resume communication by asserting a Start condition.

The host will continue to monitor the SDA and SCL pins. If a Stop condition occurs, the SSP1IF bit will be set.

A write to the SSP1BUF will start the transmission of data at the first data bit, regardless of where the transmitter left off when the bus collision occurred.

In Multi-Host mode, the interrupt generation on the detection of Start and Stop conditions allows the determination of when the bus is free. Control of the I^{2}C bus can be taken when the P bit is set in the SSP1STAT register, or the bus is Idle and the S and P bits are cleared.

FIGURE 32-32: BUS COLLISION TIMING FOR TRANSMIT AND ACKNOWLEDGE

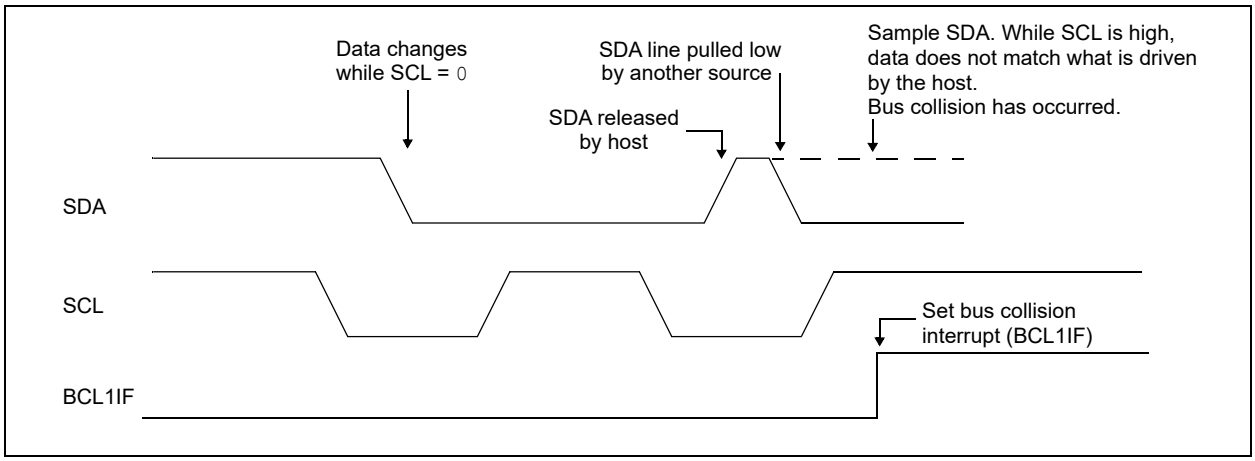

32.6.13.1 Bus Collision During a Start Condition

During a Start condition, a bus collision occurs if:

a) SDA or SCL are sampled low at the beginning of the Start condition (Figure 32-33).

b) SCL is sampled low before SDA is asserted low (Figure 32-34).

During a Start condition, both the SDA and the SCL pins are monitored.

If the SDA pin is already low, or the SCL pin is already low, then all of the following occur:

- the Start condition is aborted,
- the BCL1IF flag is set and
- the MSSP module is reset to its Idle state (Figure 32-33).

The Start condition begins with the SDA and SCL pins deasserted. When the SDA pin is sampled high, the Baud Rate Generator is loaded and counts down. If the SCL pin is sampled low while SDA is high, a bus collision occurs because it is assumed that another host is attempting to drive a data '1' during the Start condition.

If the SDA pin is sampled low during this count, the BRG is reset and the SDA line is asserted early (Figure 32-35). If, however, a '1' is sampled on the SDA pin, the SDA pin is asserted low at the end of the BRG count. The Baud Rate Generator is then reloaded and counts down to zero; if the SCL pin is sampled as '0' during this time, a bus collision does not occur. At the end of the BRG count, the SCL pin is asserted low.

> **Note:** The reason that bus collision is not a factor during a Start condition is that no two bus hosts can assert a Start condition at the exact same time. Therefore, one host will always assert SDA before the other. This condition does not cause a bus collision because the two hosts must be allowed to arbitrate the first address following the Start condition. If the address is the same, arbitration must be allowed to continue into the data portion, Repeated Start or Stop conditions.

FIGURE 32-33: BUS COLLISION DURING START CONDITION (SDA ONLY)

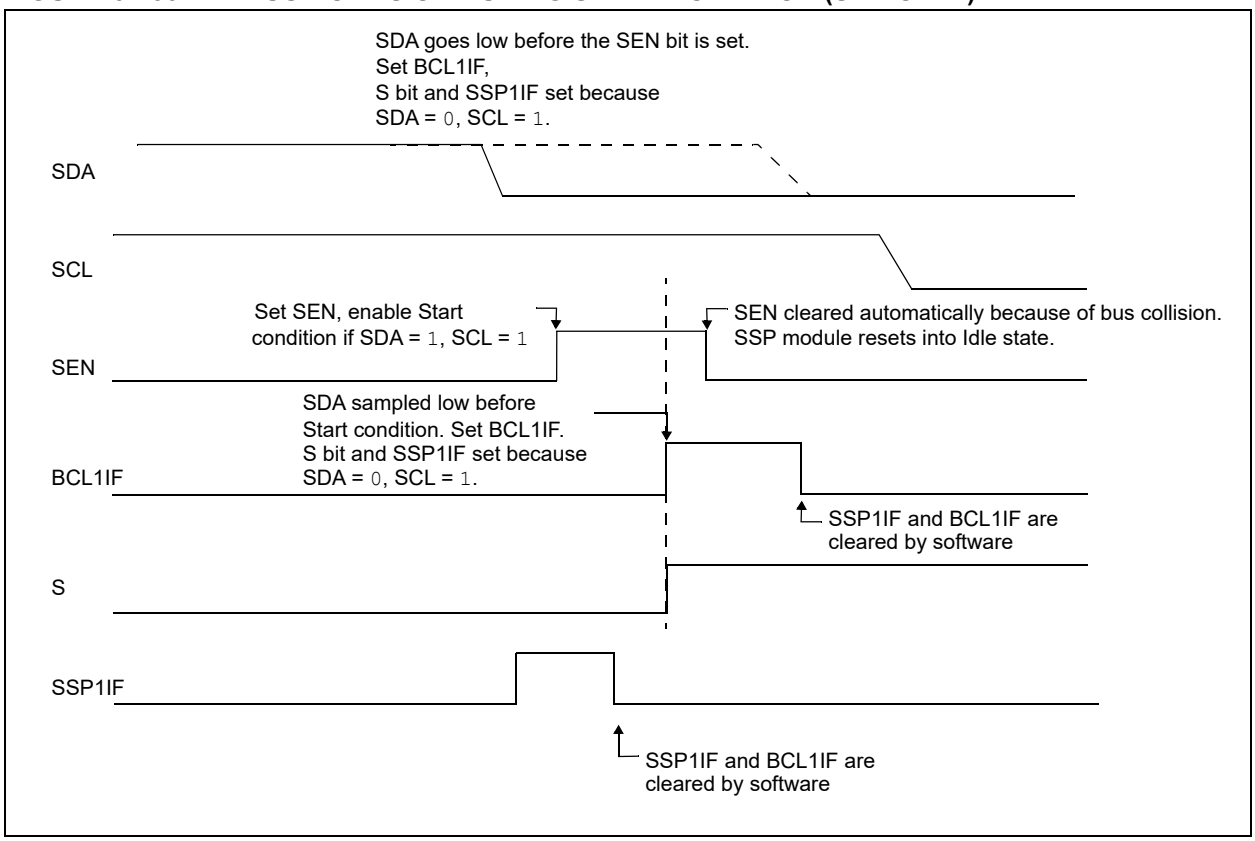

FIGURE 32-34: BUS COLLISION DURING START CONDITION (SCL = 0)

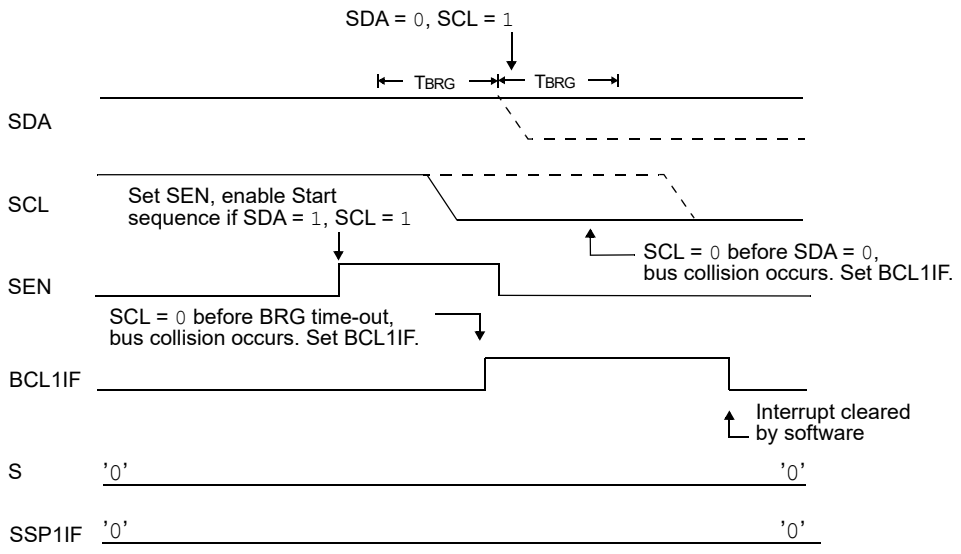

FIGURE 32-35: BRG RESET DUE TO SDA ARBITRATION DURING START CONDITION

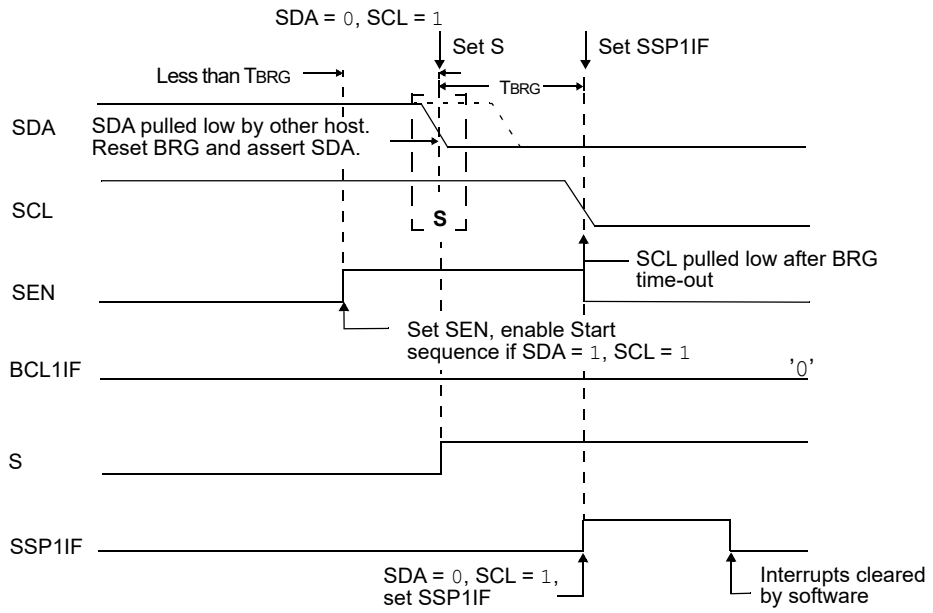

32.6.13.2 Bus Collision During a Repeated Start Condition

During a Repeated Start condition, a bus collision occurs if:

a) A low level is sampled on SDA when SCL goes from low level to high level (Case 1).

b) SCL goes low before SDA is asserted low, indicating that another host is attempting to transmit a data '1' (Case 2).

When the user releases SDA and the pin is allowed to float high, the BRG is loaded with SSP1ADD and counts down to zero. The SCL pin is then deasserted and when sampled high, the SDA pin is sampled.

If SDA is low, a bus collision has occurred (i.e., another host is attempting to transmit a data '0', Figure 32-36). If SDA is sampled high, the BRG is reloaded and begins counting. If SDA goes from high-to-low before the BRG times out, no bus collision occurs because no two hosts can assert SDA at exactly the same time.

If SCL goes from high-to-low before the BRG times out and SDA has not already been asserted, a bus collision occurs. In this case, another host is attempting to transmit a data '1' during the Repeated Start condition, see Figure 32-37.

If, at the end of the BRG time-out, both SCL and SDA are still high, the SDA pin is driven low and the BRG is reloaded and begins counting. At the end of the count, regardless of the status of the SCL pin, the SCL pin is driven low and the Repeated Start condition is complete.

FIGURE 32-36: BUS COLLISION DURING A REPEATED START CONDITION (CASE 1)

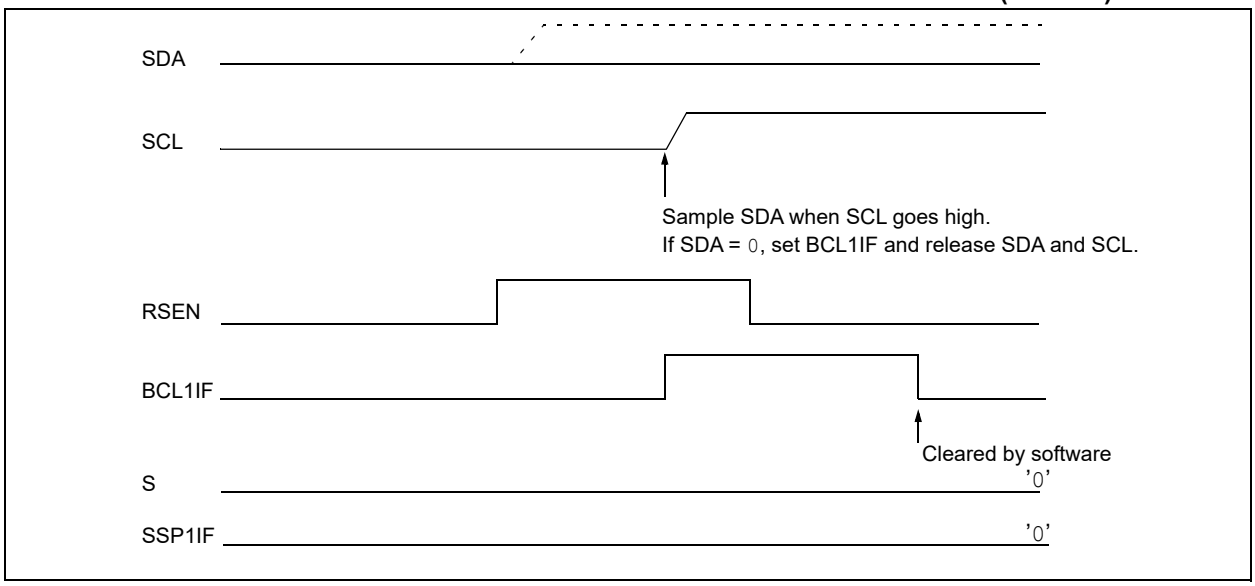

FIGURE 32-37: BUS COLLISION DURING REPEATED START CONDITION (CASE 2)

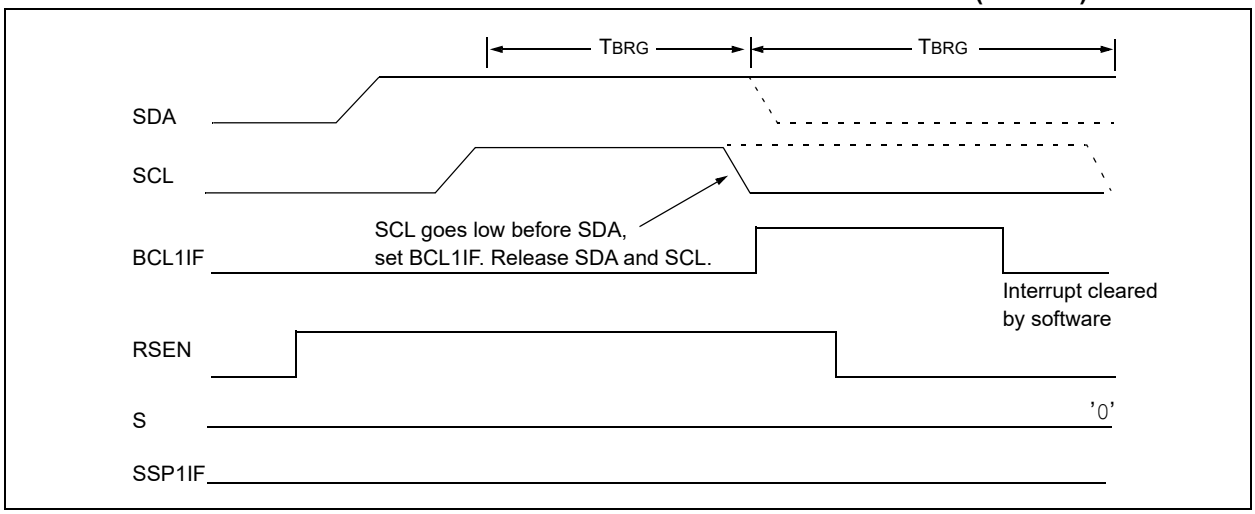

32.6.13.3 Bus Collision During a Stop Condition

Bus collision occurs during a Stop condition if:

a) After the SDA pin has been deasserted and allowed to float high, SDA is sampled low after the BRG has timed out (Case 1).

b) After the SCL pin is deasserted, SCL is sampled low before SDA goes high (Case 2).

The Stop condition begins with SDA asserted low. When SDA is sampled low, the SCL pin is allowed to float. When the pin is sampled high (clock arbitration), the Baud Rate Generator is loaded with SSP1ADD and counts down to zero. After the BRG times out, SDA is sampled. If SDA is sampled low, a bus collision has occurred. This is due to another host attempting to drive a data '0' (Figure 32-38). If the SCL pin is sampled low before SDA is allowed to float high, a bus collision occurs. This is another case of another host attempting to drive a data '0' (Figure 32-39).

FIGURE 32-38: BUS COLLISION DURING A STOP CONDITION (CASE 1)

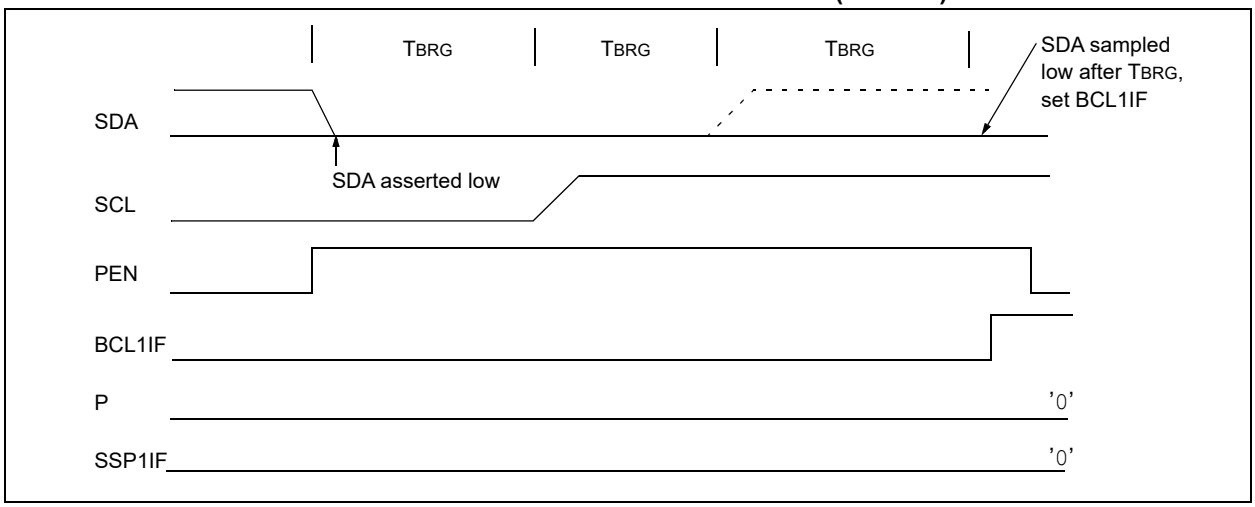

FIGURE 32-39: BUS COLLISION DURING A STOP CONDITION (CASE 2)

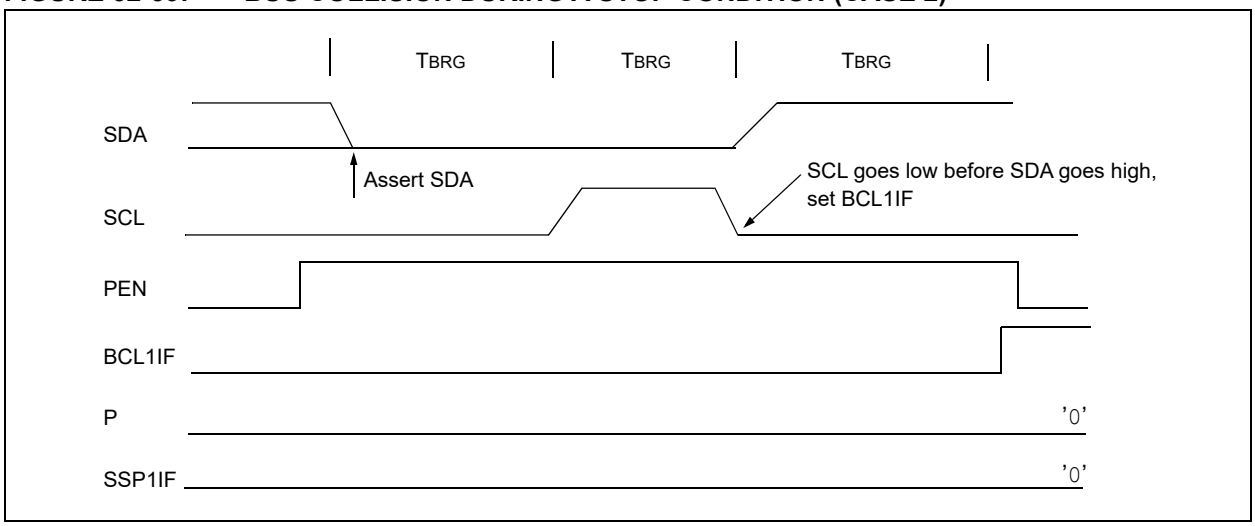

32.7 BAUD RATE GENERATOR

The MSSP module has a Baud Rate Generator available for clock generation in both I^2C and SPI Host modes. The Baud Rate Generator (BRG) reload value is placed in the SSP1ADD register (Register 32-6). When a write occurs to SSP1BUF, the Baud Rate Generator will automatically begin counting down.

Once the given operation is complete, the internal clock will automatically stop counting and the clock pin will remain in its last state.

An internal signal "Reload" in Figure 32-40 triggers the value from SSP1ADD to be loaded into the BRG counter. This occurs twice for each oscillation of the module clock line. The logic dictating when the reload signal is asserted depends on the mode the MSSP is being operated in.

Table 32-4 demonstrates clock rates based on instruction cycles and the BRG value loaded into SSP1ADD.

EQUATION 32-1:

$$F_{CLOCK} = \frac{F_{OSC}}{(SSP1ADD + 1)(4)}$$

FIGURE 32-40: BAUD RATE GENERATOR BLOCK DIAGRAM

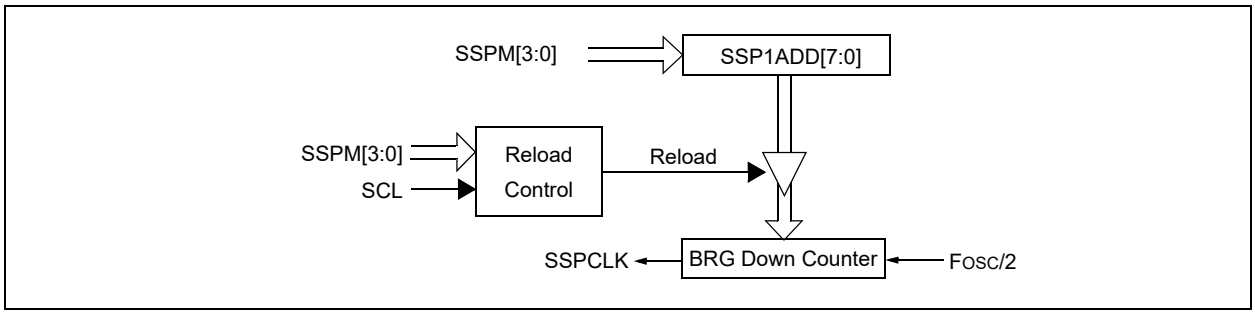

Note: Values of `0x00`, `0x01` and `0x02` are not valid for SSP1ADD when used as a Baud Rate Generator for I^2C. This is an implementation limitation.

TABLE 32-2: MSSP CLOCK RATE W/BRG

FOSC	FCY	BRG Value	FCLOCK (2 Rollovers of BRG)
32 MHz	8 MHz	13h	400 kHz
32 MHz	8 MHz	19h	308 kHz
32 MHz	8 MHz	4Fh	100 kHz
16 MHz	4 MHz	09h	400 kHz
16 MHz	4 MHz	0Ch	308 kHz
16 MHz	4 MHz	27h	100 kHz
4 MHz	1 MHz	09h	100 kHz

Note: Refer to the I/O port electrical specifications in Table 37-4 to ensure the system is designed to support IOL requirements.

32.8 Register Definitions: MSSP1 Control

REGISTER 32-1: SSP1STAT: SSP1 STATUS REGISTER

R/W-0/0	R/W-0/0	R/HS/HC-0	R/HS/HC-0	R/HS/HC-0	R/HS/HC-0	R/HS/HC-0	R/HS/HC-0
SMP	CKE(1)	D/$\overline{A}$	P(2)	S(2)	R/$\overline{W}$	UA	BF
bit 7							bit 0

Legend:		
R = Readable bit	W = Writable bit	U = Unimplemented bit, read as ‘0’
u = Bit is unchanged	x = Bit is unknown	-n/n = Value at POR and BOR/Value at all other Resets
‘1’ = Bit is set	‘0’ = Bit is cleared	HS/HC = Hardware set/clear

bit 7 **SMP:** SPI Data Input Sample bit
SPI Host mode:
1 = Input data sampled at end of data output time
0 = Input data sampled at middle of data output time
SPI Client mode:
SMP must be cleared when SPI is used in Client mode
In I^2C Host or Client mode:
1 = Slew rate control disabled for Standard Speed mode (100 kHz and 1 MHz)
0 = Slew rate control enabled for High-Speed mode (400 kHz)

bit 6 **CKE:** SPI Clock Edge Select bit (SPI mode only)(1)
In SPI Host or Client mode:
1 = Transmit occurs on transition from active to Idle clock state
0 = Transmit occurs on transition from Idle to active clock state
In I^2C mode only:
1 = Enable input logic so that thresholds are compliant with SMBus specification
0 = Disable SMBus specific inputs

bit 5 **D/$\overline{A}$:** Data/$\overline{Address}$ bit (I^2C mode only)
1 = Indicates that the last byte received or transmitted was data
0 = Indicates that the last byte received or transmitted was address

bit 4 **P:** Stop bit(2)
(I^2C mode only. This bit is cleared when the MSSP module is disabled, SSPEN is cleared.)
1 = Indicates that a Stop bit has been detected last (this bit is ‘0’ on Reset)
0 = Stop bit was not detected last

bit 3 **S:** Start bit (2)
(I^2C mode only. This bit is cleared when the MSSP module is disabled, SSPEN is cleared.)
1 = Indicates that a Start bit has been detected last (this bit is ‘0’ on Reset)
0 = Start bit was not detected last

bit 2 **R/$\overline{W}$:** Read/$\overline{Write}$ bit information (I^2C mode only)
This bit holds the R/$\overline{W}$ bit information following the last address match. This bit is only valid from the address match to the next Start bit, Stop bit, or not $\overline{ACK}$ bit.
In I^2C Client mode:
1 = Read
0 = Write
In I^2C Host mode:
1 = Transmit is in progress
0 = Transmit is not in progress
ORing this bit with SEN, RSEN, PEN, RCEN or ACKEN will indicate if the MSSP is in Idle mode.

bit 1 **UA:** Update Address bit (10-bit I^2C mode only)
1 = Indicates that the user needs to update the address in the SSP1ADD register
0 = Address does not need to be updated

bit 0 **BF:** Buffer Full Status bit
Receive (SPI and I^2C modes):
1 = Receive complete, SSPBUF is full
0 = Receive not complete, SSPBUF is empty
Transmit (I^2C mode only):
1 = Data transmit in progress (does not include the $\overline{ACK}$ and Stop bits), SSP1BUF is full
0 = Data transmit complete (does not include the $\overline{ACK}$ and Stop bits), SSP1BUF is empty

Note 1: Polarity of clock state is set by the CKP bit of the SSP1CON register.
2: This bit is cleared on Reset and when SSPEN is cleared.

REGISTER 32-2: SSP1CON1: SSP1 CONTROL REGISTER 1

R/C/HS-0/0	R/C/HS-0/0	R/W-0/0	R/W-0/0	R/W-0/0	R/W-0/0	R/W-0/0	R/W-0/0
WCOL	SSPOV(1)	SSPEN	CKP	SSPM[3:0]			
bit 7							bit 0

Legend:			
R = Readable bit	W = Writable bit	U = Unimplemented bit, read as ‘0’	
u = Bit is unchanged	x = Bit is unknown	-n/n = Value at POR and BOR/Value at all other Resets	
‘1’ = Bit is set	‘0’ = Bit is cleared	HS = Bit is set by hardware	C = User cleared

bit 7 **WCOL:** Write Collision Detect bit (Transmit mode only)
1 = The SSP1BUF register is written while it is still transmitting the previous word (must be cleared in software)
0 = No collision

bit 6 **SSPOV:** Receive Overflow Indicator bit(1)
In SPI mode:
1 = A new byte is received while the SSP1BUF register is still holding the previous data. In case of overflow, the data in SSP1SR is lost. Overflow can only occur in Client mode. In Client mode, the user must read the SSP1BUF, even if only transmitting data, to avoid setting overflow. In Host mode, the overflow bit is not set since each new reception (and transmission) is initiated by writing to the SSP1BUF register (must be cleared in software).
0 = No overflow
In I^2C mode:
1 = A byte is received while the SSP1BUF register is still holding the previous byte. SSPOV is a “don’t care” in Transmit mode (must be cleared in software).
0 = No overflow

bit 5 **SSPEN:** Synchronous Serial Port Enable bit
In both modes, when enabled, the following pins must be properly configured as input or output
In SPI mode:
1 = Enables serial port and configures SCK, SDO, SDI and $\overline{SS}$ as the source of the serial port pins(2)
0 = Disables serial port and configures these pins as I/O port pins
In I^2C mode:
1 = Enables the serial port and configures the SDA and SCL pins as the source of the serial port pins(3)
0 = Disables serial port and configures these pins as I/O port pins

bit 4 **CKP:** Clock Polarity Select bit
In SPI mode:
1 = Idle state for clock is a high level
0 = Idle state for clock is a low level
In I^2C Client mode:
SCL release control
1 = Enable clock
0 = Holds clock low (clock stretch). (Used to ensure data setup time.)
In I^2C Host mode:
Unused in this mode

bit 3-0 **SSPM[3:0]:** Synchronous Serial Port Mode Select bits
1111 = I^2C Client mode, 10-bit address with Start and Stop bit interrupts enabled
1110 = I^2C Client mode, 7-bit address with Start and Stop bit interrupts enabled
1101 = Reserved
1100 = Reserved
1011 = I^2C firmware controlled Host mode (client Idle)
1010 = SPI Host mode, clock = FOSC/(4 * (SSP1ADD+1))(5)
1001 = Reserved
1000 = I^2C Host mode, clock = FOSC / (4 * (SSP1ADD+1))(4)
0111 = I^2C Client mode, 10-bit address
0110 = I^2C Client mode, 7-bit address
0101 = SPI Client mode, clock = SCK pin, $\overline{SS}$ pin control disabled, $\overline{SS}$ can be used as I/O pin
0100 = SPI Client mode, clock = SCK pin, $\overline{SS}$ pin control enabled
0011 = SPI Host mode, clock = T2_match/2
0010 = SPI Host mode, clock = FOSC/64
0001 = SPI Host mode, clock = FOSC/16
0000 = SPI Host mode, clock = FOSC/4

Note 1: In Host mode, the overflow bit is not set since each new reception (and transmission) is initiated by writing to the SSP1BUF register.
2: When enabled, these pins must be properly configured as input or output. Use SSP1SSPPS, SSP1CLKPPS, SSP1DATPPS, and RxyPPS to select the pins.
3: When enabled, the SDA and SCL pins must be configured as inputs. Use SSP1CLKPPS, SSP1DATPPS, and RxyPPS to select the pins.
4: SSP1ADD values of 0, 1 or 2 are not supported for I^2C mode.
5: SSP1ADD value of ‘0’ is not supported. Use SSPM = 0000 instead.

REGISTER 32-3: SSP1CON2: SSP1 CONTROL REGISTER 2 (I^2C MODE ONLY)(1)

R/W-0/0	R/HS/HC-0	R/W-0/0	R/S/HC-0/0	R/S/HC-0/0	R/S/HC-0/0	R/S/HC-0/0	R/S/HC-0/0
GCEN	ACKSTAT	ACKDT	ACKEN	RCEN	PEN	RSEN	SEN
bit 7							bit 0

Legend:		
R = Readable bit	W = Writable bit	U = Unimplemented bit, read as ‘0’
u = Bit is unchanged	x = Bit is unknown	-n/n = Value at POR and BOR/Value at all other Resets
‘1’ = Bit is set	‘0’ = Bit is cleared	HC = Cleared by hardware S = User set

bit 7 **GCEN:** General Call Enable bit (in I^2C Client mode only)
1 = Enable interrupt when a general call address (0x00 or 00h) is received in the SSP1SR
0 = General call address disabled

bit 6 **ACKSTAT:** Acknowledge Status bit (in I^2C mode only)
1 = Acknowledge was not received
0 = Acknowledge was received

bit 5 **ACKDT:** Acknowledge Data bit (in I^2C mode only)
In Receive mode:
Value transmitted when the user initiates an Acknowledge sequence at the end of a receive
1 = Not Acknowledge
0 = Acknowledge

bit 4 **ACKEN:** Acknowledge Sequence Enable bit (in I^2C Host mode only)
In Host Receive mode:
1 = Initiate Acknowledge sequence on SDA and SCL pins, and transmit ACKDT data bit. Automatically cleared by hardware.
0 = Acknowledge sequence idle

bit 3 **RCEN:** Receive Enable bit (in I^2C Host mode only)
1 = Enables Receive mode for I^2C
0 = Receive idle

bit 2 **PEN:** Stop Condition Enable bit (in I^2C Host mode only)
SCKMSSP Release Control:
1 = Initiate Stop condition on SDA and SCL pins. Automatically cleared by hardware.
0 = Stop condition Idle

bit 1 **RSEN:** Repeated Start Condition Enable bit (in I^2C Host mode only)
1 = Initiate Repeated Start condition on SDA and SCL pins. Automatically cleared by hardware.
0 = Repeated Start condition Idle

bit 0 **SEN:** Start Condition Enable/Stretch Enable bit
In Host mode:
1 = Initiate Start condition on SDA and SCL pins. Automatically cleared by hardware.
0 = Start condition Idle
In Client mode:
1 = Clock stretching is enabled for both client transmit and client receive (stretch enabled)
0 = Clock stretching is disabled

Note 1: For bits ACKEN, RCEN, PEN, RSEN, SEN: If the I^2C module is not in the Idle mode, this bit may not be set (no spooling) and the SSP1BUF may not be written (or writes to the SSP1BUF are disabled).

REGISTER 32-4: SSP1CON3: SSP1 CONTROL REGISTER 3

R-0/0	R/W-0/0	R/W-0/0	R/W-0/0	R/W-0/0	R/W-0/0	R/W-0/0	R/W-0/0
ACKTIM(3)	PCIE	SCIE	BOEN	SDAHT	SBCDE	AHEN	DHEN
bit 7							bit 0

Legend:		
R = Readable bit	W = Writable bit	U = Unimplemented bit, read as ‘0’
u = Bit is unchanged	x = Bit is unknown	-n/n = Value at POR and BOR/Value at all other Resets
‘1’ = Bit is set	‘0’ = Bit is cleared	

bit 7 **ACKTIM:** Acknowledge Time Status bit (I^2C mode only)(3)
1 = Indicates the I^2C bus is in an Acknowledge sequence, set on 8th falling edge of SCL clock
0 = Not an Acknowledge sequence, cleared on 9TH rising edge of SCL clock

bit 6 **PCIE**: Stop Condition Interrupt Enable bit (I^2C mode only)
1 = Enable interrupt on detection of Stop condition
0 = Stop detection interrupts are disabled(2)

bit 5 **SCIE**: Start Condition Interrupt Enable bit (I^2C mode only)
1 = Enable interrupt on detection of Start or Restart conditions
0 = Start detection interrupts are disabled(2)

bit 4 **BOEN:** Buffer Overwrite Enable bit
In SPI Client mode:(1)
1 = SSPBUF updates every time that a new data byte is shifted in ignoring the BF bit
0 = If new byte is received with BF bit of the SSPSTAT register already set, SSPOV bit of the SSPCON1 register is set, and the buffer is not updated
In I^2C Host mode and SPI Host mode:
This bit is ignored.
In I^2C Client mode:
1 = SSPBUF is updated and $\overline{ACK}$ is generated for a received address/data byte, ignoring the state of the SSPOV bit only if the BF bit = 0.
0 = SSPBUF is only updated when SSPOV is clear

bit 3 **SDAHT:** SDA Hold Time Selection bit (I^2C mode only)
1 = Minimum of 300 ns hold time on SDA after the falling edge of SCL
0 = Minimum of 100 ns hold time on SDA after the falling edge of SCL

bit 2 **SBCDE:** Client Mode Bus Collision Detect Enable bit (I^2C Client mode only)
If, on the rising edge of SCL, SDA is sampled low when the module is outputting a high state, the BCL1IF bit of the PIR3 register is set, and bus goes Idle
1 = Enable client bus collision interrupts
0 = Client bus collision interrupts are disabled

bit 1 **AHEN:** Address Hold Enable bit (I^2C Client mode only)
1 = Following the eighth falling edge of SCL for a matching received address byte; CKP bit of the SSPCON1 register will be cleared and the SCL will be held low.
0 = Address holding is disabled

bit 0 **DHEN:** Data Hold Enable bit (I^2C Client mode only)
1 = Following the eighth falling edge of SCL for a received data byte; client hardware clears the CKP bit of the SSPCON1 register and SCL is held low.
0 = Data holding is disabled

Note 1: For daisy-chained SPI operation; allows the user to ignore all but the last received byte. SSPOV is still set when a new byte is received and BF = 1, but hardware continues to write the most recent byte to SSPBUF.
2: This bit has no effect in Client modes that Start and Stop condition detection is explicitly listed as enabled.
3: The ACKTIM Status bit is only active when the AHEN bit or DHEN bit is set.

REGISTER 32-5: SSP1MSK: SSP1 MASK REGISTER

R/W-1/1	R/W-1/1	R/W-1/1	R/W-1/1	R/W-1/1	R/W-1/1	R/W-1/1	R/W-1/1
SSP1MSK[7:0]							
bit 7							bit 0

Legend:		
R = Readable bit	W = Writable bit	U = Unimplemented bit, read as ‘0’
u = Bit is unchanged	x = Bit is unknown	-n/n = Value at POR and BOR/Value at all other Resets
‘1’ = Bit is set	‘0’ = Bit is cleared	

bit 7-1 **SSP1MSK[7:1]:** Mask bits
`1` = The received address bit n is compared to SSP1ADD[n] to detect I^2C address match
`0` = The received address bit n is not used to detect I^2C address match

bit 0 **SSP1MSK[0]:** Mask bit for I^2C Client mode, 10-bit Address
I^2C Client mode, 10-bit address (SSPM[3:0] = `0111` or `1111`):
`1` = The received address bit 0 is compared to SSP1ADD[0] to detect I^2C address match
`0` = The received address bit 0 is not used to detect I^2C address match
I^2C Client mode, 7-bit address:
MSK0 bit is ignored.

REGISTER 32-6: SSP1ADD: MSSP1 ADDRESS AND BAUD RATE REGISTER (I^2C MODE)

R/W-0/0	R/W-0/0	R/W-0/0	R/W-0/0	R/W-0/0	R/W-0/0	R/W-0/0	R/W-0/0
SSP1ADD[7:0]							
bit 7							bit 0

Legend:		
R = Readable bit	W = Writable bit	U = Unimplemented bit, read as ‘0’
u = Bit is unchanged	x = Bit is unknown	-n/n = Value at POR and BOR/Value at all other Resets
‘1’ = Bit is set	‘0’ = Bit is cleared	

Host mode:

bit 7-0 **SSP1ADD[7:0]:** Baud Rate Clock Divider bits
SCL pin clock period = ((ADD[7:0] + 1) *4)/FOSC

10-Bit Client mode – Most Significant Address Byte:

bit 7-3 **Not used:** Unused for Most Significant Address Byte. Bit state of this register is a “don’t care”. Bit pattern sent by host is fixed by I^2C specification and must be equal to ‘`11110`’. However, those bits are compared by hardware and are not affected by the value in this register.

bit 2-1 **SSP1ADD[2:1]:** Two Most Significant bits of 10-bit address

bit 0 **Not used:** Unused in this mode. Bit state is a “don’t care”.

10-Bit Client mode – Least Significant Address Byte:

bit 7-0 **SSP1ADD[7:0]:** Eight Least Significant bits of 10-bit address

7-Bit Client mode:

bit 7-1 **SSP1ADD[7:1]:** 7-bit address

bit 0 **Not used:** Unused in this mode. Bit state is a “don’t care”.

REGISTER 32-7: SSP1BUF: MSSP1 BUFFER REGISTER

R/W-x	R/W-x	R/W-x	R/W-x	R/W-x	R/W-x	R/W-x	R/W-x
SSP1BUF[7:0]							
bit 7							bit 0

Legend:		
R = Readable bit	W = Writable bit	U = Unimplemented bit, read as ‘0’
u = Bit is unchanged	x = Bit is unknown	-n/n = Value at POR and BOR/Value at all other Resets
‘1’ = Bit is set	‘0’ = Bit is cleared	

bit 7-0 **SSP1BUF[7:0]:** MSSP Buffer bits

TABLE 32-3: SUMMARY OF REGISTERS ASSOCIATED WITH MSSP1

Name	Bit 7	Bit 6	Bit 5	Bit 4	Bit 3	Bit 2	Bit 1	Bit 0	Register on Page
INTCON	GIE	PEIE	—	—	—	—	—	INTEDG	125
PIR1	OSFIF	CSWIF	—	—	—	—	—	ADIF	135
PIE1	OSFIE	CSWIE	—	—	—	—	—	ADIE	127
SSP1STAT	SMP	CKE	D/$\overline{A}$	P	S	R/$\overline{W}$	UA	BF	421
SSP1CON1	WCOL	SSPOV	SSPEN	CKP	SSPM[3:0]				422
SSP1CON2	GCEN	ACKSTAT	ACKDT	ACKEN	RCEN	PEN	RSEN	SEN	423
SSP1CON3	ACKTIM	PCIE	SCIE	BOEN	SDAHT	SBCDE	AHEN	DHEN	421
SSP1MSK	SSPMSK[7:0]								425
SSP1ADD	SSPADD[7:0]								425
SSP1BUF	SSPBUF[7:0]								426
SSP1CLKPPS	—	—	SSP1CLKPPS[5:0]						200
SSP1DATPPS	—	—	SSP1DATPPS[5:0]						200
SSP1SSPPS	—	—	SSP1SSPPS[5:0]						200
RxyPPS	—	—	—	RxyPPS[4:0]					201

Legend: — = Unimplemented location, read as ‘0’. Shaded cells are not used by the MSSP module

Note 1: When using designated I^2C pins, the associated pin values in INLVLx will be ignored.

33.0 ENHANCED UNIVERSAL SYNCHRONOUS ASYNCHRONOUS RECEIVER TRANSMITTER (EUSART)

The Enhanced Universal Synchronous Asynchronous Receiver Transmitter (EUSART) module is a serial I/O communications peripheral. It contains all the clock generators, shift registers and data buffers necessary to perform an input or output serial data transfer independent of device program execution. The EUSART, also known as a Serial Communications Interface (SCI), can be configured as a full-duplex asynchronous system or half-duplex synchronous system. Full-Duplex mode is useful for communications with peripheral systems, such as CRT terminals and personal computers. Half-Duplex Synchronous mode is intended for communications with peripheral devices, such as A/D or D/A integrated circuits, serial EEPROMs or other microcontrollers. These devices typically do not have internal clocks for baud rate generation and require the external clock signal provided by a host synchronous device.

Note: Two identical EUSART modules are implemented on this device, EUSART1 and EUSART2. All references to EUSART1 apply to EUSART2 as well.

The EUSART module includes the following capabilities:

- Full-duplex asynchronous transmit and receive
- Two-character input buffer
- One-character output buffer
- Programmable 8-bit or 9-bit character length
- Address detection in 9-bit mode
- Input buffer overrun error detection
- Received character framing error detection
- Half-duplex synchronous host
- Half-duplex synchronous client
- Programmable clock polarity in synchronous modes
- Sleep operation

The EUSART module implements the following additional features, making it ideally suited for use in Local Interconnect Network (LIN) bus systems:

- Automatic detection and calibration of the baud rate
- Wake-up on Break reception
- 13-bit Break character transmit

Block diagrams of the EUSART transmitter and receiver are shown in Figure 33-1 and Figure 33-2.

The EUSART transmit output (TX_out) is available to the TX/CK pin and internally to the following peripherals:

- Configurable Logic Cell (CLC)

FIGURE 33-1: EUSART TRANSMIT BLOCK DIAGRAM

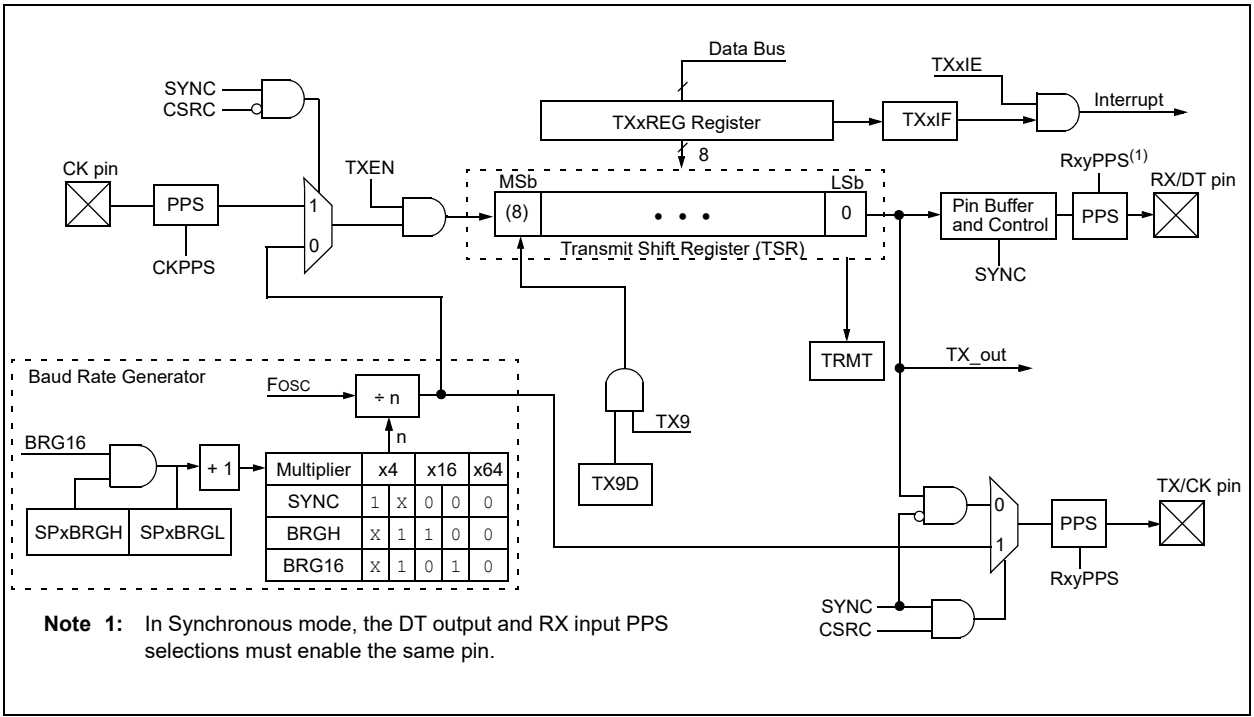

Note 1: In Synchronous mode, the DT output and RX input PPS selections must enable the same pin.

FIGURE 33-2: EUSART RECEIVE BLOCK DIAGRAM

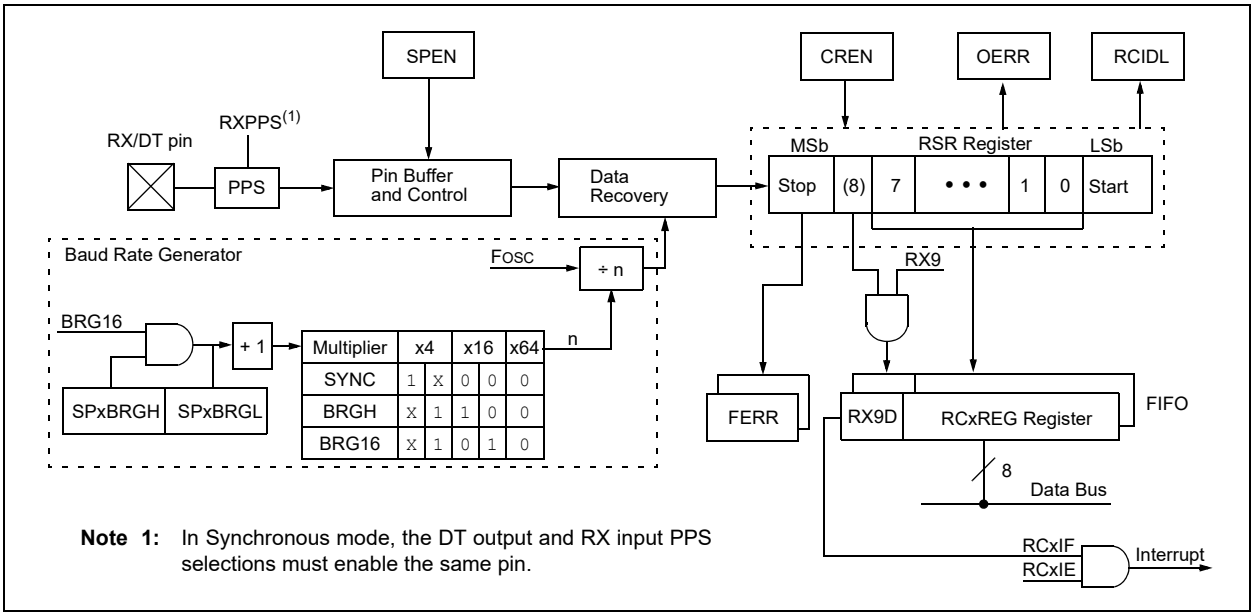

Note 1: In Synchronous mode, the DT output and RX input PPS selections must enable the same pin.

The operation of the EUSART module is controlled through three registers:

- Transmit Status and Control (TXxSTA)
- Receive Status and Control (RCxSTA)
- Baud Rate Control (BAUDxCON)

These registers are detailed in Register 33-1, Register 33-2 and Register 33-3, respectively.

The RX input pin is selected with the RXPPS. The CK input is selected with the TXPPS register. TX, CK, and DT output pins are selected with each pin's RxyPPS register. Since the RX input is coupled with the DT output in Synchronous mode, it is the user's responsibility to select the same pin for both of these functions when operating in Synchronous mode. The EUSART control logic will control the data direction drivers automatically.

33.1 EUSART Asynchronous Mode

The EUSART transmits and receives data using the standard non-return-to-zero (NRZ) format. NRZ is implemented with two levels: a VOH Mark state which represents a '1' data bit, and a VOL Space state which represents a '0' data bit. NRZ refers to the fact that consecutively transmitted data bits of the same value stay at the output level of that bit without returning to a neutral level between each bit transmission. An NRZ transmission port idles in the Mark state. Each character transmission consists of one Start bit followed by eight or nine data bits and is always terminated by one or more Stop bits. The Start bit is always a space and the Stop bits are always marks. The most common data format is eight bits. Each transmitted bit persists for a period of 1/(Baud Rate). An on-chip dedicated 8-bit/16-bit Baud Rate Generator is used to derive standard baud rate frequencies from the system oscillator. See Table 33-3 for examples of baud rate configurations.

The EUSART transmits and receives the LSb first. The EUSART's transmitter and receiver are functionally independent, but share the same data format and baud rate. Parity is not supported by the hardware, but can be implemented in software and stored as the ninth data bit.

33.1.1 EUSART ASYNCHRONOUS TRANSMITTER

The EUSART transmitter block diagram is shown in Figure 33-1. The heart of the transmitter is the serial Transmit Shift Register (TSR), which is not directly accessible by software. The TSR obtains its data from the transmit buffer, which is the TXxREG register.

33.1.1.1 Enabling the Transmitter

The EUSART transmitter is enabled for asynchronous operations by configuring the following three control bits:

- TXEN = 1
- SYNC = 0
- SPEN = 1

All other EUSART control bits are assumed to be in their default state.

Setting the TXEN bit of the TXxSTA register enables the transmitter circuitry of the EUSART. Clearing the SYNC bit of the TXxSTA register configures the EUSART for asynchronous operation. Setting the SPEN bit of the RCxSTA register enables the EUSART and automatically configures the TX/CK I/O pin as an output. If the TX/CK pin is shared with an analog peripheral, the analog I/O function must be disabled by clearing the corresponding ANSEL bit.

Note:	The TXxIF Transmitter Interrupt flag is set when the TXEN enable bit is set.

33.1.1.2 Transmitting Data

A transmission is initiated by writing a character to the TXxREG register. If this is the first character, or the previous character has been completely flushed from the TSR, the data in the TXxREG is immediately transferred to the TSR register. If the TSR still contains all or part of a previous character, the new character data is held in the TXxREG until the Stop bit of the previous character has been transmitted. The pending character in the TXxREG is then transferred to the TSR in one TCY immediately following the Stop bit transmission. The transmission of the Start bit, data bits and Stop bit sequence commences immediately following the transfer of the data to the TSR from the TXxREG.

33.1.1.3 Transmit Data Polarity

The polarity of the transmit data can be controlled with the SCKP bit of the BAUDxCON register. The default state of this bit is '0' which selects high true transmit Idle and data bits. Setting the SCKP bit to '1' will invert the transmit data resulting in low true Idle and data bits. The SCKP bit controls transmit data polarity in Asynchronous mode only. In Synchronous mode, the SCKP bit has a different function. See **Section 33.4.1.2 "Clock Polarity"**.

33.1.1.4 Transmit Interrupt Flag

The TXxIF interrupt flag bit of the PIR3 register is set whenever the EUSART transmitter is enabled and no character is being held for transmission in the TXxREG. In other words, the TXxIF bit is only clear when the TSR is busy with a character and a new character has been queued for transmission in the TXxREG. The TXxIF flag bit is not cleared immediately upon writing TXxREG. TXxIF becomes valid in the second instruction cycle following the write execution. Polling TXxIF immediately following the TXxREG write will return invalid results. The TXxIF bit is read-only, it cannot be set or cleared by software.

The TXxIF interrupt can be enabled by setting the TXxIE interrupt enable bit of the PIE3 register. However, the TXxIF flag bit will be set whenever the TXxREG is empty, regardless of the state of TXxIE enable bit.

To use interrupts when transmitting data, set the TXxIE bit only when there is more data to send. Clear the TXxIE interrupt enable bit upon writing the last character of the transmission to the TXxREG.

33.1.1.5 TSR Status

The TRMT bit of the TXxSTA register indicates the status of the TSR register. This is a read-only bit. The TRMT bit is set when the TSR register is empty and is cleared when a character is transferred to the TSR register from the TXxREG. The TRMT bit remains clear until all bits have been shifted out of the TSR register. No interrupt logic is tied to this bit, so the user has to poll this bit to determine the TSR status.

Note:	The TSR register is not mapped in data memory, so it is not available to the user.

33.1.1.6 Transmitting 9-Bit Characters

The EUSART supports 9-bit character transmissions. When the TX9 bit of the TXxSTA register is set, the EUSART will shift nine bits out for each character transmitted. The TX9D bit of the TXxSTA register is the ninth, and Most Significant data bit. When transmitting 9-bit data, the TX9D data bit must be written before writing the eight Least Significant bits into the TXxREG. All nine bits of data will be transferred to the TSR shift register immediately after the TXxREG is written.

A special 9-bit Address mode is available for use with multiple receivers. See **Section 33.1.2.7 "Address Detection"** for more information on the Address mode.

33.1.1.7 Asynchronous Transmission Setup:

1. Initialize the SPxBRGH, SPxBRGL register pair and the BRGH and BRG16 bits to achieve the desired baud rate (see **Section 33.3 "EUSART Baud Rate Generator (BRG)"**).
2. Enable the asynchronous serial port by clearing the SYNC bit and setting the SPEN bit.
3. If 9-bit transmission is desired, set the TX9 control bit. A set ninth data bit will indicate that the eight Least Significant data bits are an address when the receiver is set for address detection.
4. Set SCKP bit if inverted transmit is desired.
5. Enable the transmission by setting the TXEN control bit. This will cause the TXxIF interrupt bit to be set.
6. If interrupts are desired, set the TXxIE interrupt enable bit of the PIE3 register. An interrupt will occur immediately provided that the GIE and PEIE bits of the INTCON register are also set.
7. If 9-bit transmission is selected, the ninth bit may be loaded into the TX9D data bit.
8. Load 8-bit data into the TXxREG register. This will start the transmission.

FIGURE 33-3: ASYNCHRONOUS TRANSMISSION

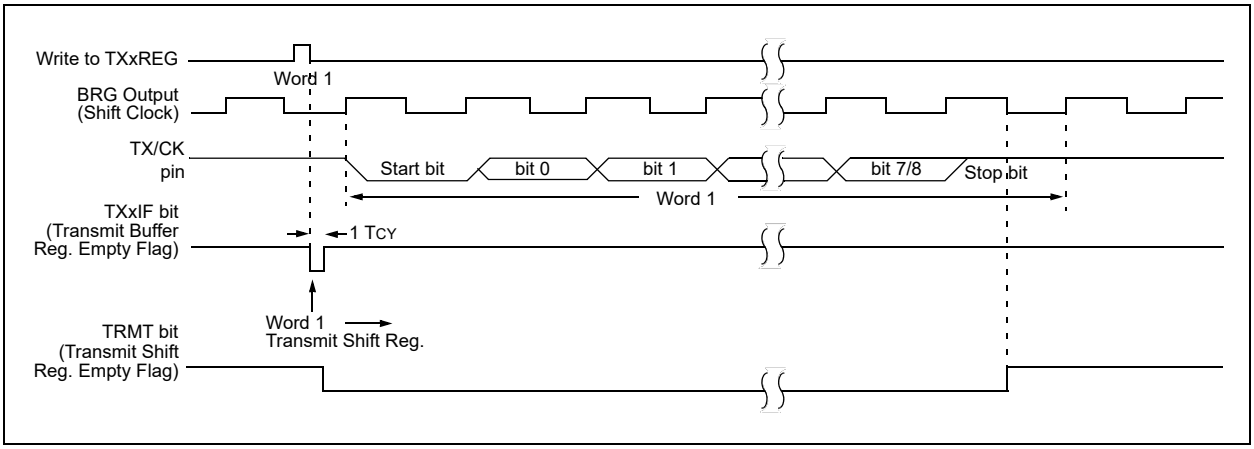

FIGURE 33-4: ASYNCHRONOUS TRANSMISSION (BACK-TO-BACK)

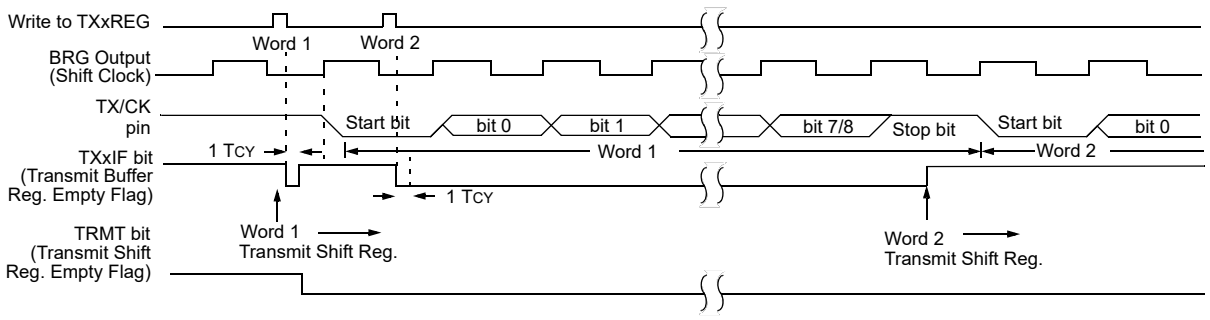

Note: This timing diagram shows two consecutive transmissions.

33.1.2 EUSART ASYNCHRONOUS RECEIVER

The Asynchronous mode is typically used in RS-232 systems. The receiver block diagram is shown in Figure 33-2. The data is received on the RX/DT pin and drives the data recovery block. The data recovery block is actually a high-speed shifter operating at 16 times the baud rate, whereas the serial Receive Shift Register (RSR) operates at the bit rate. When all eight or nine bits of the character have been shifted in, they are immediately transferred to a two character First-In-First-Out (FIFO) memory. The FIFO buffering allows reception of two complete characters and the start of a third character before software must start servicing the EUSART receiver. The FIFO and RSR registers are not directly accessible by software. Access to the received data is via the RCxREG register.

33.1.2.1 Enabling the Receiver

The EUSART receiver is enabled for asynchronous operation by configuring the following three control bits:

- CREN = 1
- SYNC = 0
- SPEN = 1

All other EUSART control bits are assumed to be in their default state.

Setting the CREN bit of the RCxSTA register enables the receiver circuitry of the EUSART. Clearing the SYNC bit of the TXxSTA register configures the EUSART for asynchronous operation. Setting the SPEN bit of the RCxSTA register enables the EUSART. The programmer must set the corresponding TRIS bit to configure the RX/DT I/O pin as an input.

Note:	If the RX/DT function is on an analog pin, the corresponding ANSEL bit must be cleared for the receiver to function.

33.1.2.2 Receiving Data

The receiver data recovery circuit initiates character reception on the falling edge of the first bit. The first bit, also known as the Start bit, is always a zero. The data recovery circuit counts one-half bit time to the center of the Start bit and verifies that the bit is still a zero. If it is not a zero then the data recovery circuit aborts character reception, without generating an error, and resumes looking for the falling edge of the Start bit. If the Start bit zero verification succeeds then the data recovery circuit counts a full bit time to the center of the next bit. The bit is then sampled by a majority detect circuit and the resulting '0' or '1' is shifted into the RSR. This repeats until all data bits have been sampled and shifted into the RSR. One final bit time is measured and the level sampled. This is the Stop bit, which is always a '1'. If the data recovery circuit samples a '0' in the Stop bit position then a framing error is set for this character, otherwise the framing error is cleared for this character. See **Section 33.1.2.4 "Receive Framing Error"** for more information on framing errors.

Immediately after all data bits and the Stop bit have been received, the character in the RSR is transferred to the EUSART receive FIFO and the RCxIF interrupt flag bit of the PIR3 register is set. The top character in the FIFO is transferred out of the FIFO by reading the RCxREG register.

Note:	If the receive FIFO is overrun, no additional characters will be received until the overrun condition is cleared. See **Section 33.1.2.5 "Receive Overrun Error"** for more information on overrun errors.

33.1.2.3 Receive Interrupts

The RCxIF interrupt flag bit of the PIR3 register is set whenever the EUSART receiver is enabled and there is an unread character in the receive FIFO. The RCxIF interrupt flag bit is read-only, it cannot be set or cleared by software.

RCxIF interrupts are enabled by setting all of the following bits:

- RCxIE, Interrupt Enable bit of the PIE3 register
- PEIE, Peripheral Interrupt Enable bit of the INTCON register
- GIE, Global Interrupt Enable bit of the INTCON register

The RCxIF interrupt flag bit will be set when there is an unread character in the FIFO, regardless of the state of interrupt enable bits.

33.1.2.4 Receive Framing Error

Each character in the receive FIFO buffer has a corresponding framing error Status bit. A framing error indicates that a Stop bit was not seen at the expected time. The framing error status is accessed via the FERR bit of the RCxSTA register. The FERR bit represents the status of the top unread character in the receive FIFO. Therefore, the FERR bit must be read before reading the RCxREG.

The FERR bit is read-only and only applies to the top unread character in the receive FIFO. A framing error (FERR = 1) does not preclude reception of additional characters. It is not necessary to clear the FERR bit. Reading the next character from the FIFO buffer will advance the FIFO to the next character and the next corresponding framing error.

The FERR bit can be forced clear by clearing the SPEN bit of the RCxSTA register which resets the EUSART. Clearing the CREN bit of the RCxSTA register does not affect the FERR bit. A framing error by itself does not generate an interrupt.

Note:	If all receive characters in the receive FIFO have framing errors, repeated reads of the RCxREG will not clear the FERR bit.

33.1.2.5 Receive Overrun Error

The receive FIFO buffer can hold two characters. An overrun error will be generated if a third character, in its entirety, is received before the FIFO is accessed. When this happens the OERR bit of the RCxSTA register is set. The characters already in the FIFO buffer can be read but no additional characters will be received until the error is cleared. The error must be cleared by either clearing the CREN bit of the RCxSTA register or by resetting the EUSART by clearing the SPEN bit of the RCxSTA register.

33.1.2.6 Receiving 9-Bit Characters

The EUSART supports 9-bit character reception. When the RX9 bit of the RCxSTA register is set the EUSART will shift nine bits into the RSR for each character received. The RX9D bit of the RCxSTA register is the ninth and Most Significant data bit of the top unread character in the receive FIFO. When reading 9-bit data from the receive FIFO buffer, the RX9D data bit must be read before reading the eight Least Significant bits from the RCxREG.

33.1.2.7 Address Detection

A special Address Detection mode is available for use when multiple receivers share the same transmission line, such as in RS-485 systems. Address detection is enabled by setting the ADDEN bit of the RCxSTA register.

Address detection requires 9-bit character reception. When address detection is enabled, only characters with the ninth data bit set will be transferred to the receive FIFO buffer, thereby setting the RCxIF interrupt bit. All other characters will be ignored.

Upon receiving an address character, user software determines if the address matches its own. Upon address match, user software must disable address detection by clearing the ADDEN bit before the next Stop bit occurs. When user software detects the end of the message, determined by the message protocol used, software places the receiver back into the Address Detection mode by setting the ADDEN bit.

© 2017-2021 Microchip Technology Inc.

33.1.2.8 Asynchronous Reception Setup:

1. Initialize the SPxBRGH, SPxBRGL register pair and the BRGH and BRG16 bits to achieve the desired baud rate (see **Section 33.3 "EUSART Baud Rate Generator (BRG)"**).
2. Clear the ANSEL bit for the RX pin (if applicable).
3. Enable the serial port by setting the SPEN bit. The SYNC bit must be clear for asynchronous operation.
4. If interrupts are desired, set the RCxIE bit of the PIE3 register and the GIE and PEIE bits of the INTCON register.
5. If 9-bit reception is desired, set the RX9 bit.
6. Enable reception by setting the CREN bit.
7. The RCxIF interrupt flag bit will be set when a character is transferred from the RSR to the receive buffer. An interrupt will be generated if the RCxIE interrupt enable bit was also set.
8. Read the RCxSTA register to get the error flags and, if 9-bit data reception is enabled, the ninth data bit.
9. Get the received eight Least Significant data bits from the receive buffer by reading the RCxREG register.
10. If an overrun occurred, clear the OERR flag by clearing the CREN receiver enable bit.

33.1.2.9 9-bit Address Detection Mode Setup

This mode is typically used in RS-485 systems. To set up an Asynchronous Reception with Address Detect Enable:

1. Initialize the SPxBRGH, SPxBRGL register pair and the BRGH and BRG16 bits to achieve the desired baud rate (see **Section 33.3 "EUSART Baud Rate Generator (BRG)"**).
2. Clear the ANSEL bit for the RX pin (if applicable).
3. Enable the serial port by setting the SPEN bit. The SYNC bit must be clear for asynchronous operation.
4. If interrupts are desired, set the RCxIE bit of the PIE3 register and the GIE and PEIE bits of the INTCON register.
5. Enable 9-bit reception by setting the RX9 bit.
6. Enable address detection by setting the ADDEN bit.
7. Enable reception by setting the CREN bit.
8. The RCxIF interrupt flag bit will be set when a character with the ninth bit set is transferred from the RSR to the receive buffer. An interrupt will be generated if the RCxIE interrupt enable bit was also set.
9. Read the RCxSTA register to get the error flags. The ninth data bit will always be set.
10. Get the received eight Least Significant data bits from the receive buffer by reading the RCxREG register. Software determines if this is the device's address.
11. If an overrun occurred, clear the OERR flag by clearing the CREN receiver enable bit.
12. If the device has been addressed, clear the ADDEN bit to allow all received data into the receive buffer and generate interrupts.

FIGURE 33-5: ASYNCHRONOUS RECEPTION

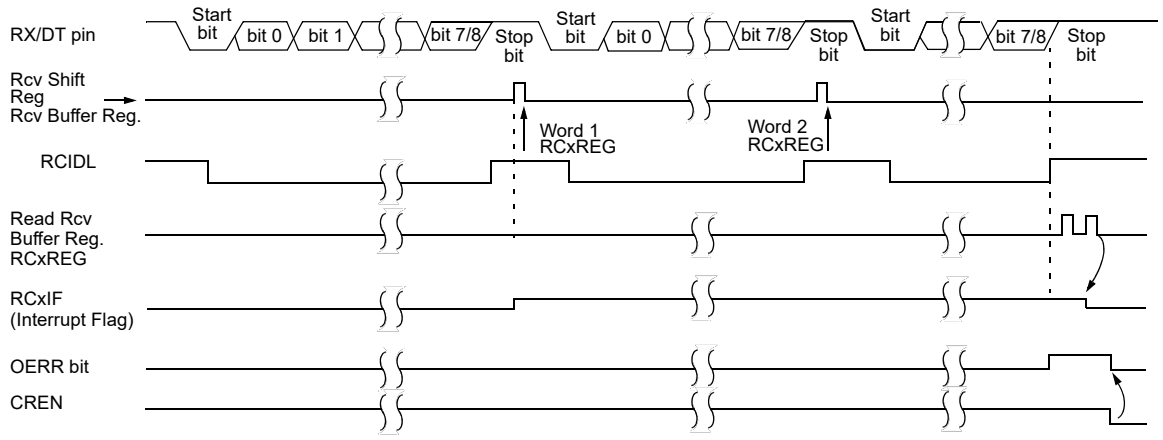

Note: This timing diagram shows three words appearing on the RX input. The RCxREG (receive buffer) is read after the third word, causing the OERR (overrun) bit to be set.

33.2 Clock Accuracy with Asynchronous Operation

The factory calibrates the internal oscillator block output (INTOSC). However, the INTOSC frequency may drift as VDD or temperature changes, and this directly affects the asynchronous baud rate. Two methods may be used to adjust the baud rate clock, but both require a reference clock source of some kind.

The first (preferred) method uses the OSCTUNE register to adjust the INTOSC output. Adjusting the value in the OSCTUNE register allows for fine resolution changes to the system clock source. See **Section 9.2.2.2 "Internal Oscillator Frequency Adjustment"** for more information.

The other method adjusts the value in the Baud Rate Generator. This can be done automatically with the Auto-Baud Detect feature (see **Section 33.3.1 "Auto-Baud Detect"**). There may not be fine enough resolution when adjusting the Baud Rate Generator to compensate for a gradual change in the peripheral clock frequency.

33.3 EUSART Baud Rate Generator (BRG)

The Baud Rate Generator (BRG) is an 8-bit or 16-bit timer that is dedicated to the support of both the asynchronous and synchronous EUSART operation. By default, the BRG operates in 8-bit mode. Setting the BRG16 bit of the BAUDxCON register selects 16-bit mode.

The SPxBRGH, SPxBRGL register pair determines the period of the free running baud rate timer. In Asynchronous mode the multiplier of the baud rate period is determined by both the BRGH bit of the TXxSTA register and the BRG16 bit of the BAUDxCON register. In Synchronous mode, the BRGH bit is ignored.

Table 33-1 contains the formulas for determining the baud rate. Example 33-1 provides a sample calculation for determining the baud rate and baud rate error.

Typical baud rates and error values for various Asynchronous modes have been computed for the user's convenience and are shown in Table 33-3. It may be advantageous to use the high baud rate (BRGH = `1`), or the 16-bit BRG (BRG16 = `1`) to reduce the baud rate error. The 16-bit BRG mode is used to achieve slow baud rates for fast oscillator frequencies.

Writing a new value to the SPxBRGH, SPxBRGL register pair causes the BRG timer to be reset (or cleared). This ensures that the BRG does not wait for a timer overflow before outputting the new baud rate.

If the system clock is changed during an active receive operation, a receive error or data loss may result. To avoid this problem, check the status of the RCIDL bit to make sure that the receive operation is Idle before changing the system clock.

EXAMPLE 33-1: CALCULATING BAUD RATE ERROR

For a device with FOSC of 16 MHz, desired baud rate of 9600, Asynchronous mode, 8-bit BRG:

$$\text{Desired Baud Rate} = \frac{F_{OSC}}{64([SPBRGH:SPBRGL] + 1)}$$

Solving for SPxBRGH:SPxBRGL:

$$X = \frac{\frac{F_{OSC}}{\text{Desired Baud Rate}}}{64} - 1$$

$$= \frac{\frac{16000000}{9600}}{64} - 1$$

$$= [25.042] = 25$$

$$\text{Calculated Baud Rate} = \frac{16000000}{64(25 + 1)}$$

$$= 9615$$

$$\text{Error} = \frac{\text{Calc. Baud Rate} - \text{Desired Baud Rate}}{\text{Desired Baud Rate}}$$

$$= \frac{(9615 - 9600)}{9600} = 0.16\%$$

33.3.1 AUTO-BAUD DETECT

The EUSART module supports automatic detection and calibration of the baud rate.

In the Auto-Baud Detect (ABD) mode, the clock to the BRG is reversed. Rather than the BRG clocking the incoming RX signal, the RX signal is timing the BRG. The Baud Rate Generator is used to time the period of a received 55h (ASCII “U”) which is the Sync character for the LIN bus. The unique feature of this character is that it has five rising edges including the Stop bit edge.

Setting the ABDEN bit of the BAUDxCON register starts the auto-baud calibration sequence. While the ABD sequence takes place, the EUSART state machine is held in Idle. On the first rising edge of the receive line, after the Start bit, the SPxBRG begins counting up using the BRG counter clock as shown in Figure 33-6. The fifth rising edge will occur on the RX pin at the end of the eighth bit period. At that time, an accumulated value totaling the proper BRG period is left in the SPxBRGH, SPxBRGL register pair, the ABDEN bit is automatically cleared and the RCxIF interrupt flag is set. The value in RCxREG needs to be read to clear the RCxIF interrupt. RCxREG content may be discarded. When calibrating for modes that do not use the SPxBRGH register the user can verify that the SPxBRGL register did not overflow by checking for 00h in the SPxBRGH register.

The BRG auto-baud clock is determined by the BRG16 and BRGH bits as shown in Table 33-1. During ABD, both the SPxBRGH and SPxBRGL registers are used as a 16-bit counter, independent of the BRG16 bit setting. While calibrating the baud rate period, the SPxBRGH and SPxBRGL registers are clocked at 1/8th the BRG base clock rate. The resulting byte measurement is the average bit time when clocked at full speed.

Note 1: If the WUE bit is set with the ABDEN bit, auto-baud detection will occur on the byte following the Break character (see **Section 33.3.3 “Auto-Wake-up on Break”**).

2: It is up to the user to determine that the incoming character baud rate is within the range of the selected BRG clock source. Some combinations of oscillator frequency and EUSART baud rates are not possible.

3: During the auto-baud process, the auto-baud counter starts counting at one. Upon completion of the auto-baud sequence, to achieve maximum accuracy, subtract 1 from the SPxBRGH:SPxBRGL register pair.

TABLE 33-1: BRG COUNTER CLOCK RATES

BRG16	BRGH	BRG Base Clock	BRG ABD Clock
0	0	FOSC/64	FOSC/512
0	1	FOSC/16	FOSC/128
1	0	FOSC/16	FOSC/128
1	1	FOSC/4	FOSC/32

Note: During the ABD sequence, SPxBRGL and SPxBRGH registers are both used as a 16-bit counter, independent of the BRG16 setting.

FIGURE 33-6: AUTOMATIC BAUD RATE CALIBRATION

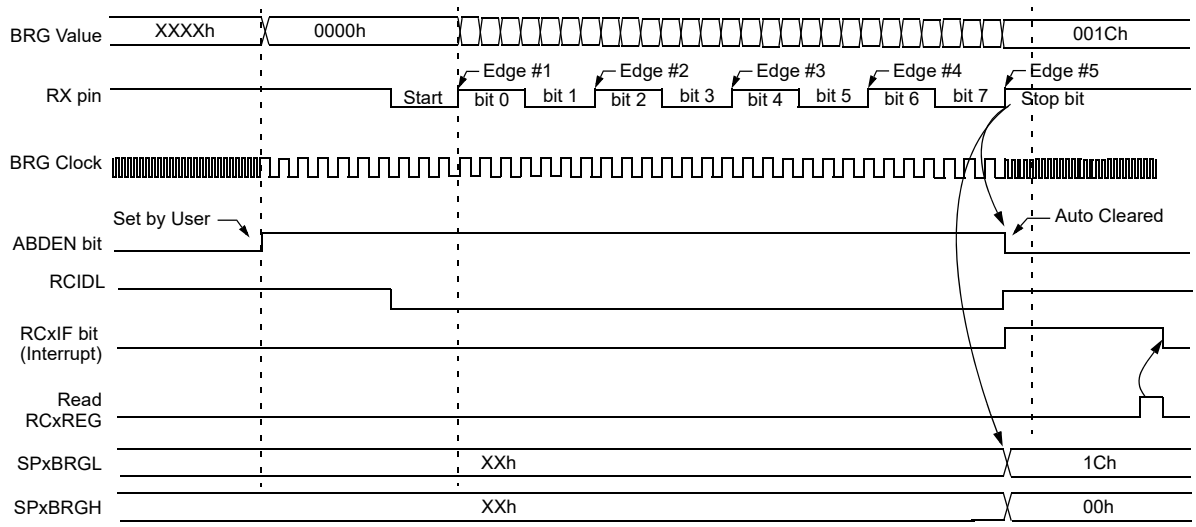

Note 1: The ABD sequence requires the **EUSART** module to be configured in Asynchronous mode.

33.3.2 AUTO-BAUD OVERFLOW

During the course of automatic baud detection, the ABDOVF bit of the BAUDxCON register will be set if the baud rate counter overflows before the fifth rising edge is detected on the RX pin. The ABDOVF bit indicates that the counter has exceeded the maximum count that can fit in the 16 bits of the SPxBRGH:SPxBRGL register pair. The overflow condition will set the RCxIF flag. The counter continues to count until the fifth rising edge is detected on the RX pin. The RCIDL bit will remain false ('0') until the fifth rising edge at which time the RCIDL bit will be set. If the RCxREG is read after the overflow occurs but before the fifth rising edge then the fifth rising edge will set the RCxIF again.

Terminating the auto-baud process early to clear an overflow condition will prevent proper detection of the sync character fifth rising edge. If any falling edges of the sync character have not yet occurred when the ABDEN bit is cleared then those will be falsely detected as Start bits. The following steps are recommended to clear the overflow condition:

1. Read RCxREG to clear RCxIF.
2. If RCIDL is '0' then wait for RDCIF and repeat step 1.
3. Clear the ABDOVF bit.

33.3.3 AUTO-WAKE-UP ON BREAK

During Sleep mode, all clocks to the EUSART are suspended. Because of this, the Baud Rate Generator is inactive and a proper character reception cannot be performed. The Auto-Wake-up feature allows the controller to wake-up due to activity on the RX/DT line. This feature is available only in Asynchronous mode.

The Auto-Wake-up feature is enabled by setting the WUE bit of the BAUDxCON register. Once set, the normal receive sequence on RX/DT is disabled, and the EUSART remains in an Idle state, monitoring for a wake-up event independent of the CPU mode. A wake-up event consists of a high-to-low transition on the RX/DT line. (This coincides with the start of a Sync Break or a wake-up signal character for the LIN protocol.)

The EUSART module generates an RCxIF interrupt coincident with the wake-up event. The interrupt is generated synchronously to the Q clocks in normal CPU operating modes (Figure 33-7), and asynchronously if the device is in Sleep mode (Figure 33-8). The interrupt condition is cleared by reading the RCxREG register.

The WUE bit is automatically cleared by the low-to-high transition on the RX line at the end of the Break. This signals to the user that the Break event is over. At this point, the EUSART module is in Idle mode waiting to receive the next character.

33.3.3.1 Special Considerations

Break Character

To avoid character errors or character fragments during a wake-up event, the wake-up character must be all zeros.

When the wake-up is enabled the function works independent of the low time on the data stream. If the WUE bit is set and a valid nonzero character is received, the low time from the Start bit to the first rising edge will be interpreted as the wake-up event. The remaining bits in the character will be received as a fragmented character and subsequent characters can result in framing or overrun errors.

Therefore, the initial character in the transmission must be all '0's. This must be ten or more bit times, 13-bit times recommended for LIN bus, or any number of bit times for standard RS-232 devices.

Oscillator Start-up Time

Oscillator start-up time must be considered, especially in applications using oscillators with longer start-up intervals (i.e., LP, XT or HS/PLL mode). The Sync Break (or wake-up signal) character must be of sufficient length, and be followed by a sufficient interval, to allow enough time for the selected oscillator to start and provide proper initialization of the EUSART.

WUE Bit

The wake-up event causes a receive interrupt by setting the RCxIF bit. The WUE bit is cleared in hardware by a rising edge on RX/DT. The interrupt condition is then cleared in software by reading the RCxREG register and discarding its contents.

To ensure that no actual data is lost, check the RCIDL bit to verify that a receive operation is not in process before setting the WUE bit. If a receive operation is not occurring, the WUE bit may then be set just prior to entering the Sleep mode.

FIGURE 33-7: AUTO-WAKE-UP (WUE) BIT TIMING DURING NORMAL OPERATION

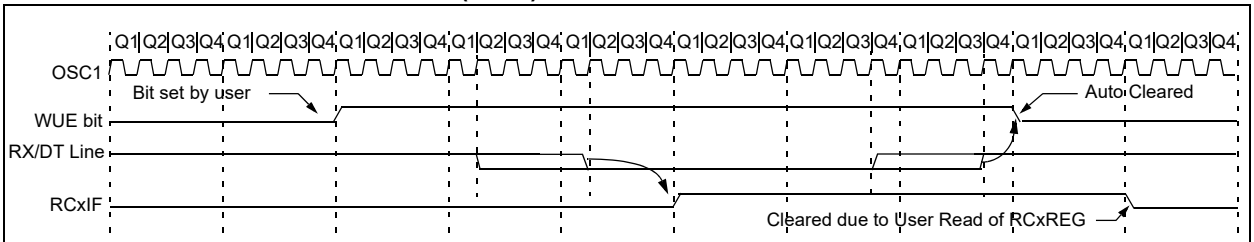

Note 1: The **EUSART** remains in Idle while the WUE bit is set.

FIGURE 33-8: AUTO-WAKE-UP (WUE) BIT TIMINGS DURING SLEEP

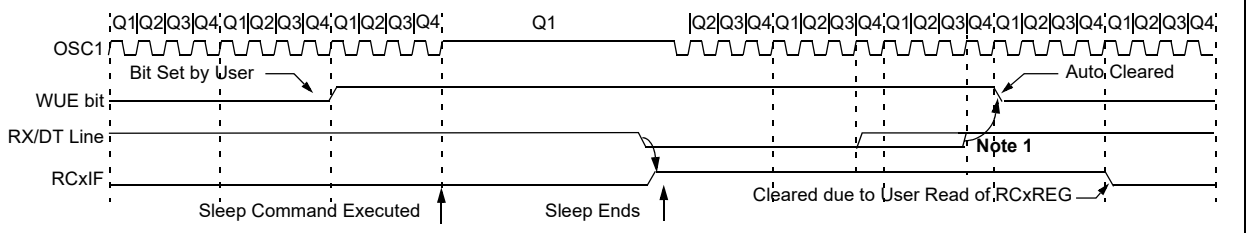

Note 1: If the wake-up event requires long oscillator warm-up time, the automatic clearing of the WUE bit can occur while the `stposc` signal is still active. This sequence may not depend on the presence of Q clocks.

2: The **EUSART** remains in Idle while the WUE bit is set.

33.3.4 BREAK CHARACTER SEQUENCE

The EUSART module has the capability of sending the special Break character sequences that are required by the LIN bus standard. A Break character consists of a Start bit, followed by 12 ‘`0`’ bits and a Stop bit.

To send a Break character, set the SENDB and TXEN bits of the TXxSTA register. The Break character transmission is then initiated by a write to the TXxREG. The value of data written to TXxREG will be ignored and all ‘`0`’s will be transmitted.

The SENDB bit is automatically reset by hardware after the corresponding Stop bit is sent. This allows the user to preload the transmit FIFO with the next transmit byte following the Break character (typically, the Sync character in the LIN specification).

The TRMT bit of the TXxSTA register indicates when the transmit operation is Active or Idle, just as it does during normal transmission. See Figure 33-9 for the timing of the Break character sequence.

33.3.4.1 Break and Sync Transmit Sequence

The following sequence will start a message frame header made up of a Break, followed by an auto-baud Sync byte. This sequence is typical of a LIN bus host.

1. Configure the EUSART for the desired mode.
2. Set the TXEN and SENDB bits to enable the Break sequence.
3. Load the TXxREG with a dummy character to initiate transmission (the value is ignored).
4. Write ‘55h’ to TXxREG to load the Sync character into the transmit FIFO buffer.
5. After the Break has been sent, the SENDB bit is reset by hardware and the Sync character is then transmitted.

When the TXxREG becomes empty, as indicated by the TXxIF, the next data byte can be written to TXxREG.

33.3.5 RECEIVING A BREAK CHARACTER

The Enhanced EUSART module can receive a Break character in two ways.

The first method to detect a Break character uses the FERR bit of the RCxSTA register and the received data as indicated by RCxREG. The Baud Rate Generator is assumed to have been initialized to the expected baud rate.

A Break character has been received when:

- RCxIF bit is set
- FERR bit is set
- RCxREG = 00h

The second method uses the Auto-Wake-up feature described in **Section 33.3.3 "Auto-Wake-up on Break"**. By enabling this feature, the EUSART will sample the next two transitions on RX/DT, cause an RCxIF interrupt, and receive the next data byte followed by another interrupt.

Note that following a Break character, the user will typically want to enable the Auto-Baud Detect feature. For both methods, the user can set the ABDEN bit of the BAUDxCON register before placing the EUSART in Sleep mode.

FIGURE 33-9: SEND BREAK CHARACTER SEQUENCE

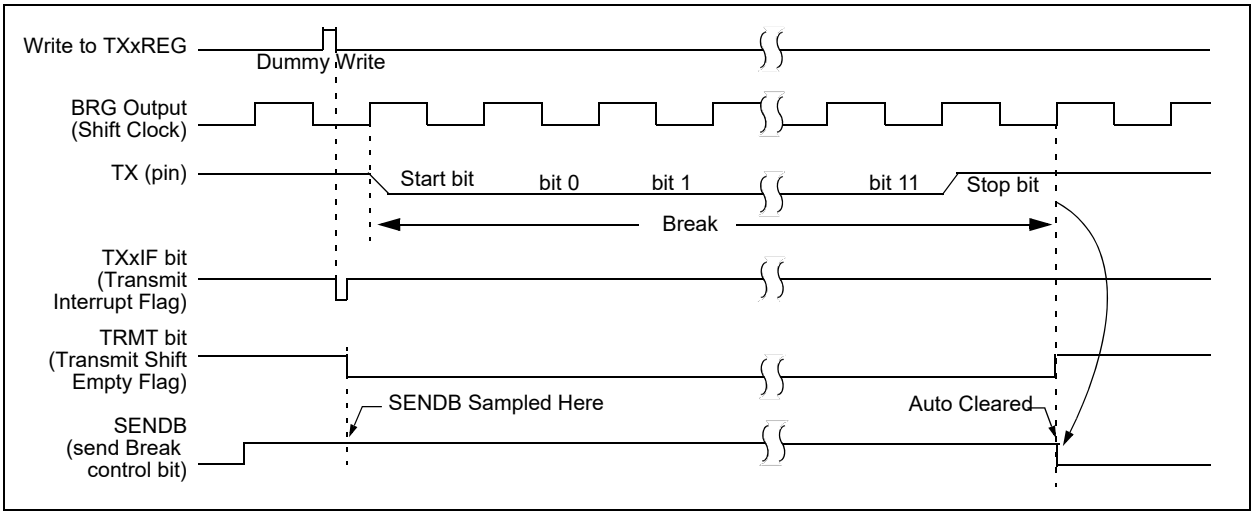

33.4 EUSART Synchronous Mode

Synchronous serial communications are typically used in systems with a single host and one or more clients. The host device contains the necessary circuitry for baud rate generation and supplies the clock for all devices in the system. Client devices can take advantage of the host clock by eliminating the internal clock generation circuitry.

There are two signal lines in Synchronous mode: a bidirectional data line and a clock line. Clients use the external clock supplied by the host to shift the serial data into and out of their respective receive and transmit shift registers. Since the data line is bidirectional, synchronous operation is half-duplex only. Half-duplex refers to the fact that host and client devices can receive and transmit data but not both simultaneously. The EUSART can operate as either a host or client device.

Start and Stop bits are not used in synchronous transmissions.

33.4.1 SYNCHRONOUS HOST MODE

The following bits are used to configure the EUSART for synchronous host operation:

- SYNC = 1
- CSRC = 1
- SREN = 0 (for transmit); SREN = 1 (for receive)
- CREN = 0 (for transmit); CREN = 1 (for receive)
- SPEN = 1

Setting the SYNC bit of the TXxSTA register configures the device for synchronous operation. Setting the CSRC bit of the TXxSTA register configures the device as a host. Clearing the SREN and CREN bits of the RCxSTA register ensures that the device is in the Transmit mode, otherwise the device will be configured to receive. Setting the SPEN bit of the RCxSTA register enables the EUSART.

33.4.1.1 Host Clock

Synchronous data transfers use a separate clock line, which is synchronous with the data. A device configured as a host transmits the clock on the TX/CK line. The TX/CK pin output driver is automatically enabled when the EUSART is configured for synchronous transmit or receive operation. Serial data bits change on the leading edge to ensure they are valid at the trailing edge of each clock. One clock cycle is generated for each data bit. Only as many clock cycles are generated as there are data bits.

33.4.1.2 Clock Polarity

A clock polarity option is provided for Microwire compatibility. Clock polarity is selected with the SCKP bit of the BAUDxCON register. Setting the SCKP bit sets the clock Idle state as high. When the SCKP bit is set, the data changes on the falling edge of each clock. Clearing the SCKP bit sets the Idle state as low. When the SCKP bit is cleared, the data changes on the rising edge of each clock.

33.4.1.3 Synchronous Host Transmission

Data is transferred out of the device on the RX/DT pin. The RX/DT and TX/CK pin output drivers are automatically enabled when the EUSART is configured for synchronous host transmit operation.

A transmission is initiated by writing a character to the TXxREG register. If the TSR still contains all or part of a previous character the new character data is held in the TXxREG until the last bit of the previous character has been transmitted. If this is the first character, or the previous character has been completely flushed from the TSR, the data in the TXxREG is immediately transferred to the TSR. The transmission of the character commences immediately following the transfer of the data to the TSR from the TXxREG.

Each data bit changes on the leading edge of the host clock and remains valid until the subsequent leading clock edge.

Note:	The TSR register is not mapped in data memory, so it is not available to the user.

33.4.1.4 Synchronous Host Transmission Setup:

1. Initialize the SPxBRGH, SPxBRGL register pair and the BRGH and BRG16 bits to achieve the desired baud rate (see **Section 33.3 “EUSART Baud Rate Generator (BRG)”**).
2. Enable the synchronous host serial port by setting bits SYNC, SPEN and CSRC.
3. Disable Receive mode by clearing bits SREN and CREN.
4. Enable Transmit mode by setting the TXEN bit.
5. If 9-bit transmission is desired, set the TX9 bit.
6. If interrupts are desired, set the TXxIE bit of the PIE3 register and the GIE and PEIE bits of the INTCON register.
7. If 9-bit transmission is selected, the ninth bit may be loaded in the TX9D bit.
8. Start transmission by loading data to the TXxREG register.

FIGURE 33-10: SYNCHRONOUS TRANSMISSION

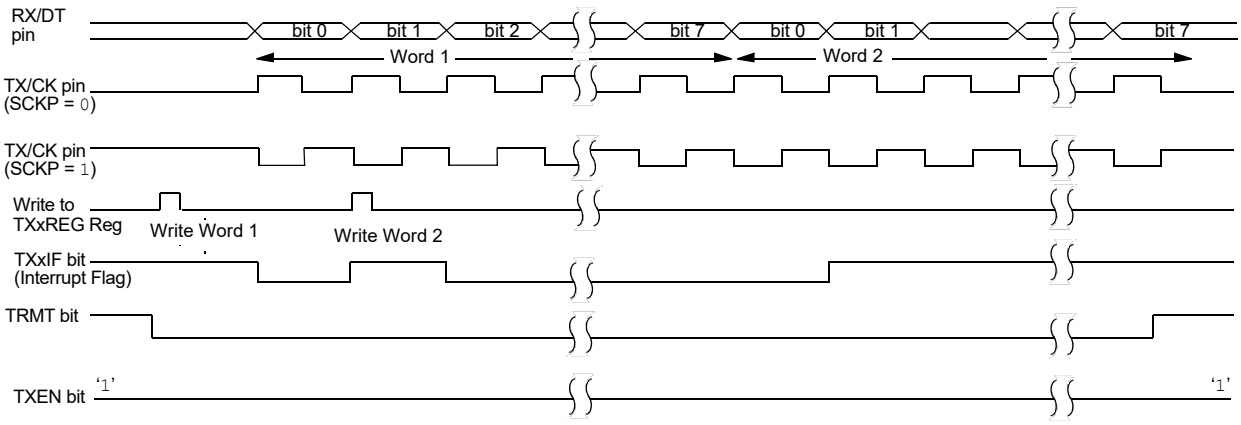

Note: Sync Host mode, SPxBRGL = 0, continuous transmission of two 8-bit words.

FIGURE 33-11: SYNCHRONOUS TRANSMISSION (THROUGH TXEN)

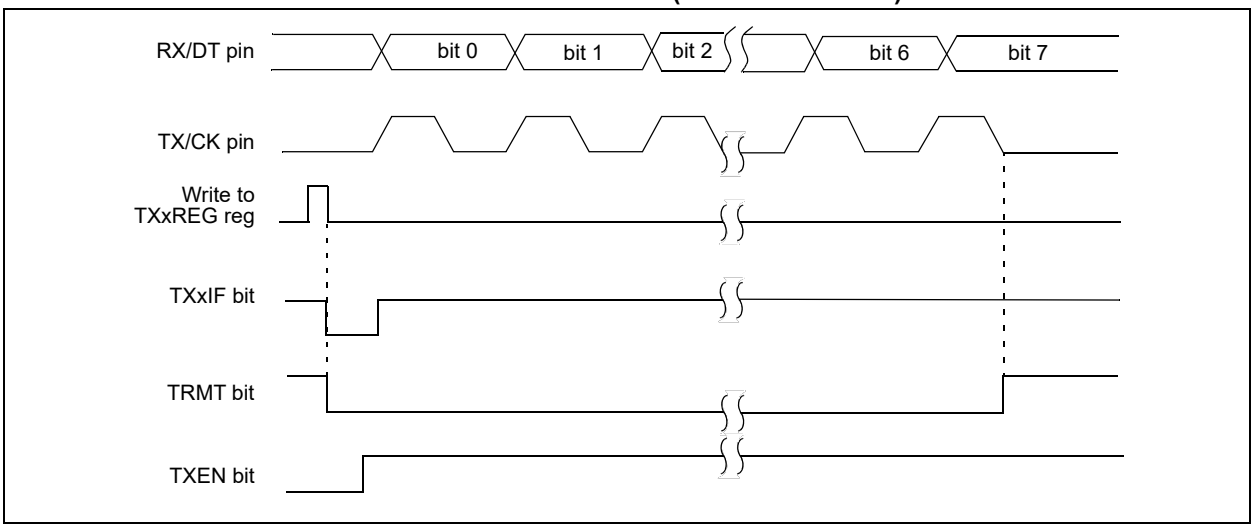

33.4.1.5 Synchronous Host Reception

Data is received at the RX/DT pin. The RX/DT pin output driver is automatically disabled when the EUSART is configured for synchronous host receive operation.

In Synchronous mode, reception is enabled by setting either the Single Receive Enable bit (SREN of the RCxSTA register) or the Continuous Receive Enable bit (CREN of the RCxSTA register).

When SREN is set and CREN is clear, only as many clock cycles are generated as there are data bits in a single character. The SREN bit is automatically cleared at the completion of one character. When CREN is set, clocks are continuously generated until CREN is cleared. If CREN is cleared in the middle of a character the CK clock stops immediately and the partial character is discarded. If SREN and CREN are both set, then SREN is cleared at the completion of the first character and CREN takes precedence.

To initiate reception, set either SREN or CREN. Data is sampled at the RX/DT pin on the trailing edge of the TX/CK clock pin and is shifted into the Receive Shift Register (RSR). When a complete character is received into the RSR, the RCxIF bit is set and the character is automatically transferred to the two character receive FIFO. The Least Significant eight bits of the top character in the receive FIFO are available in RCxREG. The RCxIF bit remains set as long as there are unread characters in the receive FIFO.

Note: If the RX/DT function is on an analog pin, the corresponding ANSEL bit must be cleared for the receiver to function.

33.4.1.6 Client Clock

Synchronous data transfers use a separate clock line, which is synchronous with the data. A device configured as a client receives the clock on the TX/CK line. The TX/CK pin output driver is automatically disabled when the device is configured for synchronous client transmit or receive operation. Serial data bits change on the leading edge to ensure they are valid at the trailing edge of each clock. One data bit is transferred for each clock cycle. Only as many clock cycles may be received as there are data bits.

Note:	If the device is configured as a client and the TX/CK function is on an analog pin, the corresponding ANSEL bit must be cleared.

33.4.1.7 Receive Overrun Error

The receive FIFO buffer can hold two characters. An overrun error will be generated if a third character, in its entirety, is received before RCxREG is read to access the FIFO. When this happens the OERR bit of the RCxSTA register is set. Previous data in the FIFO will not be overwritten. The two characters in the FIFO buffer can be read, however, no additional characters will be received until the error is cleared. The OERR bit can only be cleared by clearing the overrun condition. If the overrun error occurred when the SREN bit is set and CREN is clear then the error is cleared by reading RCxREG. If the overrun occurred when the CREN bit is set then the error condition is cleared by either clearing the CREN bit of the RCxSTA register or by clearing the SPEN bit which resets the EUSART.

33.4.1.8 Receiving 9-bit Characters

The EUSART supports 9-bit character reception. When the RX9 bit of the RCxSTA register is set the EUSART will shift nine bits into the RSR for each character received. The RX9D bit of the RCxSTA register is the ninth, and Most Significant, data bit of the top unread character in the receive FIFO. When reading 9-bit data from the receive FIFO buffer, the RX9D data bit must be read before reading the eight Least Significant bits from the RCxREG.

33.4.1.9 Synchronous Host Reception Set-up:

1. Initialize the SPxBRGH, SPxBRGL register pair for the appropriate baud rate. Set or clear the BRGH and BRG16 bits, as required, to achieve the desired baud rate.
2. Clear the ANSEL bit for the RX pin (if applicable).
3. Enable the synchronous host serial port by setting bits SYNC, SPEN and CSRC.
4. Ensure bits CREN and SREN are clear.
5. If interrupts are desired, set the RCxIE bit of the PIE3 register and the GIE and PEIE bits of the INTCON register.
6. If 9-bit reception is desired, set bit RX9.
7. Start reception by setting the SREN bit or for continuous reception, set the CREN bit.
8. Interrupt flag bit RCxIF will be set when reception of a character is complete. An interrupt will be generated if the enable bit RCxIE was set.
9. Read the RCxSTA register to get the ninth bit (if enabled) and determine if any error occurred during reception.
10. Read the 8-bit received data by reading the RCxREG register.
11. If an overrun error occurs, clear the error by either clearing the CREN bit of the RCxSTA register or by clearing the SPEN bit which resets the EUSART.

FIGURE 33-12: SYNCHRONOUS RECEPTION (HOST MODE, SREN)

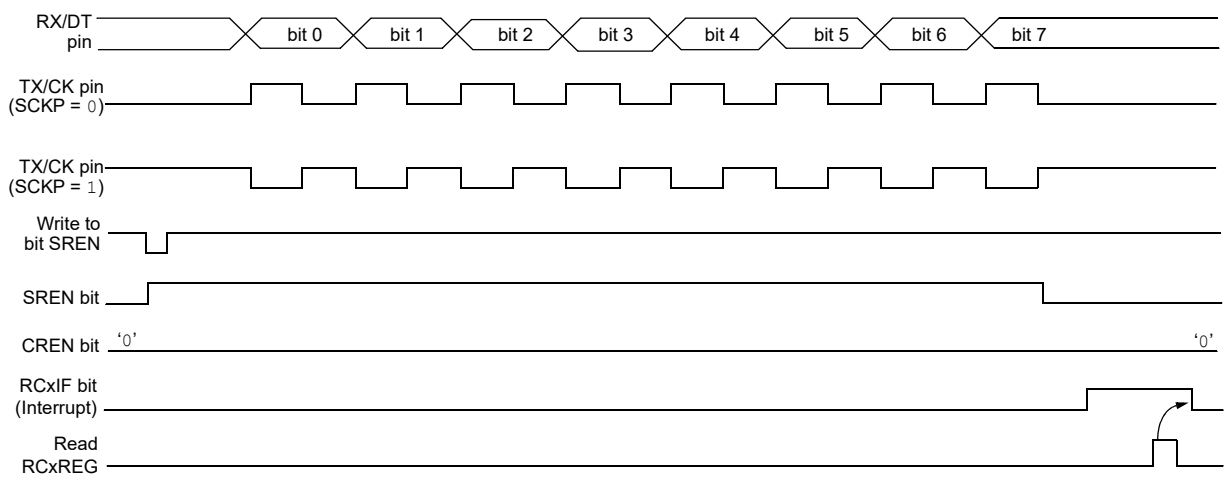

Note: Timing diagram demonstrates Sync Host mode with bit SREN = 1 and bit BRGH = 0.

33.4.2 SYNCHRONOUS CLIENT MODE

The following bits are used to configure the EUSART for synchronous client operation:

- SYNC = 1
- CSRC = 0
- SREN = 0 (for transmit); SREN = 1 (for receive)
- CREN = 0 (for transmit); CREN = 1 (for receive)
- SPEN = 1

Setting the SYNC bit of the TXxSTA register configures the device for synchronous operation. Clearing the CSRC bit of the TXxSTA register configures the device as a client. Clearing the SREN and CREN bits of the RCxSTA register ensures that the device is in the Transmit mode, otherwise the device will be configured to receive. Setting the SPEN bit of the RCxSTA register enables the EUSART.

33.4.2.1 EUSART Synchronous Client Transmit

The operation of the Synchronous Host and Client modes are identical (see **Section 33.4.1.3 "Synchronous Host Transmission"**), except in the case of the Sleep mode.

If two words are written to the TXxREG and then the SLEEP instruction is executed, the following will occur:

1. The first character will immediately transfer to the TSR register and transmit.
2. The second word will remain in the TXxREG register.
3. The TXxIF bit will not be set.
4. After the first character has been shifted out of TSR, the TXxREG register will transfer the second character to the TSR and the TXxIF bit will now be set.
5. If the PEIE and TXxIE bits are set, the interrupt will wake the device from Sleep and execute the next instruction. If the GIE bit is also set, the program will call the Interrupt Service Routine.

33.4.2.2 Synchronous Client Transmission Setup:

1. Set the SYNC and SPEN bits and clear the CSRC bit.
2. Clear the ANSEL bit for the CK pin (if applicable).
3. Clear the CREN and SREN bits.
4. If interrupts are desired, set the TXxIE bit of the PIE3 register and the GIE and PEIE bits of the INTCON register.
5. If 9-bit transmission is desired, set the TX9 bit.
6. Enable transmission by setting the TXEN bit.
7. If 9-bit transmission is selected, insert the Most Significant bit into the TX9D bit.
8. Start transmission by writing the Least Significant eight bits to the TXxREG register.

© 2017-2021 Microchip Technology Inc.

33.4.2.3 EUSART Synchronous Client Reception

The operation of the Synchronous Host and Client modes is identical (**Section 33.4.1.5 "Synchronous Host Reception"**), with the following exceptions:

- Sleep
- The CREN bit is always set, therefore the receiver is never Idle
- The SREN bit, which is a "don't care" in Client mode

A character may be received while in Sleep mode by setting the CREN bit prior to entering Sleep. Once the word is received, the RSR register will transfer the data to the RCxREG register. If the RCxIE enable bit is set, the interrupt generated will wake the device from Sleep and execute the next instruction. If the GIE bit is also set, the program will branch to the interrupt vector.

33.4.2.4 Synchronous Client Reception Setup:

1. Set the SYNC and SPEN bits and clear the CSRC bit.
2. Clear the ANSEL bit for both the CK and DT pins (if applicable).
3. If interrupts are desired, set the RCxIE bit of the PIE3 register and the GIE and PEIE bits of the INTCON register.
4. If 9-bit reception is desired, set the RX9 bit.
5. Set the CREN bit to enable reception.
6. The RCxIF bit will be set when reception is complete. An interrupt will be generated if the RCxIE bit was set.
7. If 9-bit mode is enabled, retrieve the Most Significant bit from the RX9D bit of the RCxSTA register.
8. Retrieve the eight Least Significant bits from the receive FIFO by reading the RCxREG register.
9. If an overrun error occurs, clear the error by either clearing the CREN bit of the RCxSTA register or by clearing the SPEN bit which resets the EUSART.

© 2017-2021 Microchip Technology Inc.

33.5 EUSART Operation During Sleep

The EUSART will remain active during Sleep only in the Synchronous Client mode. All other modes require the system clock and therefore cannot generate the necessary signals to run the Transmit or Receive Shift registers during Sleep.

Synchronous Client mode uses an externally generated clock to run the Transmit and Receive Shift registers.

33.5.1 SYNCHRONOUS RECEIVE DURING SLEEP

To receive during Sleep, all the following conditions must be met before entering Sleep mode:

- RCxSTA and TXxSTA Control registers must be configured for Synchronous Client Reception (see **Section 33.4.2.4 "Synchronous Client Reception Setup:"**).
- If interrupts are desired, set the RCxIE bit of the PIE3 register and the GIE and PEIE bits of the INTCON register.
- The RCxIF interrupt flag must be cleared by reading RCxREG to unload any pending characters in the receive buffer.

Upon entering Sleep mode, the device will be ready to accept data and clocks on the RX/DT and TX/CK pins, respectively. When the data word has been completely clocked in by the external device, the RCxIF interrupt flag bit of the PIR3 register will be set. Thereby, waking the processor from Sleep.

Upon waking from Sleep, the instruction following the `SLEEP` instruction will be executed. If the Global Interrupt Enable (GIE) bit of the INTCON register is also set, then the Interrupt Service Routine at address 004h will be called.

33.5.2 SYNCHRONOUS TRANSMIT DURING SLEEP

To transmit during Sleep, all the following conditions must be met before entering Sleep mode:

- The RCxSTA and TXxSTA Control registers must be configured for synchronous client transmission (see **Section 33.4.2.2 "Synchronous Client Transmission Setup:"**).
- The TXxIF interrupt flag must be cleared by writing the output data to the TXxREG, thereby filling the TSR and transmit buffer.
- If interrupts are desired, set the TXxIE bit of the PIE3 register and the PEIE bit of the INTCON register.
- Interrupt enable bits TXxIE of the PIE3 register and PEIE of the INTCON register must set.

Upon entering Sleep mode, the device will be ready to accept clocks on TX/CK pin and transmit data on the RX/DT pin. When the data word in the TSR has been completely clocked out by the external device, the pending byte in the TXxREG will transfer to the TSR and the TXxIF flag will be set. Thereby, waking the processor from Sleep. At this point, the TXxREG is available to accept another character for transmission, which will clear the TXxIF flag.

Upon waking from Sleep, the instruction following the `SLEEP` instruction will be executed. If the Global Interrupt Enable (GIE) bit is also set then the Interrupt Service Routine at address 0004h will be called.

33.6 Register Definitions: EUSART Control

REGISTER 33-1: TXxSTA: TRANSMIT STATUS AND CONTROL REGISTER

R/W-/0	R/W-0/0	R/W-0/0	R/W-0/0	R/W-0/0	R/W-0/0	R-1/1	R/W-0/0
CSRC	TX9	TXEN(1)	SYNC	SENDB	BRGH	TRMT	TX9D
bit 7							bit 0

Legend:		
R = Readable bit	W = Writable bit	U = Unimplemented bit, read as ‘0’
u = Bit is unchanged	x = Bit is unknown	-n/n = Value at POR and BOR/Value at all other Resets
‘1’ = Bit is set	‘0’ = Bit is cleared	

bit 7 **CSRC:** Clock Source Select bit
Asynchronous mode:
Unused in this mode – value ignored
Synchronous mode:
1 = Host mode (clock generated internally from BRG)
0 = Client mode (clock from external source)

bit 6 **TX9:** 9-bit Transmit Enable bit
1 = Selects 9-bit transmission
0 = Selects 8-bit transmission

bit 5 **TXEN:** Transmit Enable bit(1)
1 = Transmit enabled
0 = Transmit disabled

bit 4 **SYNC:** EUSART Mode Select bit
1 = Synchronous mode
0 = Asynchronous mode

bit 3 **SENDB:** Send Break Character bit
Asynchronous mode:
1 = Send SYNCH BREAK on next transmission – Start bit, followed by 12 ‘0’ bits, followed by Stop bit; cleared by hardware upon completion
0 = SYNCH BREAK transmission disabled or completed
Synchronous mode:
Unused in this mode – value ignored

bit 2 **BRGH:** High Baud Rate Select bit
Asynchronous mode:
1 = High speed
0 = Low speed
Synchronous mode:
Unused in this mode – value ignored

bit 1 **TRMT:** Transmit Shift Register Status bit
1 = TSR empty
0 = TSR full

bit 0 **TX9D:** Ninth bit of Transmit Data
Can be address/data bit or a parity bit.

Note 1: SREN/CREN overrides TXEN in Sync mode.

REGISTER 33-2: RCxSTA: RECEIVE STATUS AND CONTROL REGISTER

R/W-0/0	R/W-0/0	R/W-0/0	R/W-0/0	R/W-0/0	R-0/0	R-0/0	R-0/0
SPEN(1)	RX9	SREN	CREN	ADDEN	FERR	OERR	RX9D
bit 7							bit 0

Legend:		
R = Readable bit	W = Writable bit	U = Unimplemented bit, read as ‘0’
u = Bit is unchanged	x = Bit is unknown	-n/n = Value at POR and BOR/Value at all other Resets
‘1’ = Bit is set	‘0’ = Bit is cleared	

bit 7 **SPEN:** Serial Port Enable bit(1)
1 = Serial port enabled
0 = Serial port disabled (held in Reset)

bit 6 **RX9:** 9-Bit Receive Enable bit
1 = Selects 9-bit reception
0 = Selects 8-bit reception

bit 5 **SREN:** Single Receive Enable bit
Asynchronous mode:
Unused in this mode – value ignored
Synchronous mode – Host:
1 = Enables single receive
0 = Disables single receive
This bit is cleared after reception is complete.
Synchronous mode – Client
Unused in this mode – value ignored

bit 4 **CREN:** Continuous Receive Enable bit
Asynchronous mode:
1 = Enables continuous receive until enable bit CREN is cleared
0 = Disables continuous receive
Synchronous mode:
1 = Enables continuous receive until enable bit CREN is cleared (CREN overrides SREN)
0 = Disables continuous receive

bit 3 **ADDEN:** Address Detect Enable bit
Asynchronous mode 9-bit (RX9 = 1):
1 = Enables address detection – enable interrupt and load of the receive buffer when the ninth bit in the receive buffer is set
0 = Disables address detection, all bytes are received and ninth bit can be used as parity bit
Asynchronous mode 8-bit (RX9 = 0):
Unused in this mode – value ignored

bit 2 **FERR:** Framing Error bit
1 = Framing error (can be updated by reading RCxREG register and receive next valid byte)
0 = No framing error

bit 1 **OERR:** Overrun Error bit
1 = Overrun error (can be cleared by clearing bit CREN)
0 = No overrun error

bit 0 **RX9D:** Ninth bit of Received Data
This can be address/data bit or a parity bit and must be calculated by user firmware.

Note 1: The EUSART module automatically changes the pin from tri-state to drive as needed. Configure the associated TRIS bits for TX/CK and RX/DT to 1.

REGISTER 33-3: BAUDxCON: BAUD RATE CONTROL REGISTER

R/W-0/0	R-1/1	U-0	R/W-0/0	R/W-0/0	U-0	R/W-0/0	R/W-0/0
ABDOVF	RCIDL	—	SCKP	BRG16	—	WUE	ABDEN
bit 7							bit 0

Legend:		
R = Readable bit	W = Writable bit	U = Unimplemented bit, read as ‘0’
u = Bit is unchanged	x = Bit is unknown	-n/n = Value at POR and BOR/Value at all other Resets
‘1’ = Bit is set	‘0’ = Bit is cleared	

bit 7 **ABDOVF:** Auto-Baud Detect Overflow bit
Asynchronous mode:
1 = Auto-baud timer overflowed
0 = Auto-baud timer did not overflow
Synchronous mode:
Don’t care

bit 6 **RCIDL**: Receive Idle Flag bit
Asynchronous mode:
1 = Receiver is Idle
0 = Start bit has been received and the receiver is receiving
Synchronous mode:
Don’t care

bit 5 **Unimplemented:** Read as ‘0’

bit 4 **SCKP**: Clock/Transmit Polarity Select bit
Asynchronous mode:
1 = Idle state for transmit (TX) is a low level
0 = Idle state for transmit (TX) is a high level
Synchronous mode:
1 = Idle state for clock (CK) is a high level
0 = Idle state for clock (CK) is a low level

bit 3 **BRG16:** 16-bit Baud Rate Generator bit
1 = 16-bit Baud Rate Generator is used
0 = 8-bit Baud Rate Generator is used

bit 2 **Unimplemented:** Read as ‘0’

bit 1 **WUE:** Wake-up Enable bit
Asynchronous mode:
1 = USART will continue to sample the Rx pin – interrupt generated on falling edge; bit cleared in hardware on following rising edge.
0 = RX pin not monitored nor rising edge detected
Synchronous mode:
Unused in this mode – value ignored

bit 0 **ABDEN**: Auto-Baud Detect Enable bit
Asynchronous mode:
1 = Enable baud rate measurement on the next character – requires reception of a SYNCH field (55h);
cleared in hardware upon completion
0 = Baud rate measurement disabled or completed
Synchronous mode:
Unused in this mode – value ignored

REGISTER 33-4: RCxREG(1): RECEIVE DATA REGISTER

R-0	R-0	R-0	R-0	R-0	R-0	R-0	R-0
RCxREG[7:0]							
bit 7							bit 0

Legend:		
R = Readable bit	W = Writable bit	U = Unimplemented bit, read as ‘0’
u = Bit is unchanged	x = Bit is unknown	-n/n = Value at POR and BOR/Value at all other Resets
‘1’ = Bit is set	‘0’ = Bit is cleared	

bit 7-0 **RCxREG[7:0]:** Lower eight bits of the received data; read-only; see also RX9D (Register 33-2)

Note 1: RCxREG (including the 9th bit) is double buffered, and data is available while new data is being received.

REGISTER 33-5: TXxREG(1): TRANSMIT DATA REGISTER

R/W-0	R/W-0	R/W-0	R/W-0	R/W-0	R/W-0	R/W-0	R/W-0
TXxREG[7:0]							
bit 7							bit 0

Legend:		
R = Readable bit	W = Writable bit	U = Unimplemented bit, read as ‘0’
u = Bit is unchanged	x = Bit is unknown	-n/n = Value at POR and BOR/Value at all other Resets
‘1’ = Bit is set	‘0’ = Bit is cleared	

bit 7-0 **TXxREG[7:0]:** Lower eight bits of the received data; read-only; see also RX9D (Register 33-1)

Note 1: TXxREG (including the 9th bit) is double buffered, and can be written when previous data has started shifting.

REGISTER 33-6: SPxBRGL(1): BAUD RATE GENERATOR REGISTER

R/W-0	R/W-0	R/W-0	R/W-0	R/W-0	R/W-0	R/W-0	R/W-0
SPxBRG[7:0]							
bit 7							bit 0

Legend:		
R = Readable bit	W = Writable bit	U = Unimplemented bit, read as ‘0’
u = Bit is unchanged	x = Bit is unknown	-n/n = Value at POR and BOR/Value at all other Resets
‘1’ = Bit is set	‘0’ = Bit is cleared	

bit 7-0 **SPxBRG[7:0]:** Lower eight bits of the Baud Rate Generator

Note 1: Writing to SP1BRG resets the BRG counter.

REGISTER 33-7: SPxBRGH(1, 2): BAUD RATE GENERATOR HIGH REGISTER

R/W-0	R/W-0	R/W-0	R/W-0	R/W-0	R/W-0	R/W-0	R/W-0
SPxBRG[15:8]							
bit 7							bit 0

Legend:		
R = Readable bit	W = Writable bit	U = Unimplemented bit, read as ‘0’
u = Bit is unchanged	x = Bit is unknown	-n/n = Value at POR and BOR/Value at all other Resets
‘1’ = Bit is set	‘0’ = Bit is cleared	

bit 7 **SPxBRG[15:8]:** Upper eight bits of the Baud Rate Generator

Note 1: SPxBRGH value is ignored for all modes unless BAUDxCON[BRG16] is active.

2: Writing to SPxBRGH resets the BRG counter.

TABLE 33-2: SUMMARY OF REGISTERS ASSOCIATED WITH EUSART

Name	Bit 7	Bit 6	Bit 5	Bit 4	Bit 3	Bit 2	Bit 1	Bit 0	Register on Page
INTCON	GIE	PEIE	—	—	—	—	—	INTEDG	125
RCxSTA	SPEN	RX9	SREN	CREN	ADDEN	FERR	OERR	RX9D	447
TXxSTA	CSRC	TX9	TXEN	SYNC	SENDB	BRGH	TRMT	TX9D	446
BAUDxCON	ABDOVF	RCIDL	—	SCKP	BRG16	—	WUE	ABDEN	448
RCxREG	EUSART Receive Data Register								449*
TXxREG	EUSART Transmit Data Register								449*
SPxBRGL	SPxBRG[7:0]								449*
SPxBRGH	SPxBRG[15:8]								450*
RXPPS	—	—	RXPPS[5:0]						200
CKPPS	—	—	CXPPS[5:0]						200
RxyPPS	—	—	—	RxyPPS[4:0]					201
CLCxSELy	—	—	LCxDyS[5:0]						368

Legend: — = unimplemented location, read as ‘0’. Shaded cells are not used for the EUSART module.
* Page with register information.

TABLE 33-3: BAUD RATE FORMULAS

Configuration Bits			BRG/EUSART Mode	Baud Rate Formula
SYNC	BRG16	BRGH		
0	0	0	8-bit/Asynchronous	FOSC/[64 (n+1)]
0	0	1	8-bit/Asynchronous	FOSC/[16 (n+1)]
0	1	0	16-bit/Asynchronous	
0	1	1	16-bit/Asynchronous	FOSC/[4 (n+1)]
1	0	x	8-bit/Synchronous	
1	1	x	16-bit/Synchronous	

Legend: x = Don't care, n = value of SPxBRGH, SPxBRGL register pair.

TABLE 33-4: BAUD RATE FOR ASYNCHRONOUS MODES

BAUD RATE	SYNC = 0, BRGH = 0, BRG16 = 0											
	FOSC = 32.000 MHz			FOSC = 20.000 MHz			FOSC = 18.432 MHz			FOSC = 11.0592 MHz		
	Actual Rate	% Error	SPBRG value (decimal)	Actual Rate	% Error	SPBRG value (decimal)	Actual Rate	% Error	SPBRG value (decimal)	Actual Rate	% Error	SPBRG value (decimal)
300	—	—	—	—	—	—	—	—	—	—	—	—
1200	—	—	—	1221	1.73	255	1200	0.00	239	1200	0.00	143
2400	2404	0.16	207	2404	0.16	129	2400	0.00	119	2400	0.00	71
9600	9615	0.16	51	9470	-1.36	32	9600	0.00	29	9600	0.00	17
10417	10417	0.00	47	10417	0.00	29	10286	-1.26	27	10165	-2.42	16
19.2k	19.23k	0.16	25	19.53k	1.73	15	19.20k	0.00	14	19.20k	0.00	8
57.6k	55.55k	-3.55	3	—	—	—	57.60k	0.00	7	57.60k	0.00	2
115.2k	—	—	—	—	—	—	—	—	—	—	—	—

BAUD RATE	SYNC = 0, BRGH = 0, BRG16 = 0											
	FOSC = 8.000 MHz			FOSC = 4.000 MHz			FOSC = 3.6864 MHz			FOSC = 1.000 MHz		
	Actual Rate	% Error	SPBRG value (decimal)	Actual Rate	% Error	SPBRG value (decimal)	Actual Rate	% Error	SPBRG value (decimal)	Actual Rate	% Error	SPBRG value (decimal)
300	—	—	—	300	0.16	207	300	0.00	191	300	0.16	51
1200	1202	0.16	103	1202	0.16	51	1200	0.00	47	1202	0.16	12
2400	2404	0.16	51	2404	0.16	25	2400	0.00	23	—	—	—
9600	9615	0.16	12	—	—	—	9600	0.00	5	—	—	—
10417	10417	0.00	11	10417	0.00	5	—	—	—	—	—	—
19.2k	—	—	—	—	—	—	19.20k	0.00	2	—	—	—
57.6k	—	—	—	—	—	—	57.60k	0.00	0	—	—	—
115.2k	—	—	—	—	—	—	—	—	—	—	—	—

TABLE 33-4: BAUD RATE FOR ASYNCHRONOUS MODES (CONTINUED)

BAUD RATE	SYNC = 0, BRGH = 1, BRG16 = 0											
	FOSC = 32.000 MHz			FOSC = 20.000 MHz			FOSC = 18.432 MHz			FOSC = 11.0592 MHz		
	Actual Rate	% Error	SPBRG value (decimal)	Actual Rate	% Error	SPBRG value (decimal)	Actual Rate	% Error	SPBRG value (decimal)	Actual Rate	% Error	SPBRG value (decimal)
300	—	—	—	—	—	—	—	—	—	—	—	—
1200	—	—	—	—	—	—	—	—	—	—	—	—
2400	—	—	—	—	—	—	—	—	—	—	—	—
9600	9615	0.16	207	9615	0.16	129	9600	0.00	119	9600	0.00	71
10417	10417	0.00	191	10417	0.00	119	10378	-0.37	110	10473	0.53	65
19.2k	19.23k	0.16	103	19.23k	0.16	64	19.20k	0.00	59	19.20k	0.00	35
57.6k	57.14k	-0.79	34	56.82k	-1.36	21	57.60k	0.00	19	57.60k	0.00	11
115.2k	117.64k	2.12	16	113.64k	-1.36	10	115.2k	0.00	9	115.2k	0.00	5

BAUD RATE	SYNC = 0, BRGH = 1, BRG16 = 0											
	FOSC = 8.000 MHz			FOSC = 4.000 MHz			FOSC = 3.6864 MHz			FOSC = 1.000 MHz		
	Actual Rate	% Error	SPBRG value (decimal)	Actual Rate	% Error	SPBRG value (decimal)	Actual Rate	% Error	SPBRG value (decimal)	Actual Rate	% Error	SPBRG value (decimal)
300	—	—	—	—	—	—	—	—	—	300	0.16	207
1200	—	—	—	1202	0.16	207	1200	0.00	191	1202	0.16	51
2400	2404	0.16	207	2404	0.16	103	2400	0.00	95	2404	0.16	25
9600	9615	0.16	51	9615	0.16	25	9600	0.00	23	—	—	—
10417	10417	0.00	47	10417	0.00	23	10473	0.53	21	10417	0.00	5
19.2k	19231	0.16	25	19.23k	0.16	12	19.2k	0.00	11	—	—	—
57.6k	55556	-3.55	8	—	—	—	57.60k	0.00	3	—	—	—
115.2k	—	—	—	—	—	—	115.2k	0.00	1	—	—	—

BAUD RATE	SYNC = 0, BRGH = 0, BRG16 = 1											
	FOSC = 32.000 MHz			FOSC = 20.000 MHz			FOSC = 18.432 MHz			FOSC = 11.0592 MHz		
	Actual Rate	% Error	SPBRG value (decimal)	Actual Rate	% Error	SPBRG value (decimal)	Actual Rate	% Error	SPBRG value (decimal)	Actual Rate	% Error	SPBRG value (decimal)
300	300.0	0.00	6666	300.0	-0.01	4166	300.0	0.00	3839	300.0	0.00	2303
1200	1200	-0.02	3332	1200	-0.03	1041	1200	0.00	959	1200	0.00	575
2400	2401	-0.04	832	2399	-0.03	520	2400	0.00	479	2400	0.00	287
9600	9615	0.16	207	9615	0.16	129	9600	0.00	119	9600	0.00	71
10417	10417	0.00	191	10417	0.00	119	10378	-0.37	110	10473	0.53	65
19.2k	19.23k	0.16	103	19.23k	0.16	64	19.20k	0.00	59	19.20k	0.00	35
57.6k	57.14k	-0.79	34	56.818	-1.36	21	57.60k	0.00	19	57.60k	0.00	11
115.2k	117.6k	2.12	16	113.636	-1.36	10	115.2k	0.00	9	115.2k	0.00	5

TABLE 33-4: BAUD RATE FOR ASYNCHRONOUS MODES (CONTINUED)

BAUD RATE	SYNC = 0, BRGH = 0, BRG16 = 1											
	FOSC = 8.000 MHz			FOSC = 4.000 MHz			FOSC = 3.6864 MHz			FOSC = 1.000 MHz		
	Actual Rate	% Error	SPBRG value (decimal)	Actual Rate	% Error	SPBRG value (decimal)	Actual Rate	% Error	SPBRG value (decimal)	Actual Rate	% Error	SPBRG value (decimal)
300	299.9	-0.02	1666	300.1	0.04	832	300.0	0.00	767	300.5	0.16	207
1200	1199	-0.08	416	1202	0.16	207	1200	0.00	191	1202	0.16	51
2400	2404	0.16	207	2404	0.16	103	2400	0.00	95	2404	0.16	25
9600	9615	0.16	51	9615	0.16	25	9600	0.00	23	—	—	—
10417	10417	0.00	47	10417	0.00	23	10473	0.53	21	10417	0.00	5
19.2k	19.23k	0.16	25	19.23k	0.16	12	19.20k	0.00	11	—	—	—
57.6k	55556	-3.55	8	—	—	—	57.60k	0.00	3	—	—	—
115.2k	—	—	—	—	—	—	115.2k	0.00	1	—	—	—

BAUD RATE	SYNC = 0, BRGH = 1, BRG16 = 1 or SYNC = 1, BRG16 = 1											
	FOSC = 32.000 MHz			FOSC = 20.000 MHz			FOSC = 18.432 MHz			FOSC = 11.0592 MHz		
	Actual Rate	% Error	SPBRG value (decimal)	Actual Rate	% Error	SPBRG value (decimal)	Actual Rate	% Error	SPBRG value (decimal)	Actual Rate	% Error	SPBRG value (decimal)
300	300.0	0.00	26666	300.0	0.00	16665	300.0	0.00	15359	300.0	0.00	9215
1200	1200	0.00	6666	1200	-0.01	4166	1200	0.00	3839	1200	0.00	2303
2400	2400	0.01	3332	2400	0.02	2082	2400	0.00	1919	2400	0.00	1151
9600	9604	0.04	832	9597	-0.03	520	9600	0.00	479	9600	0.00	287
10417	10417	0.00	767	10417	0.00	479	10425	0.08	441	10433	0.16	264
19.2k	19.18k	-0.08	416	19.23k	0.16	259	19.20k	0.00	239	19.20k	0.00	143
57.6k	57.55k	-0.08	138	57.47k	-0.22	86	57.60k	0.00	79	57.60k	0.00	47
115.2k	115.9k	0.64	68	116.3k	0.94	42	115.2k	0.00	39	115.2k	0.00	23

BAUD RATE	SYNC = 0, BRGH = 1, BRG16 = 1 or SYNC = 1, BRG16 = 1											
	FOSC = 8.000 MHz			FOSC = 4.000 MHz			FOSC = 3.6864 MHz			FOSC = 1.000 MHz		
	Actual Rate	% Error	SPBRG value (decimal)	Actual Rate	% Error	SPBRG value (decimal)	Actual Rate	% Error	SPBRG value (decimal)	Actual Rate	% Error	SPBRG value (decimal)
300	300.0	0.00	6666	300.0	0.01	3332	300.0	0.00	3071	300.1	0.04	832
1200	1200	-0.02	1666	1200	0.04	832	1200	0.00	767	1202	0.16	207
2400	2401	0.04	832	2398	0.08	416	2400	0.00	383	2404	0.16	103
9600	9615	0.16	207	9615	0.16	103	9600	0.00	95	9615	0.16	25
10417	10417	0	191	10417	0.00	95	10473	0.53	87	10417	0.00	23
19.2k	19.23k	0.16	103	19.23k	0.16	51	19.20k	0.00	47	19.23k	0.16	12
57.6k	57.14k	-0.79	34	58.82k	2.12	16	57.60k	0.00	15	—	—	—
115.2k	117.6k	2.12	16	111.1k	-3.55	8	115.2k	0.00	7	—	—	—

34.0 REFERENCE CLOCK OUTPUT MODULE

The reference clock output module provides the ability to send a clock signal to the clock reference output pin (CLKR).

The reference clock output module has the following features:

- Selectable input clock
- Programmable clock divider
- Selectable duty cycle

34.1 CLOCK SOURCE

The reference clock output module has a selectable clock source. The CLKRCLK register (Register 34-2) controls which input is used.

34.1.1 CLOCK SYNCHRONIZATION

Once the reference clock enable (CLKREN) is set, the module is ensured to be glitch-free at start-up.

When the reference clock output is disabled, the output signal will be disabled immediately.

Clock dividers and clock duty cycles can be changed while the module is enabled, but glitches may occur on the output. To avoid possible glitches, clock dividers and clock duty cycles may be changed only when the CLKREN is clear.

34.2 PROGRAMMABLE CLOCK DIVIDER

The module takes the system clock input and divides it based on the value of the CLKRDIV[2:0] bits of the CLKRCON register (Register 34-1).

The following configurations can be made based on the CLKRDIV[2:0] bits:

- Base clock value
- Base clock value divided by 2
- Base clock value divided by 4
- Base clock value divided by 8
- Base clock value divided by 16
- Base clock value divided by 32
- Base clock value divided by 64
- Base clock value divided by 128

The clock divider values can be changed while the module is enabled; however, to prevent glitches on the output, the CLKRDIV[2:0] bits may only be changed when the module is disabled (CLKREN = 0).

34.3 SELECTABLE DUTY CYCLE

The CLKRDC[1:0] bits of the CLKRCON register can be used to modify the duty cycle of the output clock. A duty cycle of 25%, 50%, or 75% can be selected for all clock rates, with the exception of the undivided base FOSC value.

The duty cycle can be changed while the module is enabled; however, to prevent glitches on the output, the CLKRDC[1:0] bits may only be changed when the module is disabled (CLKREN = 0).

Note:	The CLKRDC1 bit is reset to '1'. This makes the default duty cycle 50% and not 0%.

34.4 OPERATION IN SLEEP MODE

The reference clock output module clock is based on the system clock. When the device goes to Sleep, the module outputs will remain in their current state. This will have a direct effect on peripherals using the reference clock output as an input signal.

FIGURE 34-1: CLOCK REFERENCE BLOCK DIAGRAM

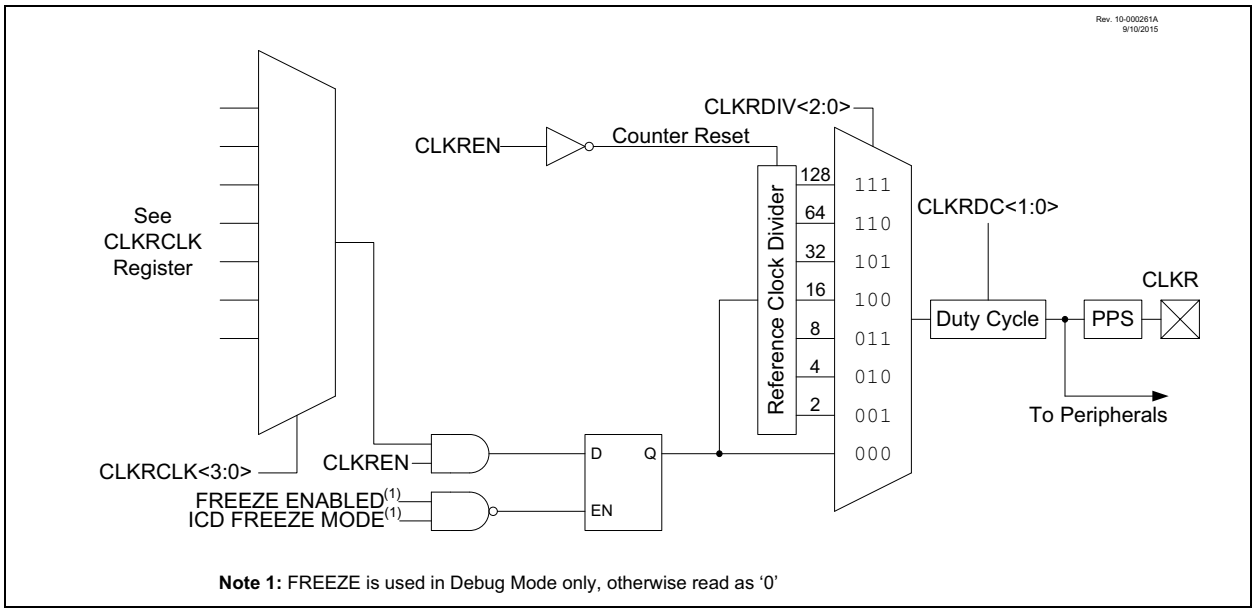

Note 1: FREEZE is used in Debug Mode only, otherwise read as ‘0’

FIGURE 34-2: CLOCK REFERENCE TIMING

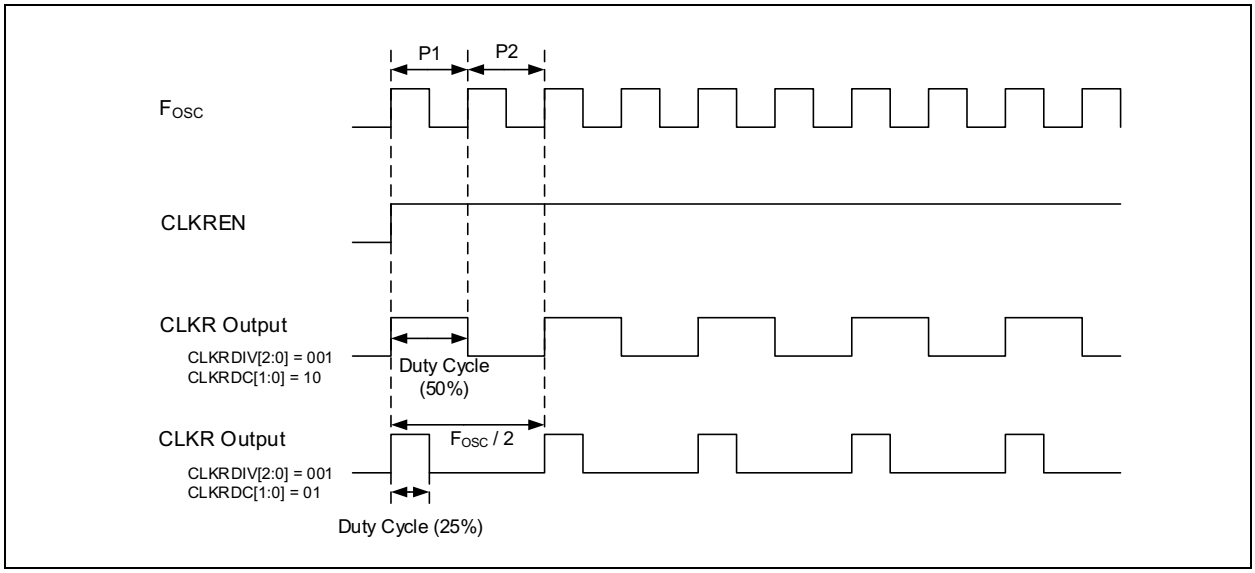

REGISTER 34-1: CLKRCON: REFERENCE CLOCK CONTROL REGISTER

R/W-0/0	U-0	U-0	R/W-0/0	R/W-0/0	R/W-0/0	R/W-0/0	R/W-0/0
CLKREN	—	—	CLKRDC[1:0]		CLKRDIV[2:0]		
bit 7							bit 0

Legend:		
R = Readable bit	W = Writable bit	U = Unimplemented bit, read as ‘0’
u = Bit is unchanged	x = Bit is unknown	-n/n = Value at POR and BOR/Value at all other Resets
‘1’ = Bit is set	‘0’ = Bit is cleared	

bit 7 **CLKREN:** Reference Clock Module Enable bit
- 1 = Reference clock module enabled
- 0 = Reference clock module is disabled

bit 6-5 **Unimplemented:** Read as ‘0’

bit 4-3 **CLKRDC[1:0]:** Reference Clock Duty Cycle bits (1)
- 11 = Clock outputs duty cycle of 75%
- 10 = Clock outputs duty cycle of 50%
- 01 = Clock outputs duty cycle of 25%
- 00 = Clock outputs duty cycle of 0%

bit 2-0 **CLKRDIV[2:0]:** Reference Clock Divider bits
- 111 = Base clock value divided by 128
- 110 = Base clock value divided by 64
- 101 = Base clock value divided by 32
- 100 = Base clock value divided by 16
- 011 = Base clock value divided by 8
- 010 = Base clock value divided by 4
- 001 = Base clock value divided by 2
- 000 = Base clock value

Note 1: Bits are valid for reference clock divider values of two or larger, the base clock cannot be further divided.

REGISTER 34-2: CLKRCLK: CLOCK REFERENCE CLOCK SELECTION REGISTER

U-0	U-0	U-0	U-0	R/W-0/0	R/W-0/0	R/W-0/0	R/W-0/0
—	—	—	—	CLKRCLK[3:0]			
bit 7							bit 0

Legend:		
R = Readable bit	W = Writable bit	U = Unimplemented bit, read as ‘0’
u = Bit is unchanged	x = Bit is unknown	-n/n = Value at POR and BOR/Value at all other Resets
‘1’ = Bit is set	‘0’ = Bit is cleared	

bit 7-4 **Unimplemented:** Read as ‘0’

bit 3-0 **CLKRCLK[3:0]:** CLKR Input bits
Clock Selection
1111 = Reserved
•
•
•
1011 = Reserved
1010 = LC4_out
1001 = LC3_out
1000 = LC2_out
0111 = LC1_out
0110 = NCO1_out
0101 = Reserved
0100 = MFINTOSC (31.25 kHz)
0011 = MFINTOSC (500 kHz)
0010 = LFINTOSC
0001 = HFINTOSC
0000 = FOSC

TABLE 34-1: SUMMARY OF REGISTERS ASSOCIATED WITH CLOCK REFERENCE OUTPUT

Name	Bit 7	Bit 6	Bit 5	Bit 4	Bit 3	Bit 2	Bit 1	Bit 0	Register on Page
CLKRCON	CLKREN	—	—	CLKRDC[1:0]		CLKRDIV[2:0]			457
CLKRCLK	—	—	—	—	CLKRCLK[3:0]				458
CLCxSELy	—	—	LCxDyS[5:0]						368
RxyPPS	—	—	—	RxyPPS[4:0]					201

Legend: — = unimplemented, read as ‘0’. Shaded cells are not used by the CLKR module.

35.0 IN-CIRCUIT SERIAL PROGRAMMING™ (ICSP™)

ICSP™ programming allows customers to manufacture circuit boards with unprogrammed devices. Programming can be done after the assembly process, allowing the device to be programmed with the most recent firmware or a custom firmware. Five pins are needed for ICSP™ programming:

- ICSPCLK
- ICSPDAT
- $\overline{\text{MCLR}}$/VPP
- VDD
- VSS

In Program/Verify mode the program memory, User IDs and the Configuration Words are programmed through serial communications. The ICSPDAT pin is a bidirectional I/O used for transferring the serial data and the ICSPCLK pin is the clock input. For more information on ICSP™ refer to the **"*PIC16(L)F153XX Memory Programming Specification*"** (DS40001838).

35.1 High-Voltage Programming Entry Mode

The device is placed into High-Voltage Programming Entry mode by holding the ICSPCLK and ICSPDAT pins low then raising the voltage on $\overline{\text{MCLR}}$/VPP to VIHH.

35.2 Low-Voltage Programming Entry Mode

The Low-Voltage Programming Entry mode allows the PIC® Flash MCUs to be programmed using VDD only, without high voltage. When the LVP bit of Configuration Words is set to '1', the low-voltage ICSP programming entry is enabled. To disable the Low-Voltage ICSP mode, the LVP bit must be programmed to '0'. The LVP bit can only be reprogrammed to '0' by using the High-Voltage Programming mode.

Entry into the Low-Voltage Programming Entry mode requires the following steps:

1. $\overline{\text{MCLR}}$ is brought to VIL.
2. A 32-bit key sequence is presented on ICSPDAT, while clocking ICSPCLK.

Once the key sequence is complete, $\overline{\text{MCLR}}$ must be held at VIL for as long as Program/Verify mode is to be maintained.

If low-voltage programming is enabled (LVP = 1), the $\overline{\text{MCLR}}$ Reset function is automatically enabled and cannot be disabled. See **Section 8.5"MCLR"** for more information.

35.3 Common Programming Interfaces

Connection to a target device is typically done through an ICSP™ header. A commonly found connector on development tools is the RJ-11 in the 6P6C (6-pin, 6-connector) configuration. See Figure 35-1.

FIGURE 35-1: ICD RJ-11 STYLE CONNECTOR INTERFACE

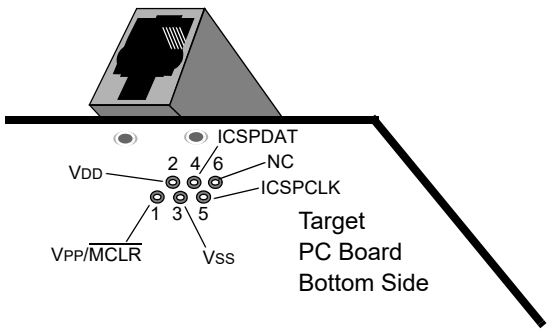

Pin Description*

1 = VPP/$\overline{\text{MCLR}}$
2 = VDD Target
3 = VSS (ground)
4 = ICSPDAT
5 = ICSPCLK
6 = No Connect

Another connector often found in use with the PICkit™ programmers is a standard 6-pin header with 0.1 inch spacing. Refer to Figure 35-2.

For additional interface recommendations, refer to the specific device programmer manual prior to PCB design.

It is recommended that isolation devices be used to separate the programming pins from other circuitry. The type of isolation is highly dependent on the specific application and may include devices such as resistors, diodes, or even jumpers. See Figure 35-3 for more information.

FIGURE 35-2: PICkit™ PROGRAMMER STYLE CONNECTOR INTERFACE

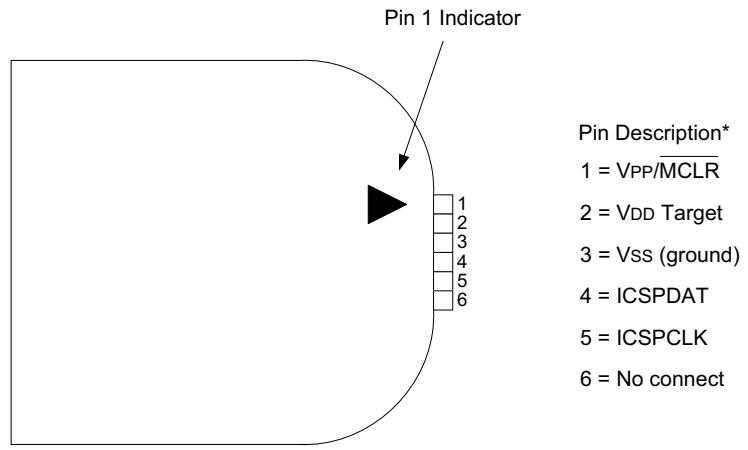

FIGURE 35-3: TYPICAL CONNECTION FOR ICSP™ PROGRAMMING

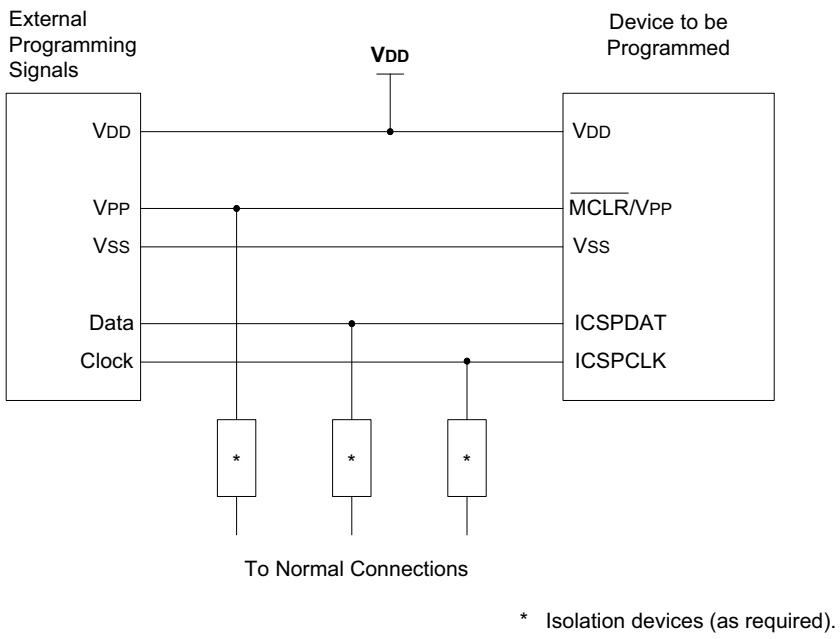

36.0 INSTRUCTION SET SUMMARY

Each instruction is a 14-bit word containing the operation code (opcode) and all required operands. The opcodes are broken into three broad categories.

- Byte Oriented
- Bit Oriented
- Literal and Control

The literal and control category contains the most varied instruction word format.

Table 36-3 lists the instructions recognized by the MPASM™ assembler.

All instructions are executed within a single instruction cycle, with the following exceptions, which may take two or three cycles:

- Subroutine entry takes two cycles (`CALL`, `CALLW`)
- Returns from interrupts or subroutines take two cycles (`RETURN`, `RETLW`, `RETFIE`)
- Program branching takes two cycles (`GOTO`, `BRA`, `BRW`, `BTFSS`, `BTFSC`, `DECFSZ`, `INCSFZ`)
- One additional instruction cycle will be used when any instruction references an indirect file register and the file select register is pointing to program memory.

One instruction cycle consists of 4 oscillator cycles; for an oscillator frequency of 4 MHz, this gives a nominal instruction execution rate of 1 MHz.

All instruction examples use the format '`0xhh`' to represent a hexadecimal number, where '`h`' signifies a hexadecimal digit.

36.1 Read-Modify-Write Operations

Any instruction that specifies a file register as part of the instruction performs a Read-Modify-Write (R-M-W) operation. The register is read, the data is modified, and the result is stored according to either the instruction, or the destination designator 'd'. A read operation is performed on a register even if the instruction writes to that register.

TABLE 36-1: OPCODE FIELD DESCRIPTIONS

Field	Description
f	Register file address (0x00 to 0x7F)
W	Working register (accumulator)
b	Bit address within an 8-bit file register
k	Literal field, constant data or label
x	Don't care location (= `0` or `1`). The assembler will generate code with x = `0`. It is the recommended form of use for compatibility with all Microchip software tools.
d	Destination select; d = `0`: store result in W, d = `1`: store result in file register f. Default is d = `1`.
n	FSR or INDF number. (0-1)
mm	Prepost increment-decrement mode selection

TABLE 36-2: ABBREVIATION DESCRIPTIONS

Field	Description
PC	Program Counter
$\overline{TO}$	Time-Out bit
C	Carry bit
DC	Digit Carry bit
Z	Zero bit
$\overline{PD}$	Power-Down bit

36.2 General Format for Instructions

TABLE 36-3: INSTRUCTION SET

Mnemonic, Operands		Description	Cycles	14-Bit Opcode MSb			LSb	Status Affected	Notes
BYTE-ORIENTED FILE REGISTER OPERATIONS									
ADDWF	f, d	Add W and f	1	00	0111	dfff	ffff	C, DC, Z	2
ADDWFC	f, d	Add with Carry W and f	1	11	1101	dfff	ffff	C, DC, Z	2
ANDWF	f, d	AND W with f	1	00	0101	dfff	ffff	Z	2
ASRF	f, d	Arithmetic Right Shift	1	11	0111	dfff	ffff	C, Z	2
LSLF	f, d	Logical Left Shift	1	11	0101	dfff	ffff	C, Z	2
LSRF	f, d	Logical Right Shift	1	11	0110	dfff	ffff	C, Z	2
CLRF	f	Clear f	1	00	0001	1fff	ffff	Z	2
CLRW	–	Clear W	1	00	0001	0000	00xx	Z	
COMF	f, d	Complement f	1	00	1001	dfff	ffff	Z	2
DECF	f, d	Decrement f	1	00	0011	dfff	ffff	Z	2
INCF	f, d	Increment f	1	00	1010	dfff	ffff	Z	2
IORWF	f, d	Inclusive OR W with f	1	00	0100	dfff	ffff	Z	2
MOVF	f, d	Move f	1	00	1000	dfff	ffff	Z	2
MOVWF	f	Move W to f	1	00	0000	1fff	ffff		2
RLF	f, d	Rotate Left f through Carry	1	00	1101	dfff	ffff	C	2
RRF	f, d	Rotate Right f through Carry	1	00	1100	dfff	ffff	C	2
SUBWF	f, d	Subtract W from f	1	00	0010	dfff	ffff	C, DC, Z	2
SUBWFB	f, d	Subtract with Borrow W from f	1	11	1011	dfff	ffff	C, DC, Z	2
SWAPF	f, d	Swap nibbles in f	1	00	1110	dfff	ffff		2
XORWF	f, d	Exclusive OR W with f	1	00	0110	dfff	ffff	Z	2
BYTE ORIENTED SKIP OPERATIONS									
DECFSZ	f, d	Decrement f, Skip if 0	1(2)	00	1011	dfff	ffff		1, 2
INCFSZ	f, d	Increment f, Skip if 0	1(2)	00	1111	dfff	ffff		1, 2
BIT-ORIENTED FILE REGISTER OPERATIONS									
BCF	f, b	Bit Clear f	1	01	00bb	bfff	ffff		2
BSF	f, b	Bit Set f	1	01	01bb	bfff	ffff		2
BIT-ORIENTED SKIP OPERATIONS									
BTFSC	f, b	Bit Test f, Skip if Clear	1 (2)	01	10bb	bfff	ffff		1, 2
BTFSS	f, b	Bit Test f, Skip if Set	1 (2)	01	11bb	bfff	ffff		1, 2
LITERAL OPERATIONS									
ADDLW	k	Add literal and W	1	11	1110	kkkk	kkkk	C, DC, Z	
ANDLW	k	AND literal with W	1	11	1001	kkkk	kkkk	Z	
IORLW	k	Inclusive OR literal with W	1	11	1000	kkkk	kkkk	Z	
MOVLB	k	Move literal to BSR	1	00	0001	01kk	kkkk		
MOVLP	k	Move literal to PCLATH	1	11	0001	1kkk	kkkk		
MOVLW	k	Move literal to W	1	11	0000	kkkk	kkkk		
SUBLW	k	Subtract W from literal	1	11	1100	kkkk	kkkk	C, DC, Z	
XORLW	k	Exclusive OR literal with W	1	11	1010	kkkk	kkkk	Z	

Note 1: If the Program Counter (PC) is modified, or a conditional test is true, the instruction requires two cycles. The second cycle is executed as a `NOP`.

2: If this instruction addresses an INDF register and the MSb of the corresponding FSR is set, this instruction will require one additional instruction cycle.

TABLE 36-3: INSTRUCTION SET (CONTINUED)

Mnemonic, Operands		Description	Cycles	14-Bit Opcode MSb			LSb	Status Affected	Notes
CONTROL OPERATIONS									
BRA	k	Relative Branch	2	11	001k	kkkk	kkkk		
BRW	–	Relative Branch with W	2	00	0000	0000	1011		
CALL	k	Call Subroutine	2	10	0kkk	kkkk	kkkk		
CALLW	–	Call Subroutine with W	2	00	0000	0000	1010		
GOTO	k	Go to address	2	10	1kkk	kkkk	kkkk		
RETFIE	k	Return from interrupt	2	00	0000	0000	1001		
RETLW	k	Return with literal in W	2	11	0100	kkkk	kkkk		
RETURN	–	Return from Subroutine	2	00	0000	0000	1000		
INHERENT OPERATIONS									
CLRWDT	–	Clear Watchdog Timer	1	00	0000	0110	0100	$\overline{TO}$, $\overline{PD}$	
NOP	–	No Operation	1	00	0000	0000	0000		
RESET	–	Software device Reset	1	00	0000	0000	0001		
SLEEP	–	Go into Standby or Idle mode	1	00	0000	0110	0011	$\overline{TO}$, $\overline{PD}$	
TRIS	f	Load TRIS register with W	1	00	0000	0110	0fff		
C-COMPILER OPTIMIZED									
ADDFSR	n, k	Add Literal k to FSRn	1	11	0001	0nkk	kkkk		
MOVIW	n mm	Move Indirect FSRn to W with pre/post inc/dec modifier, mm	1	00	0000	0001	0nmm	Z	**2, 3**
	k[n]	Move INDFn to W, Indexed Indirect.	1	11	1111	0nkk	kkkk	Z	**2**
MOVWI	n mm	Move W to Indirect FSRn with pre/post inc/dec modifier, mm	1	00	0000	0001	1nmm		**2, 3**
	k[n]	Move W to INDFn, Indexed Indirect.	1	11	1111	1nkk	kkkk		**2**

Note 1: If the Program Counter (PC) is modified, or a conditional test is true, the instruction requires two cycles. The second cycle is executed as a `NOP`.

2: If this instruction addresses an INDF register and the MSb of the corresponding FSR is set, this instruction will require one additional instruction cycle.

3: See Table in the MOVIW and MOVWI instruction descriptions.

36.3 Instruction Descriptions

ADDFSR — Add Literal to FSRn

Syntax:	[*label*] ADDFSR FSRn, k
Operands:	$-32 \le k \le 31$ $n \in [0, 1]$
Operation:	FSR(n) + k → FSR(n)
Status Affected:	None
Description:	The signed 6-bit literal ‘k’ is added to the contents of the FSRnH:FSRnL register pair. FSRn is limited to the range 0000h-FFFFh. Moving beyond these bounds will cause the FSR to wrap-around.

ADDLW — Add literal and W

Syntax:	[*label*] ADDLW k
Operands:	$0 \le k \le 255$
Operation:	(W) + k → (W)
Status Affected:	C, DC, Z
Description:	The contents of the W register are added to the 8-bit literal ‘k’ and the result is placed in the W register.

ADDWF — Add W and f

Syntax:	[*label*] ADDWF f,d
Operands:	$0 \le f \le 127$ $d \in [0,1]$
Operation:	(W) + (f) → (destination)
Status Affected:	C, DC, Z
Description:	Add the contents of the W register with register ‘f’. If ‘d’ is ‘0’, the result is stored in the W register. If ‘d’ is ‘1’, the result is stored back in register ‘f’.

ADDWFC — ADD W and CARRY bit to f

Syntax:	[*label*] ADDWFC f {,d}
Operands:	$0 \le f \le 127$ $d \in [0,1]$
Operation:	(W) + (f) + (C) → dest
Status Affected:	C, DC, Z
Description:	Add W, the Carry flag and data memory location ‘f’. If ‘d’ is ‘0’, the result is placed in W. If ‘d’ is ‘1’, the result is placed in data memory location ‘f’.

ANDLW — AND literal with W

Syntax:	[*label*] ANDLW k
Operands:	$0 \le k \le 255$
Operation:	(W) .AND. (k) → (W)
Status Affected:	Z
Description:	The contents of W register are AND’ed with the 8-bit literal ‘k’. The result is placed in the W register.

ANDWF — AND W with f

Syntax:	[*label*] ANDWF f,d
Operands:	$0 \le f \le 127$ $d \in [0,1]$
Operation:	(W) .AND. (f) → (destination)
Status Affected:	Z
Description:	AND the W register with register ‘f’. If ‘d’ is ‘0’, the result is stored in the W register. If ‘d’ is ‘1’, the result is stored back in register ‘f’.

ASRF — Arithmetic Right Shift

Syntax:	[*label*] ASRF f {,d}
Operands:	$0 \le f \le 127$ $d \in [0,1]$
Operation:	(f<7>)→ dest<7> (f<7:1>) → dest<6:0>, (f<0>) → C,
Status Affected:	C, Z
Description:	The contents of register ‘f’ are shifted one bit to the right through the Carry flag. The MSb remains unchanged. If ‘d’ is ‘0’, the result is placed in W. If ‘d’ is ‘1’, the result is stored back in register ‘f’.

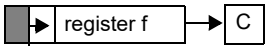

BCF	Bit Clear f
Syntax:	[*label*] BCF f,b
Operands:	0 ≤ f ≤ 127 0 ≤ b ≤ 7
Operation:	0 → (f<b>)
Status Affected:	None
Description:	Bit ‘b’ in register ‘f’ is cleared.

BRA	Relative Branch
Syntax:	[*label*] BRA label [*label*] BRA $+k
Operands:	-256 ≤ label - PC + 1 ≤ 255 -256 ≤ k ≤ 255
Operation:	(PC) + 1 + k → PC
Status Affected:	None
Description:	Add the signed 9-bit literal ‘k’ to the PC. Since the PC will have incremented to fetch the next instruction, the new address will be PC + 1 + k. This instruction is a two-cycle instruction. This branch has a limited range.

BRW	Relative Branch with W
Syntax:	[*label*] BRW
Operands:	None
Operation:	(PC) + (W) → PC
Status Affected:	None
Description:	Add the contents of W (unsigned) to the PC. Since the PC will have incremented to fetch the next instruction, the new address will be PC + 1 + (W). This instruction is a two-cycle instruction.

BSF	Bit Set f
Syntax:	[*label*] BSF f,b
Operands:	0 ≤ f ≤ 127 0 ≤ b ≤ 7
Operation:	1 → (f<b>)
Status Affected:	None
Description:	Bit ‘b’ in register ‘f’ is set.

BTFSC	Bit Test f, Skip if Clear
Syntax:	[*label*] BTFSC f,b
Operands:	0 ≤ f ≤ 127 0 ≤ b ≤ 7
Operation:	skip if (f<b>) = 0
Status Affected:	None
Description:	If bit ‘b’ in register ‘f’ is ‘1’, the next instruction is executed. If bit ‘b’, in register ‘f’, is ‘0’, the next instruction is discarded, and a NOP is executed instead, making this a two-cycle instruction.

BTFSS	Bit Test f, Skip if Set
Syntax:	[*label*] BTFSS f,b
Operands:	0 ≤ f ≤ 127 0 ≤ b < 7
Operation:	skip if (f<b>) = 1
Status Affected:	None
Description:	If bit ‘b’ in register ‘f’ is ‘0’, the next instruction is executed. If bit ‘b’ is ‘1’, then the next instruction is discarded and a NOP is executed instead, making this a two-cycle instruction.

CALL — Call Subroutine

Syntax:	[*label*] CALL k
Operands:	$0 \le k \le 2047$
Operation:	(PC)+ 1→ TOS, k → PC<10:0>, (PCLATH<6:3>) → PC<14:11>
Status Affected:	None
Description:	Call Subroutine. First, return address (PC + 1) is pushed onto the stack. The 11-bit immediate address is loaded into PC bits <10:0>. The upper bits of the PC are loaded from PCLATH. `CALL` is a two-cycle instruction.

CALLW — Subroutine Call With W

Syntax:	[*label*] CALLW
Operands:	None
Operation:	(PC) +1 → TOS, (W) → PC<7:0>, (PCLATH<6:0>) → PC<14:8>
Status Affected:	None
Description:	Subroutine call with W. First, the return address (PC + 1) is pushed onto the return stack. Then, the contents of W is loaded into PC<7:0>, and the contents of PCLATH into PC<14:8>. `CALLW` is a two-cycle instruction.

CLRF — Clear f

Syntax:	[*label*] CLRF f
Operands:	$0 \le f \le 127$
Operation:	00h → (f) `1` → Z
Status Affected:	Z
Description:	The contents of register ‘f’ are cleared and the Z bit is set.

CLRW — Clear W

Syntax:	[*label*] CLRW
Operands:	None
Operation:	00h → (W) `1` → Z
Status Affected:	Z
Description:	W register is cleared. Zero (Z) bit is set.

CLRWDT — Clear Watchdog Timer

Syntax:	[*label*] CLRWDT
Operands:	None
Operation:	00h → WDT `0` → WDT prescaler, `1` → $\overline{TO}$ `1` → $\overline{PD}$
Status Affected:	$\overline{TO}$, $\overline{PD}$
Description:	`CLRWDT` instruction resets the Watchdog Timer. It also resets the prescaler of the WDT. Status bits $\overline{TO}$ and $\overline{PD}$ are set.

COMF — Complement f

Syntax:	[*label*] COMF f,d
Operands:	$0 \le f \le 127$ d ∈ [`0`,`1`]
Operation:	($\bar{f}$) → (destination)
Status Affected:	Z
Description:	The contents of register ‘f’ are complemented. If ‘d’ is ‘`0`’, the result is stored in W. If ‘d’ is ‘`1`’, the result is stored back in register ‘f’.

DECF — Decrement f

Syntax:	[*label*] DECF f,d
Operands:	$0 \le f \le 127$ d ∈ [`0`,`1`]
Operation:	(f) - 1 → (destination)
Status Affected:	Z
Description:	Decrement register ‘f’. If ‘d’ is ‘`0`’, the result is stored in the W register. If ‘d’ is ‘`1`’, the result is stored back in register ‘f’.

DECFSZ	Decrement f, Skip if 0
Syntax:	[*label*] DECFSZ f,d
Operands:	$0 \le f \le 127$ $d \in [0,1]$
Operation:	(f) - 1 → (destination); skip if result = 0
Status Affected:	None
Description:	The contents of register 'f' are decremented. If 'd' is '0', the result is placed in the W register. If 'd' is '1', the result is placed back in register 'f'. If the result is '1', the next instruction is executed. If the result is '0', then a NOP is executed instead, making it a two-cycle instruction.

GOTO	Unconditional Branch
Syntax:	[*label*] GOTO k
Operands:	$0 \le k \le 2047$
Operation:	k → PC<10:0> PCLATH<6:3> → PC<14:11>
Status Affected:	None
Description:	GOTO is an unconditional branch. The 11-bit immediate value is loaded into PC bits <10:0>. The upper bits of PC are loaded from PCLATH<4:3>. GOTO is a two-cycle instruction.

INCF	Increment f
Syntax:	[*label*] INCF f,d
Operands:	$0 \le f \le 127$ $d \in [0,1]$
Operation:	(f) + 1 → (destination)
Status Affected:	Z
Description:	The contents of register 'f' are incremented. If 'd' is '0', the result is placed in the W register. If 'd' is '1', the result is placed back in register 'f'.

INCFSZ	Increment f, Skip if 0
Syntax:	[*label*] INCFSZ f,d
Operands:	$0 \le f \le 127$ $d \in [0,1]$
Operation:	(f) + 1 → (destination), skip if result = 0
Status Affected:	None
Description:	The contents of register 'f' are incremented. If 'd' is '0', the result is placed in the W register. If 'd' is '1', the result is placed back in register 'f'. If the result is '1', the next instruction is executed. If the result is '0', a NOP is executed instead, making it a two-cycle instruction.

IORLW	Inclusive OR literal with W
Syntax:	[*label*] IORLW k
Operands:	$0 \le k \le 255$
Operation:	(W) .OR. k → (W)
Status Affected:	Z
Description:	The contents of the W register are ORed with the 8-bit literal 'k'. The result is placed in the W register.

IORWF	Inclusive OR W with f
Syntax:	[*label*] IORWF f,d
Operands:	$0 \le f \le 127$ $d \in [0,1]$
Operation:	(W) .OR. (f) → (destination)
Status Affected:	Z
Description:	Inclusive OR the W register with register 'f'. If 'd' is '0', the result is placed in the W register. If 'd' is '1', the result is placed back in register 'f'.

LSLF — Logical Left Shift

Syntax:	[*label*] LSLF f {,d}
Operands:	$0 \le f \le 127$ $d \in [0,1]$
Operation:	(f<7>) → C (f<6:0>) → dest<7:1> 0 → dest<0>
Status Affected:	C, Z
Description:	The contents of register ‘f’ are shifted one bit to the left through the Carry flag. A ‘0’ is shifted into the LSb. If ‘d’ is ‘0’, the result is placed in W. If ‘d’ is ‘1’, the result is stored back in register ‘f’.

LSRF — Logical Right Shift

Syntax:	[*label*] LSRF f {,d}
Operands:	$0 \le f \le 127$ $d \in [0,1]$
Operation:	0 → dest<7> (f<7:1>) → dest<6:0>, (f<0>) → C,
Status Affected:	C, Z
Description:	The contents of register ‘f’ are shifted one bit to the right through the Carry flag. A ‘0’ is shifted into the MSb. If ‘d’ is ‘0’, the result is placed in W. If ‘d’ is ‘1’, the result is stored back in register ‘f’.

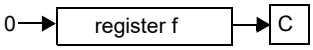

MOVF — Move f

Syntax:	[*label*] MOVF f,d
Operands:	$0 \le f \le 127$ $d \in [0,1]$
Operation:	(f) → (dest)
Status Affected:	Z
Description:	The contents of register f is moved to a destination dependent upon the status of d. If d = 0, destination is W register. If d = 1, the destination is file register f itself. d = 1 is useful to test a file register since status flag Z is affected.
Words:	1
Cycles:	1
Example:	`MOVF FSR, 0` After Instruction W = value in FSR register Z = 1

MOVIW — Move INDFn to W

Syntax: [*label*] MOVIW ++FSRn
[*label*] MOVIW --FSRn
[*label*] MOVIW FSRn++
[*label*] MOVIW FSRn--
[*label*] MOVIW k[FSRn]

Operands: n ∈ [0,1]
mm ∈ [00,01, 10, 11]
-32 ≤ k ≤ 31

Operation: INDFn → W
Effective address is determined by
- FSR + 1 (preincrement)
- FSR - 1 (predecrement)
- FSR + k (relative offset)

After the Move, the FSR value will be either:
- FSR + 1 (all increments)
- FSR - 1 (all decrements)
- Unchanged

Status Affected: Z

Mode	Syntax	mm
Preincrement	++FSRn	00
Predecrement	--FSRn	01
Postincrement	FSRn++	10
Postdecrement	FSRn--	11

Description: This instruction is used to move data between W and one of the indirect registers (INDFn). Before/after this move, the pointer (FSRn) is updated by pre/post incrementing/decrementing it.

Note: The INDFn registers are not physical registers. Any instruction that accesses an INDFn register actually accesses the register at the address specified by the FSRn.

FSRn is limited to the range 0000h - FFFFh. Incrementing/decrementing it beyond these bounds will cause it to wrap-around.

MOVLB — Move literal to BSR

Syntax: [*label*] MOVLB k

Operands: 0 ≤ k ≤ 63

Operation: k → BSR

Status Affected: None

Description: The 6-bit literal ‘k’ is loaded into the Bank Select Register (BSR).

MOVLP — Move literal to PCLATH

Syntax: [*label*] MOVLP k

Operands: 0 ≤ k ≤ 127

Operation: k → PCLATH

Status Affected: None

Description: The 7-bit literal ‘k’ is loaded into the PCLATH register.

MOVLW — Move literal to W

Syntax: [*label*] MOVLW k

Operands: 0 ≤ k ≤ 255

Operation: k → (W)

Status Affected: None

Description: The 8-bit literal ‘k’ is loaded into W register. The “don’t cares” will assemble as ‘0’s.

Words: 1

Cycles: 1

Example:
```
MOVLW    0x5A
```
After Instruction
W = 0x5A

MOVWF — Move W to f

Syntax: [*label*] MOVWF f

Operands: 0 ≤ f ≤ 127

Operation: (W) → (f)

Status Affected: None

Description: Move data from W register to register ‘f’.

Words: 1

Cycles: 1

Example:
```
MOVWF   LATA
```
Before Instruction
LATA = 0xFF
W = 0x4F
After Instruction
LATA = 0x4F
W = 0x4F

MOVWI — Move W to INDFn

Syntax: [*label*] MOVWI ++FSRn
[*label*] MOVWI --FSRn
[*label*] MOVWI FSRn++
[*label*] MOVWI FSRn--
[*label*] MOVWI k[FSRn]

Operands: n ∈ [0,1]
mm ∈ [00,01, 10, 11]
-32 ≤ k ≤ 31

Operation: W → INDFn
Effective address is determined by
- FSR + 1 (preincrement)
- FSR - 1 (predecrement)
- FSR + k (relative offset)

After the Move, the FSR value will be either:
- FSR + 1 (all increments)
- FSR - 1 (all decrements)

Unchanged

Status Affected: None

Mode	Syntax	mm
Preincrement	++FSRn	00
Predecrement	--FSRn	01
Postincrement	FSRn++	10
Postdecrement	FSRn--	11

Description: This instruction is used to move data between W and one of the indirect registers (INDFn). Before/after this move, the pointer (FSRn) is updated by pre/post incrementing/decrementing it.

Note: The INDFn registers are not physical registers. Any instruction that accesses an INDFn register actually accesses the register at the address specified by the FSRn.

FSRn is limited to the range 0000h-FFFFh. Incrementing/decrementing it beyond these bounds will cause it to wrap-around.

The increment/decrement operation on FSRn WILL NOT affect any Status bits.

NOP — No Operation

Syntax: [*label*] NOP

Operands: None

Operation: No operation

Status Affected: None

Description: No operation.

Words: 1

Cycles: 1

Example:

```
NOP
```

RESET — Software Reset

Syntax: [*label*] RESET

Operands: None

Operation: Execute a device Reset. Resets the $\overline{RI}$ flag of the PCON register.

Status Affected: None

Description: This instruction provides a way to execute a hardware Reset by software.

RETFIE — Return from Interrupt

Syntax: [*label*] RETFIE k

Operands: None

Operation: TOS → PC,
1 → GIE

Status Affected: None

Description: Return from Interrupt. Stack is POPed and Top-of-Stack (TOS) is loaded in the PC. Interrupts are enabled by setting Global Interrupt Enable (GIE) bit (INTCON<7>). This is a two-cycle instruction.

Words: 1

Cycles: 2

Example:

```
RETFIE
```

After Interrupt
PC = TOS
GIE = 1

RETLW — Return with literal in W

Syntax:	[*label*] RETLW k
Operands:	$0 \le k \le 255$
Operation:	$k \rightarrow (W)$; $TOS \rightarrow PC$
Status Affected:	None
Description:	The W register is loaded with the 8-bit literal ‘k’. The program counter is loaded from the top of the stack (the return address). This is a two-cycle instruction.
Words:	1
Cycles:	2

Example:

```
  CALL TABLE;W contains table
      ;offset value
  •   ;W now has table value
TABLE •
  •
  ADDWF PC  ;W = offset
  RETLW k1  ;Begin table
  RETLW k2  ;
  •
  •
  •
  RETLW kn  ; End of table
```

Before Instruction
W = 0x07
After Instruction
W = value of k8

RETURN — Return from Subroutine

Syntax:	[*label*] RETURN
Operands:	None
Operation:	$TOS \rightarrow PC$
Status Affected:	None
Description:	Return from subroutine. The stack is POPed and the top of the stack (TOS) is loaded into the program counter. This is a two-cycle instruction.

RLF — Rotate Left f through Carry

Syntax:	[*label*] RLF f,d
Operands:	$0 \le f \le 127$ $d \in [0,1]$
Operation:	See description below
Status Affected:	C
Description:	The contents of register ‘f’ are rotated one bit to the left through the Carry flag. If ‘d’ is ‘0’, the result is placed in the W register. If ‘d’ is ‘1’, the result is stored back in register ‘f’.

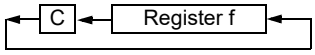

Words:	1
Cycles:	1

Example:

```
RLF     REG1,0
```

Before Instruction
REG1 = 1110 0110
C = 0
After Instruction
REG1 = 1110 0110
W = 1100 1100
C = 1

RRF — Rotate Right f through Carry

Syntax:	[*label*] RRF f,d
Operands:	$0 \le f \le 127$ $d \in [0,1]$
Operation:	See description below
Status Affected:	C
Description:	The contents of register ‘f’ are rotated one bit to the right through the Carry flag. If ‘d’ is ‘0’, the result is placed in the W register. If ‘d’ is ‘1’, the result is placed back in register ‘f’.

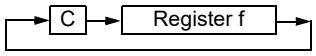

SLEEP — Enter Sleep mode

Syntax:	[*label*] SLEEP
Operands:	None
Operation:	00h → WDT, 0 → WDT prescaler, 1 → $\overline{TO}$, 0 → $\overline{PD}$
Status Affected:	$\overline{TO}$, $\overline{PD}$
Description:	The power-down Status bit, $\overline{PD}$ is cleared. Time-out Status bit, $\overline{TO}$ is set. Watchdog Timer and its prescaler are cleared. See **Section 11.2 "Sleep Mode"** for more information.

SUBLW — Subtract W from literal

Syntax:	[*label*] SUBLW k
Operands:	0 ≤ k ≤ 255
Operation:	k - (W) → (W)
Status Affected:	C, DC, Z
Description:	The W register is subtracted (2's complement method) from the 8-bit literal 'k'. The result is placed in the W register.

C = 0	W > k
C = 1	W ≤ k
DC = 0	W<3:0> > k<3:0>
DC = 1	W<3:0> ≤ k<3:0>

SUBWF — Subtract W from f

Syntax:	[*label*] SUBWF f,d
Operands:	0 ≤ f ≤ 127 d ∈ [0,1]
Operation:	(f) - (W) → (destination)
Status Affected:	C, DC, Z
Description:	Subtract (2's complement method) W register from register 'f'. If 'd' is '0', the result is stored in the W register. If 'd' is '1', the result is stored back in register 'f.

C = 0	W > f
C = 1	W ≤ f
DC = 0	W<3:0> > f<3:0>
DC = 1	W<3:0> ≤ f<3:0>

SUBWFB — Subtract W from f with Borrow

Syntax:	SUBWFB f {,d}
Operands:	0 ≤ f ≤ 127 d ∈ [0,1]
Operation:	(f) – (W) – ($\overline{B}$) → dest
Status Affected:	C, DC, Z
Description:	Subtract W and the BORROW flag (CARRY) from register 'f' (2's complement method). If 'd' is '0', the result is stored in W. If 'd' is '1', the result is stored back in register 'f'.

SWAPF — Swap Nibbles in f

Syntax:	[*label*] SWAPF f,d
Operands:	0 ≤ f ≤ 127 d ∈ [0,1]
Operation:	(f<3:0>) → (destination<7:4>), (f<7:4>) → (destination<3:0>)
Status Affected:	None
Description:	The upper and lower nibbles of register 'f' are exchanged. If 'd' is '0', the result is placed in the W register. If 'd' is '1', the result is placed in register 'f'.

TRIS	Load TRIS Register with W
Syntax:	[*label*] TRIS f
Operands:	$5 \le f \le 7$
Operation:	(W) → TRIS register ‘f’
Status Affected:	None
Description:	Move data from W register to TRIS register. When ‘f’ = 5, TRISA is loaded. When ‘f’ = 6, TRISB is loaded. When ‘f’ = 7, TRISC is loaded.

XORLW	Exclusive OR literal with W
Syntax:	[*label*] XORLW k
Operands:	$0 \le k \le 255$
Operation:	(W) .XOR. k → (W)
Status Affected:	Z
Description:	The contents of the W register are XORed with the 8-bit literal ‘k’. The result is placed in the W register.

XORWF	Exclusive OR W with f
Syntax:	[*label*] XORWF f,d
Operands:	$0 \le f \le 127$ $d \in [0,1]$
Operation:	(W) .XOR. (f) → (destination)
Status Affected:	Z
Description:	Exclusive OR the contents of the W register with register ‘f’. If ‘d’ is ‘0’, the result is stored in the W register. If ‘d’ is ‘1’, the result is stored back in register ‘f’.

37.0 ELECTRICAL SPECIFICATIONS

37.1 Absolute Maximum Ratings(†)

Ambient temperature under bias ..... -40°C to +125°C
Storage temperature ..... -65°C to +150°C
Voltage on pins with respect to V_{SS}
- on V_{DD} pin
  - PIC16F15324/44 ..... -0.3V to +6.5V
  - PIC16LF15324/44 ..... -0.3V to +4.0V
- on $\overline{MCLR}$ pin ..... -0.3V to +9.0V
- on all other pins ..... -0.3V to (V_{DD} + 0.3V)

Maximum current
- on V_{SS} pin(1)
  - -40°C ≤ T_A ≤ +85°C ..... 250 mA
  - 85°C < T_A ≤ +125°C ..... 85 mA
- on V_{DD} pin for 28-Pin devices(1)
  - -40°C ≤ T_A ≤ +85°C ..... 250 mA
  - 85°C < T_A ≤ +125°C ..... 85 mA
- on V_{DD} pin for 40-Pin devices(1)
  - -40°C ≤ T_A ≤ +85°C ..... 350 mA
  - 85°C < T_A ≤ +125°C ..... 120 mA
- on any standard I/O pin ..... ±50 mA

Clamp current, I_K (V_{PIN} < 0 or V_{PIN} > V_{DD}) ..... ±20 mA
Total power dissipation(2) ..... 800 mW

Note 1: Maximum current rating requires even load distribution across I/O pins. Maximum current rating may be limited by the device package power dissipation characterizations, see Table 37-6 to calculate device specifications.

2: Power dissipation is calculated as follows:

$P_{DIS} = V_{DD} \times \{I_{DD} - \Sigma I_{OH}\} + \Sigma \{(V_{DD} - V_{OH}) \times I_{OH}\} + \Sigma (V_{OI} \times I_{OL})$

† NOTICE: Stresses above those listed under “Absolute Maximum Ratings” may cause permanent damage to the device. This is a stress rating only and functional operation of the device at those or any other conditions above those indicated in the operation listings of this specification is not implied. Exposure above maximum rating conditions for extended periods may affect device reliability.

37.2 Standard Operating Conditions

The standard operating conditions for any device are defined as:

Operating Voltage: $V_{DDMIN} \leq V_{DD} \leq V_{DDMAX}$
Operating Temperature: $T_{A_MIN} \leq T_A \leq T_{A_MAX}$

V_{DD} — Operating Supply Voltage(1)

PIC16LF15324/44

V_{DDMIN} (Fosc ≤ 16 MHz) ..... +1.8V
V_{DDMIN} (Fosc ≤ 32 MHz) ..... +2.5V
V_{DDMAX} ..... +3.6V

PIC16F15324/44

V_{DDMIN} (Fosc ≤ 16 MHz) ..... +2.3V
V_{DDMIN} (Fosc ≤ 32 MHz) ..... +2.5V
V_{DDMAX} ..... +5.5V

T_A — Operating Ambient Temperature Range

Industrial Temperature

T_{A_MIN} ..... -40°C
T_{A_MAX} ..... +85°C

Extended Temperature

T_{A_MIN} ..... -40°C
T_{A_MAX} ..... +125°C

Note 1: See Parameter Supply Voltage, DS Characteristics: Supply Voltage.

FIGURE 37-1: VOLTAGE FREQUENCY GRAPH, -40°C ≤ TA ≤ +125°C, PIC16F15324/44 ONLY

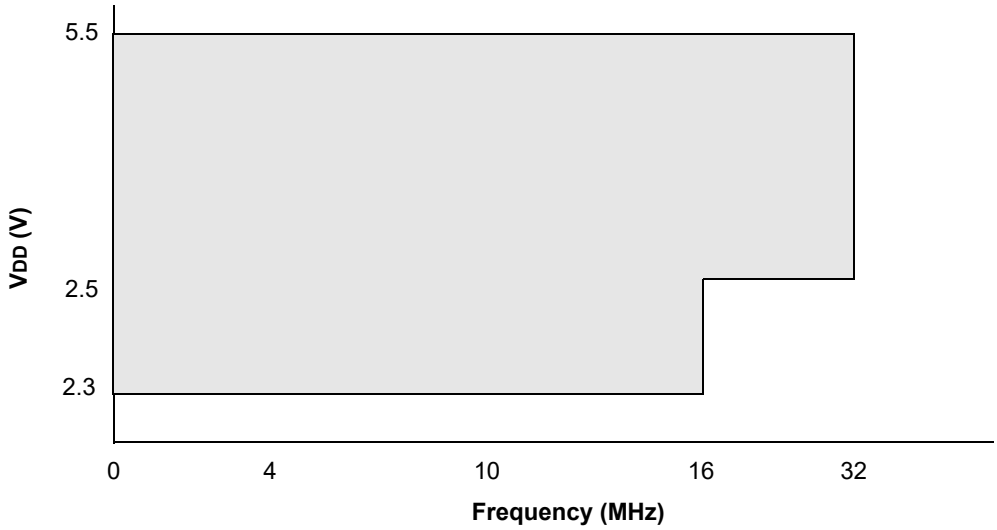

Note 1: The shaded region indicates the permissible combinations of voltage and frequency.
2: Refer to Table 37-7 for each Oscillator mode's supported frequencies.

FIGURE 37-2: VOLTAGE FREQUENCY GRAPH, -40°C ≤ TA ≤ +125°C, PIC16F15324/44 ONLY

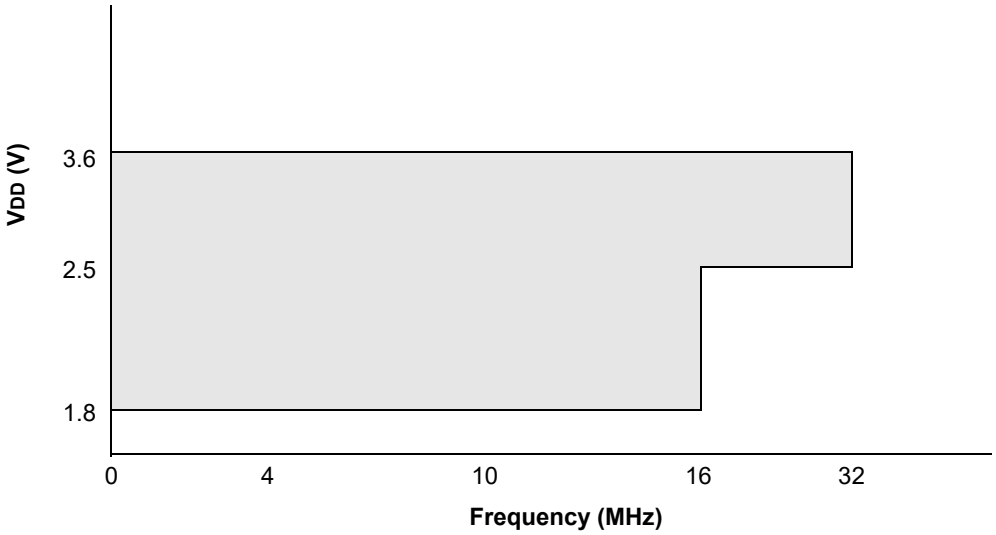

Note 1: The shaded region indicates the permissible combinations of voltage and frequency.
2: Refer to Table 37-7 for each Oscillator mode's supported frequencies.

37.3 DC Characteristics

TABLE 37-1: SUPPLY VOLTAGE

PIC16LF15324/44			Standard Operating Conditions (unless otherwise stated)				
PIC16F15324/44							
Param. No.	Sym.	Characteristic	Min.	Typ.†	Max.	Units	Conditions
Supply Voltage							
D002	VDD		1.8 2.5	— —	3.6 3.6	V V	FOSC ≤ 16 MHz FOSC > 16 MHz
D002	VDD		2.3 2.5	— —	5.5 5.5	V V	FOSC ≤ 16 MHz FOSC ≥ 16 MHz
RAM Data Retention(1)							
D003	VDR		1.5	—	—	V	Device in Sleep mode
D003	VDR		1.7	—	—	V	Device in Sleep mode
Power-on Reset Release Voltage(2)							
D004	VPOR		—	1.6	—	V	BOR or LPBOR disabled(3)
D004	VPOR		—	1.6	—	V	BOR or LPBOR disabled(3)
Power-on Reset Rearm Voltage(2)							
D005	VPORR		—	0.8	—	V	BOR or LPBOR disabled(3)
D005	VPORR		—	1.5	—	V	BOR or LPBOR disabled(3)
VDD Rise Rate to ensure internal Power-on Reset signal(2)							
D006	SVDD		0.05	—	—	V/ms	BOR or LPBOR disabled(3)
D006	SVDD		0.05	—	—	V/ms	BOR or LPBOR disabled(3)

† Data in “Typ.” column is at 3.0V, 25°C unless otherwise stated. These parameters are for design guidance only and are not tested.

Note 1: This is the limit to which VDD can be lowered in Sleep mode without losing RAM data.

2: See Figure 37-3, POR and POR REARM with Slow Rising VDD.

3: See Table 37-11 for BOR and LPBOR trip point information.

4: = F device

FIGURE 37-3: POR AND POR REARM WITH SLOW RISING VDD

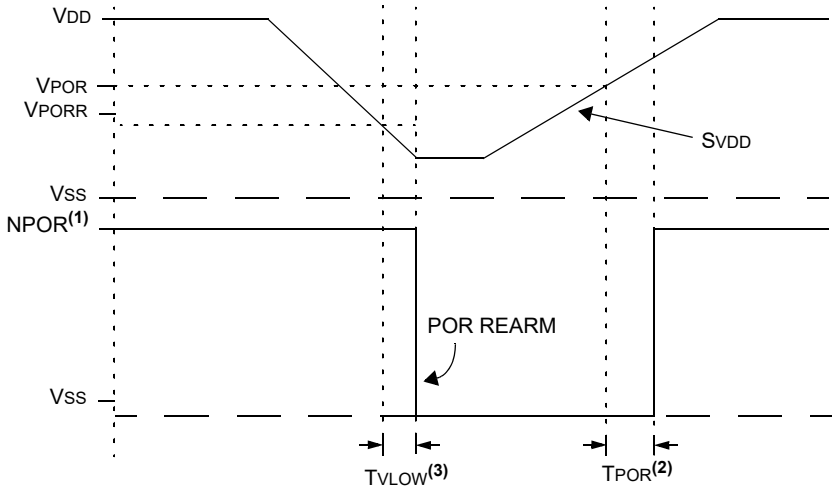

Note 1: When NPOR is low, the device is held in Reset.
2: TPOR 1 μs typical.
3: TVLOW 2.7 μs typical.

TABLE 37-2: SUPPLY CURRENT (I_{DD})(1,2,4)

PIC16LF15324/44			Standard Operating Conditions (unless otherwise stated)					
PIC16F15324/44								
Param. No.	Symbol	Device Characteristics	Min.	Typ.†	Max.	Units	Conditions	
							V_{DD}	Note
D100	$I_{DD_{XT4}}$	XT = 4 MHz	—	350	435	μA	3.0V	
D100	$I_{DD_{XT4}}$	XT = 4 MHz	—	400	485	μA	3.0V	
D101	$I_{DD_{HFO16}}$	HFINTOSC = 16 MHz	—	1.5	2.0	mA	3.0V	
D101	$I_{DD_{HFO16}}$	HFINTOSC = 16 MHz	—	1.6	2.1	mA	3.0V	
D102	$I_{DD_{HFOPLL}}$	HFINTOSC = 32 MHz	—	2.8	3.5	mA	3.0V	
D102	$I_{DD_{HFOPLL}}$	HFINTOSC = 32 MHz	—	2.9	3.6	mA	3.0V	
D103	$I_{DD_{HSPLL32}}$	HS+PLL = 32 MHz	—	2.6	3.3	mA	3.0V	
D103	$I_{DD_{HSPLL32}}$	HS+PLL = 32 MHz	—	2.7	3.4	mA	3.0V	
D104	$I_{DD_{IDLE}}$	Idle mode, HFINTOSC = 16 MHz	—	0.92	1.3	mA	3.0V	
D104	$I_{DD_{IDLE}}$	Idle mode, HFINTOSC = 16 MHz	—	0.96	1.4	mA	3.0V	
D105	$I_{DD_{DOZE}}$(3)	Doze mode, HFINTOSC = 16 MHz, Doze Ratio = 16	—	1.01	—	mA	3.0V	Typical value only
D105	$I_{DD_{DOZE}}$(3)	Doze mode, HFINTOSC = 16 MHz, Doze Ratio = 16	—	1.05	—	mA	3.0V	Typical value only

† Data in “Typ.” column is at 3.0V, 25°C unless otherwise stated. These parameters are for design guidance only and are not tested.

Note 1: The test conditions for all I_{DD} measurements in active operation mode are: OSC1 = external square wave, from rail-to-rail; all I/O pins are outputs driven low; $\overline{MCLR}$ = V_{DD}; WDT disabled.

2: The supply current is mainly a function of the operating voltage and frequency. Other factors, such as I/O pin loading and switching rate, oscillator type, internal code execution pattern and temperature, also have an impact on the current consumption.

3: $I_{DD_{DOZE}}$ = [$I_{DD_{IDLE}}$*(N-1)/N] + $I_{DD_{HFO}}$16/N where N = DOZE Ratio (Register 11-2).

4: PMD bits are all in the default state, no modules are disabled.

5: = F device

TABLE 37-3: POWER-DOWN CURRENT (I_{PD})(1,2)

PIC16LF15324/44				Standard Operating Conditions (unless otherwise stated)					
PIC16F15324/44				Standard Operating Conditions (unless otherwise stated) VREGPM = 1					
Param. No.	Symbol	Device Characteristics	Min.	Typ.†	Max. +85°C	Max. +125°C	Units	Conditions	
								V_{DD}	Note
D200	I_{PD}	I_{PD} Base	—	0.06	2	5.0	μA	3.0V	
D200 D200A	I_{PD}	I_{PD} Base	—	0.42	3	5.6	μA	3.0V	
			—	17.8	25	27	μA	3.0V	VREGPM = 0
D201	I_{PD_WDT}	Low-Frequency Internal Oscillator/ WDT	—	0.72	3.5	5.8	μA	3.0V	
D201	I_{PD_WDT}	Low-Frequency Internal Oscillator/ WDT	—	0.89	3.6	6.1	μA	3.0V	
D203	I_{PD_FVR}	FVR	—	43.7	70	72	μA	3.0V	
D203	I_{PD_FVR}	FVR	—	38.4	64	66	μA	3.0V	
D204	I_{PD_BOR}	Brown-out Reset (BOR)	—	9.7	14	18	μA	3.0V	
D204	I_{PD_BOR}	Brown-out Reset (BOR)	—	10	15	19	μA	3.0V	
D205	I_{PD_LPBOR}	Low-Power Brown-out Reset (LPBOR)	—	0.2	2.6	6.7	μA	3.0V	
D207	I_{PD_ADCA}	ADC	—	0.15	2	5	μA	3.0V	ADC is not converting (4)
D207	I_{PD_ADCA}	ADC	—	0.41	3	5.6	μA	3.0V	ADC is not converting (4)
D208	I_{PD_CMP}	Comparator	—	30	55	56	μA	3.0V	
D208	I_{PD_CMP}	Comparator	—	31	56	57	μA	3.0V	

† Data in “Typ.” column is at 3.0V, 25°C unless otherwise stated. These parameters are for design guidance only and are not tested.

Note 1: The peripheral current is the sum of the base I_{DD} and the additional current consumed when this peripheral is enabled. The peripheral Δ current can be determined by subtracting the base I_{DD} or I_{PD} current from this limit. Max. values may be used when calculating total current consumption.

2: The power-down current in Sleep mode does not depend on the oscillator type. Power-down current is measured with the part in Sleep mode with all I/O pins in high-impedance state and tied to V_{SS}.

3: All peripheral currents listed are on a per-peripheral basis if more than one instance of a peripheral is available.

4: ADC clock source is FRC.

5: = F device

TABLE 37-4: I/O PORTS

Standard Operating Conditions (unless otherwise stated)							
Param. No.	**Sym.**	**Characteristic**	**Min.**	**Typ†**	**Max.**	**Units**	**Conditions**
	V_{IL}	**Input Low Voltage**					
		I/O PORT:					
D300		with TTL buffer	—	—	0.8	V	$4.5V \le V_{DD} \le 5.5V$
D301			—	—	0.15 V_{DD}	V	$1.8V \le V_{DD} \le 4.5V$
D302		with Schmitt Trigger buffer	—	—	0.2 V_{DD}	V	$2.0V \le V_{DD} \le 5.5V$
D303		with I^2C levels	—	—	0.3 V_{DD}	V	
D304		with SMBus levels	—	—	0.8	V	$2.7V \le V_{DD} \le 5.5V$
D305		$\overline{MCLR}$	—	—	0.2 V_{DD}	V	
	V_{IH}	**Input High Voltage**					
		I/O PORT:					
D320		with TTL buffer	2.0	—	—	V	$4.5V \le V_{DD} \le 5.5V$
D321			0.25 V_{DD} + 0.8	—	—	V	$1.8V \le V_{DD} \le 4.5V$
D322		with Schmitt Trigger buffer	0.8 V_{DD}	—	—	V	$2.0V \le V_{DD} \le 5.5V$
D323		with I^2C levels	0.7 V_{DD}	—	—	V	
D324		with SMBus levels	2.1	—	—	V	$2.7V \le V_{DD} \le 5.5V$
D325		$\overline{MCLR}$	0.7 V_{DD}	—	—	V	
	I_{IL}	**Input Leakage Current(1)**					
D340		I/O Ports	—	± 5	± 125	nA	$V_{SS} \le V_{PIN} \le V_{DD}$, Pin at high-impedance, 85°C
D341			—	± 5	± 1000	nA	$V_{SS} \le V_{PIN} \le V_{DD}$, Pin at high-impedance, 125°C
D342		$\overline{MCLR}$(2)	—	± 50	± 200	nA	$V_{SS} \le V_{PIN} \le V_{DD}$, Pin at high-impedance, 85°C
	I_{PUR}	**Weak Pull-up Current**					
D350			25	120	200	μA	V_{DD} = 3.0V, V_{PIN} = V_{SS}
	V_{OL}	**Output Low Voltage**					
D360		I/O ports	—	—	0.6	V	I_{OL} = 10.0mA, V_{DD} = 3.0V
	V_{OH}	**Output High Voltage**					
D370		I/O ports	V_{DD} - 0.7	—	—	V	I_{OH} = 6.0 mA, V_{DD} = 3.0V
D380	C_{IO}	**All I/O pins**	—	5	50	pF	

† Data in "Typ" column is at 3.0V, 25°C unless otherwise stated. These parameters are for design guidance only and are not tested.

Note 1: Negative current is defined as current sourced by the pin.

2: The leakage current on the $\overline{MCLR}$ pin is strongly dependent on the applied voltage level. The specified levels represent normal operating conditions. Higher leakage current may be measured at different input voltages.

TABLE 37-5: MEMORY PROGRAMMING SPECIFICATIONS

Standard Operating Conditions (unless otherwise stated)							
Param. No.	**Sym.**	**Characteristic**	**Min.**	**Typ†**	**Max.**	**Units**	**Conditions**
High Voltage Entry Programming Mode Specifications							
MEM01	V_{IHH}	Voltage on $\overline{MCLR}$/VPP pin to enter programming mode	8	—	9	V	**(Note 2, Note 3)**
MEM02	I_{PPGM}	Current on $\overline{MCLR}$/VPP pin during programming mode	—	1	—	mA	**(Note 2)**
Programming Mode Specifications							
MEM10	V_{BE}	VDD for Bulk Erase	—	2.7	—	V	
MEM11	I_{DDPGM}	Supply Current during Programming operation	—	—	10	mA	
Program Flash Memory Specifications							
MEM30	E_P	Flash Memory Cell Endurance	10k	—	—	E/W	-40°C ≤ TA ≤ +85°C (**Note 1**)
MEM31	E_P	HEF Flash Memory Cell Endurance	100k	—	—	E/W	-40°C ≤ TA ≤ +85°C (**Note 1**)
MEM32	T_{P_RET}	Characteristic Retention	—	40	—	Year	Provided no other specifications are violated
MEM33	V_{P_RD}	VDD for Read operation	VDDMIN	—	VDDMAX	V	
MEM34	V_{P_REW}	VDD for Row Erase or Write operation	VDDMIN	—	VDDMAX	V	
MEM35	T_{P_REW}	Self-Timed Row Erase or Self-Timed Write	—	2.0	2.5	ms	

† Data in “Typ” column is at 3.0V, 25°C unless otherwise stated. These parameters are for design guidance only and are not tested.

Note 1: Flash Memory Cell Endurance for the Flash memory is defined as: One Row Erase operation and one Self-Timed Write.

2: Required only if CONFIG4, bit LVP is disabled.

3: The MPLAB® ICD2 does not support variable VPP output. Circuitry to limit the ICD2 VPP voltage must be placed between the ICD2 and target system when programming or debugging with the ICD2.

TABLE 37-6: THERMAL CHARACTERISTICS

Standard Operating Conditions (unless otherwise stated)

Param. No.	Sym.	Characteristic	Typ.	Units	Conditions
TH01	θ_{JA}	Thermal Resistance Junction to Ambient	70	°C/W	14-pin SPDIP package
			95.3C	°C/W	14-pin SOIC package
			100.0	°C/W	14-pin TSSOP package
			51.5	°C/W	16-pin UQFN 4x4mm package
			30.9	°C/W	16-pin VQFN 4x4mm package
			62.2	°C/W	20-pin PDIP package
			87.3	°C/W	20-pin SSOP package
			77.7	°C/W	20-pin SOIC package
			43.0	°C/W	20-pin UQFN 4x4mm package
TH02	θ_{JC}	Thermal Resistance Junction to Case	32.75	°C/W	14-pin PDIP package
			31.0	°C/W	14-pin SOIC package
			24.4	°C/W	14-pin TSSOP package
			5.4	°C/W	16-pin UQFN 4x4mm package
			2.38	°C/W	16-pin VQFN 4x4mm package
			27.5	°C/W	20-pin PDIP package
			31.1	°C/W	20-pin SSOP package
			23.1	°C/W	20-pin SOIC package
			5.3	°C/W	20-pin UQFN 4x4mm package
TH03	T_{JMAX}	Maximum Junction Temperature	150	°C	
TH04	PD	Power Dissipation	—	W	$PD = P_{INTERNAL} + P_{I/O}$
TH05	$P_{INTERNAL}$	Internal Power Dissipation	—	W	$P_{INTERNAL} = I_{DD} \times V_{DD}$ (1)
TH06	$P_{I/O}$	I/O Power Dissipation	—	W	$P_{I/O} = \Sigma (I_{OL} * V_{OL}) + \Sigma (I_{OH} * (V_{DD} - V_{OH}))$
TH07	P_{DER}	Derated Power	—	W	$P_{DER} = PD_{MAX} - (T_J - T_A)/\theta_{JA}$ (2)

Note 1: I_{DD} is current to run the chip alone without driving any load on the output pins.

2: T_A = Ambient Temperature, T_J = Junction Temperature

37.4 AC Characteristics

FIGURE 37-4: LOAD CONDITIONS

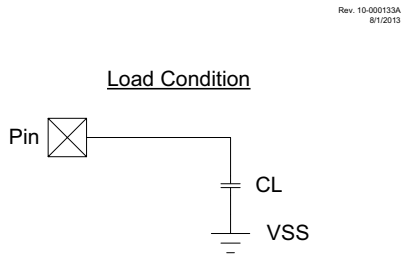

Legend: CL=50 pF for all pins

FIGURE 37-5: CLOCK TIMING

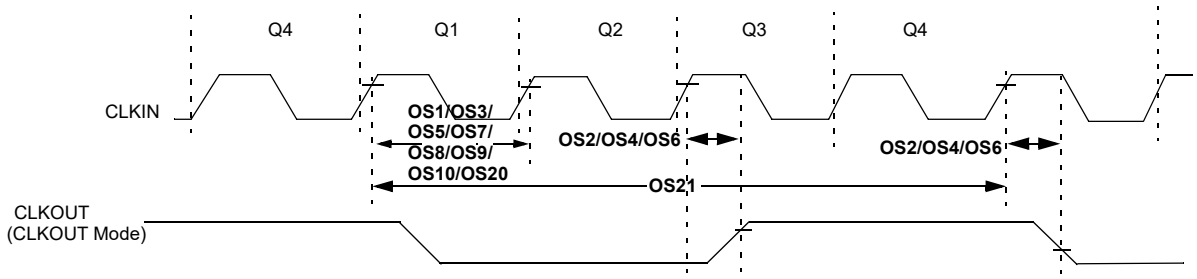

Note 1: See Table 37-7.

TABLE 37-7: EXTERNAL CLOCK/OSCILLATOR TIMING REQUIREMENTS

Standard Operating Conditions (unless otherwise stated)

Param. No.	Sym.	Characteristic	Min.	Typ†	Max.	Units	Conditions
ECL Oscillator							
OS1	F_{ECL}	Clock Frequency	—	—	500	kHz	
OS2	T_{ECL_DC}	Clock Duty Cycle	40	—	60	%	
ECM Oscillator							
OS3	F_{ECM}	Clock Frequency	—	—	4	MHz	
OS4	T_{ECM_DC}	Clock Duty Cycle	40	—	60	%	
ECH Oscillator							
OS5	F_{ECH}	Clock Frequency	—	—	32	MHz	
OS6	T_{ECH_DC}	Clock Duty Cycle	40	—	60	%	
LP Oscillator							
OS7	F_{LP}	Clock Frequency	—	—	100	kHz	**Note 4**
XT Oscillator							
OS8	F_{XT}	Clock Frequency	—	—	4	MHz	**Note 4**
HS Oscillator							
OS9	F_{HS}	Clock Frequency	—	—	20	MHz	**Note 4**
System Oscillator							
OS20	F_{OSC}	System Clock Frequency	—	—	32	MHz	**(Note 2, Note 3)**
OS21	F_{CY}	Instruction Frequency	—	FOSC/4	—	MHz	
OS22	T_{CY}	Instruction Period	125	$1/F_{CY}$	—	ns	

* These parameters are characterized but not tested.

† Data in “Typ” column is at 3.0V, 25°C unless otherwise stated. These parameters are for design guidance only and are not tested.

Note 1: Instruction cycle period (TCY) equals four times the input oscillator time base period. All specified values are based on characterization data for that particular oscillator type under standard operating conditions with the device executing code. Exceeding these specified limits may result in an unstable oscillator operation and/or higher than expected current consumption. All devices are tested to operate at “min” values with an external clock applied to OSC1 pin. When an external clock input is used, the “max” cycle time limit is “DC” (no clock) for all devices.

2: The system clock frequency (FOSC) is selected by the “main clock switch controls” as described in **Section 9.0 “Oscillator Module (with Fail-Safe Clock Monitor)”**.

3: The system clock frequency (FOSC) must meet the voltage requirements defined in the **Section 37.2 “Standard Operating Conditions”**.

4: LP, XT and HS oscillator modes require an appropriate crystal or resonator to be connected to the device. For clocking the device with the external square wave, one of the EC mode selections must be used.

TABLE 37-8: INTERNAL OSCILLATOR PARAMETERS(1)

Standard Operating Conditions (unless otherwise stated)							
Param. No.	**Sym.**	**Characteristic**	**Min.**	**Typ†**	**Max.**	**Units**	**Conditions**
OS50	FHFOSC	Precision Calibrated HFINTOSC Frequency	—	4 8 12 16 32	—	MHz	(**Note 2**)
OS51	FHFOSCLP	Low-Power Optimized HFINTOSC Frequency	0.93 1.86 0.88 1.76	1 2 1 2	1.07 2.14 1.12 2.24	MHz MHz MHz MHz	-40°C to 85°C -40°C to 85°C -40°C to 125°C -40°C to 125°C
OS52	FMFOSC	Internal Calibrated MFINTOSC Frequency	—	500	—	kHz	
OS53*	FLFOSC	Internal LFINTOSC Frequency	—	31	—	kHz	
OS54*	THFOSCST	HFINTOSC Wake-up from Sleep Start-up Time	— —	11 50	20 —	µs µs	VREGPM = 0 VREGPM = 1
OS56	TLFOSCST	LFINTOSC Wake-up from Sleep Start-up Time	—	0.2	—	ms	

* These parameters are characterized but not tested.

† Data in "Typ" column is at 3.0V, 25°C unless otherwise stated. These parameters are for design guidance only and are not tested.

Note 1: To ensure these oscillator frequency tolerances, VDD and VSS must be capacitively decoupled as close to the device as possible. 0.1 µF and 0.01 µF values in parallel are recommended.

2: See Figure 37-6: Precision Calibrated HFINTOSC Frequency Accuracy Over Device VDD and Temperature.

FIGURE 37-6: PRECISION CALIBRATED HFINTOSC FREQUENCY ACCURACY OVER DEVICE VDD AND TEMPERATURE

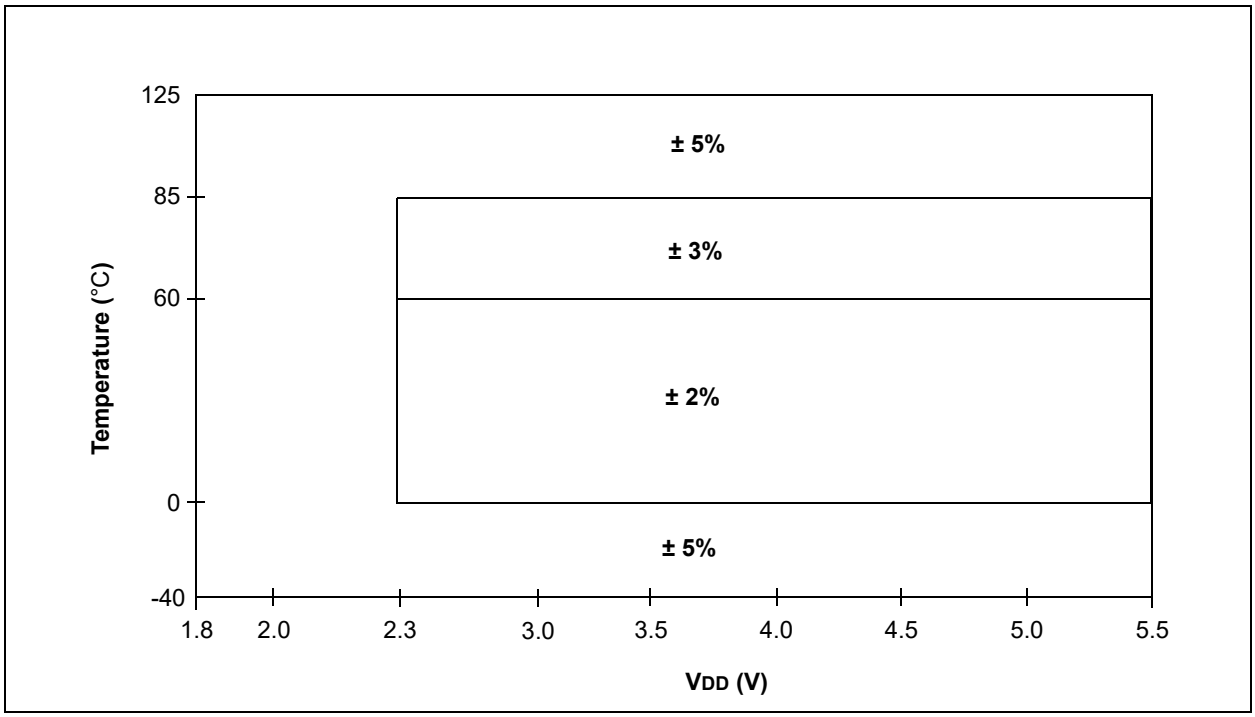

TABLE 37-9: PLL SPECIFICATIONS

Standard Operating Conditions (unless otherwise stated) VDD ≥ 2.5V							
Param. No.	**Sym.**	**Characteristic**	**Min.**	**Typ†**	**Max.**	**Units**	**Conditions**
PLL01	FPLLIN	PLL Input Frequency Range	4	—	8	MHz	
PLL02	FPLLOUT	PLL Output Frequency Range	16	—	32	MHz	**Note 1**
PLL03	TPLLST	PLL Lock Time from Start-up	—	200	—	µs	
PLL04	FPLLJIT	PLL Output Frequency Stability (Jitter)	-0.25	—	0.25	%	

* These parameters are characterized but not tested.

† Data in “Typ” column is at 5V, 25°C unless otherwise stated. These parameters are for design guidance only and are not tested.

Note 1: The output frequency of the PLL must meet the FOSC requirements listed in Parameter D002.

FIGURE 37-7: CLKOUT AND I/O TIMING

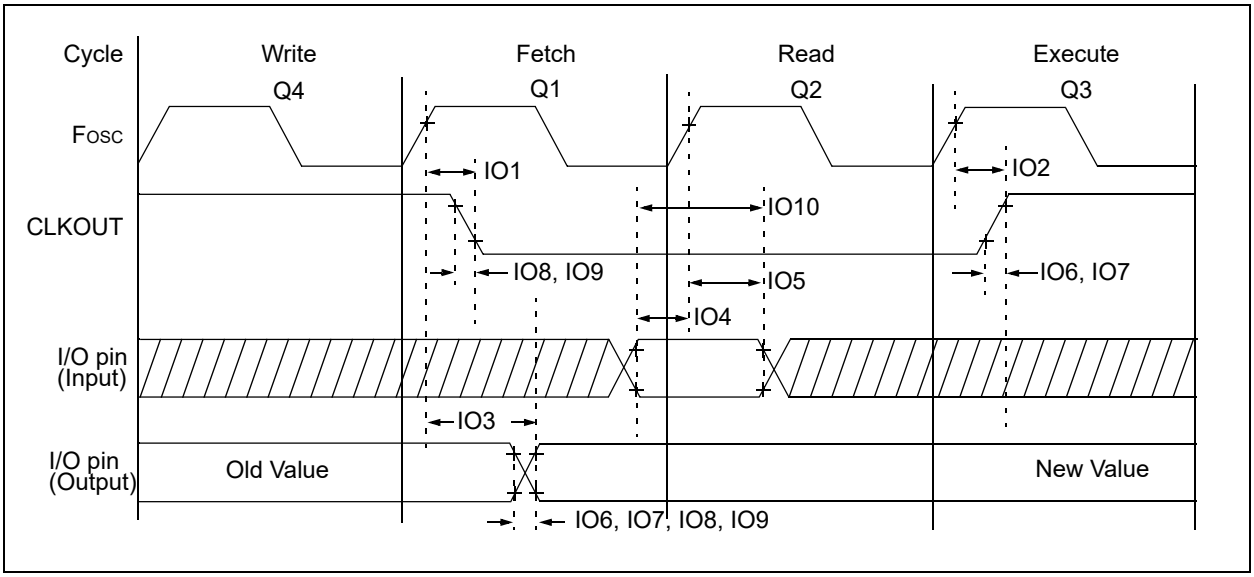

TABLE 37-10: I/O AND CLKOUT TIMING SPECIFICATIONS

Standard Operating Conditions (unless otherwise stated)							
Param. No.	**Sym.**	**Characteristic**	**Min.**	**Typ†**	**Max.**	**Units**	**Conditions**
IO1*	$T_{CLKOUTH}$	CLKOUT rising edge delay (rising edge Fosc (Q1 cycle) to falling edge CLKOUT	—	—	70	ns	
IO2*	$T_{CLKOUTL}$	CLKOUT falling edge delay (rising edge Fosc (Q3 cycle) to rising edge CLKOUT	—	—	72	ns	
IO3*	T_{IO_VALID}	Port output valid time (rising edge Fosc (Q1 cycle) to port valid)	—	50	70	ns	
IO4*	T_{IO_SETUP}	Port input setup time (Setup time before rising edge Fosc – Q2 cycle)	20	—	—	ns	
IO5*	T_{IO_HOLD}	Port input hold time (Hold time after rising edge Fosc – Q2 cycle)	50	—	—	ns	
IO6*	T_{IOR_SLREN}	Port I/O rise time, slew rate enabled	—	25	—	ns	V_{DD} = 3.0V
IO7*	T_{IOR_SLRDIS}	Port I/O rise time, slew rate disabled	—	5	—	ns	V_{DD} = 3.0V
IO8*	T_{IOF_SLREN}	Port I/O fall time, slew rate enabled	—	25	—	ns	V_{DD} = 3.0V
IO9*	T_{IOF_SLRDIS}	Port I/O fall time, slew rate disabled	—	5	—	ns	V_{DD} = 3.0V
IO10*	T_{INT}	INT pin high or low time to trigger an interrupt	25	—	—	ns	
IO11*	T_{IOC}	Interrupt-on-Change minimum high or low time to trigger interrupt	25	—	—	ns	

*These parameters are characterized but not tested.

FIGURE 37-8: RESET, WATCHDOG TIMER, OSCILLATOR START-UP TIMER AND POWER-UP TIMER TIMING

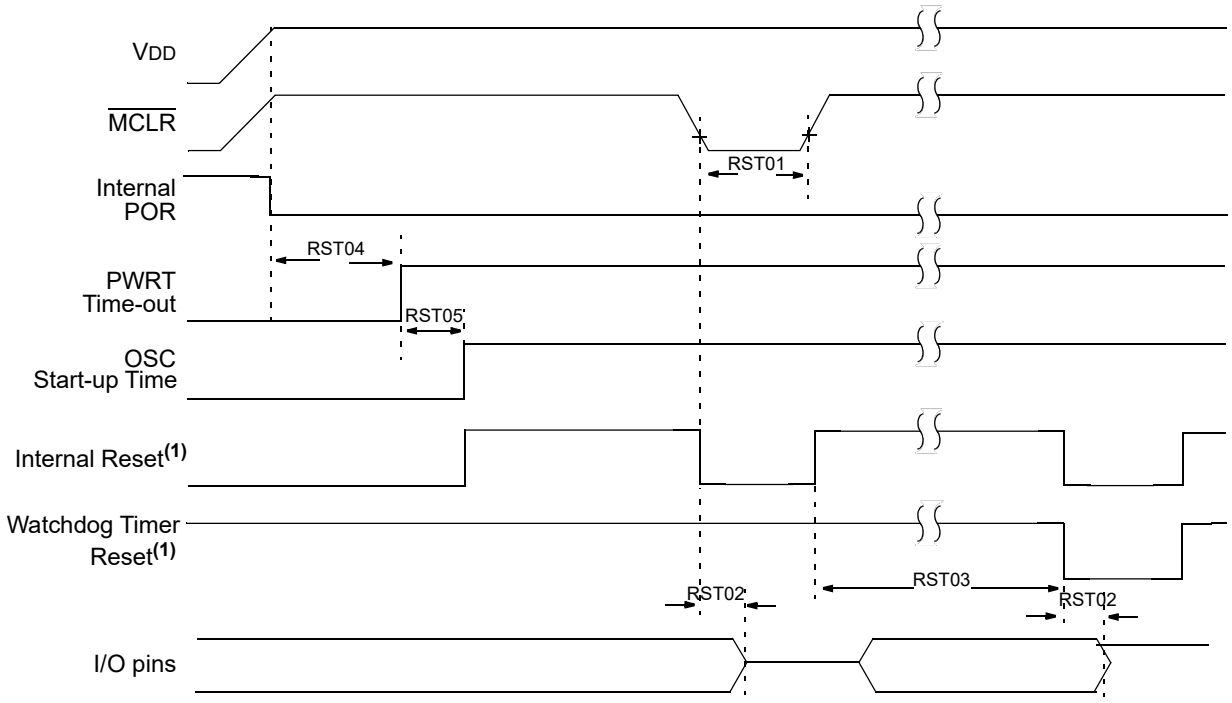

Note 1: Asserted low.

FIGURE 37-9: BROWN-OUT RESET TIMING AND CHARACTERISTICS

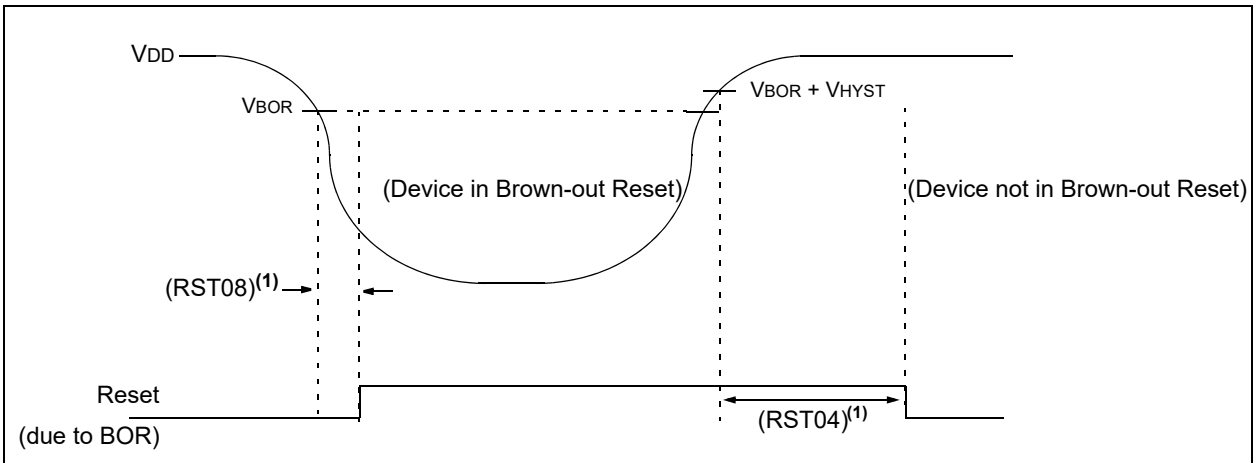

Note 1: 64 ms delay only if $\overline{\text{PWRTE}}$ bit in the Configuration Word register is programmed to '0'.

TABLE 37-11: RESET, WDT, OSCILLATOR START-UP TIMER, POWER-UP TIMER, BROWN-OUT RESET AND LOW-POWER BROWN-OUT RESET SPECIFICATIONS

Standard Operating Conditions (unless otherwise stated)							
Param. No.	**Sym.**	**Characteristic**	**Min.**	**Typ†**	**Max.**	**Units**	**Conditions**
RST01*	TMCLR	$\overline{\text{MCLR}}$ Pulse Width Low to ensure Reset	2	—	—	μs	
RST02*	TIOZ	I/O high-impedance from Reset detection	—	—	2	μs	
RST03	TWDT	Watchdog Timer Time-out Period	—	16	—	ms	16 ms Nominal Reset Time
RST04*	TPWRT	Power-up Timer Period	—	65	—	ms	
RST05	TOST	Oscillator Start-up Timer Period(1,2)	—	1024	—	TOSC	
RST06	VBOR	Brown-out Reset Voltage(4)	2.55 2.30 1.80	2.70 2.45 1.90	2.85 2.60 2.10	V V V	BORV = 0 BORV = 1 (F devices) BORV = 1 (LF devices)
RST07	VBORHYS	Brown-out Reset Hysteresis	—	40	—	mV	
RST08	TBORDC	Brown-out Reset Response Time	—	3	—	μs	
RST09	VLPBOR	Low-Power Brown-out Reset Voltage	1.8	2.1	2.5	V	LF Devices Only

* These parameters are characterized but not tested.

† Data in "Typ" column is at 3.0V, 25°C unless otherwise stated. These parameters are for design guidance only and are not tested.

Note 1: By design, the Oscillator Start-up Timer (OST) counts the first 1024 cycles, independent of frequency.

2: To ensure these voltage tolerances, VDD and VSS must be capacitively decoupled as close to the device as possible. 0.1 μF and 0.01 μF values in parallel are recommended.

TABLE 37-12: ANALOG-TO-DIGITAL CONVERTER (ADC) ACCURACY SPECIFICATIONS(1,2):

Standard Operating Conditions (unless otherwise stated) VDD = 3.0V, TA = 25°C							
Param. No.	**Sym.**	**Characteristic**	**Min.**	**Typ†**	**Max.**	**Units**	**Conditions**
AD01	NR	Resolution	—	—	10	bit	
AD02	EIL	Integral Error	—	±0.1	±1.0	LSb	ADCREF+ = 3.0V, ADCREF-= 0V
AD03	EDL	Differential Error	—	±0.1	±1.0	LSb	ADCREF+ = 3.0V, ADCREF-= 0V
AD04	EOFF	Offset Error	—	±0.5	±2.5	LSb	ADCREF+ = 3.0V, ADCREF-= 0V
AD05	EGN	Gain Error	—	±0.2	±1.5	LSb	ADCREF+ = 3.0V, ADCREF-= 0V
AD06	VADREF	ADC Reference Voltage (ADREF+ - ADREF-)	1.8	—	VDD	V	
AD07	VAIN	Full-Scale Range	ADREF-	—	ADREF+	V	
AD08	ZAIN	Recommended Impedance of Analog Voltage Source	—	10	—	kΩ	
AD09	RVREF	ADC Voltage Reference Ladder Impedance	—	50	—	kΩ	**Note 3**

* These parameters are characterized but not tested.

† Data in "Typ" column is at 3.0V, 25°C unless otherwise stated. These parameters are for design guidance only and are not tested.

Note 1: Total Absolute Error is the sum of the offset, gain and integral nonlinearity (INL) errors.

2: The ADC conversion result never decreases with an increase in the input and has no missing codes.

3: This is the impedance seen by the VREF pads when the external reference pads are selected.

TABLE 37-13: ANALOG-TO-DIGITAL CONVERTER (ADC) CONVERSION TIMING SPECIFICATIONS

Standard Operating Conditions (unless otherwise stated)							
Param. No.	**Sym.**	**Characteristic**	**Min.**	**Typ†**	**Max.**	**Units**	**Conditions**
AD20	TAD	ADC Clock Period	1	—	9	μs	The requirement is to set ADCCS correctly to produce this period/ frequency.
AD21			1	2	6	μs	Using FRC as the ADC clock source ADOSC = 1
AD22	TCNV	Conversion Time	—	11	—	TAD	Set of GO/$\overline{\text{DONE}}$ bit to Clear of GO/ $\overline{\text{DONE}}$ bit
AD23	TACQ	Acquisition Time	—	2	—	μs	
AD24	THCD	Sample and Hold Capacitor Disconnect Time	—	2TAD + 1 TCY 3TAD + 2 TCY	—	μs	FOSC-based clock source FRC-based clock source

* These parameters are characterized but not tested.

† Data in "Typ" column is at 3.0V, 25°C unless otherwise stated. These parameters are for design guidance only and are not tested.

FIGURE 37-10: ADC CONVERSION TIMING (ADC CLOCK FOSC-BASED)

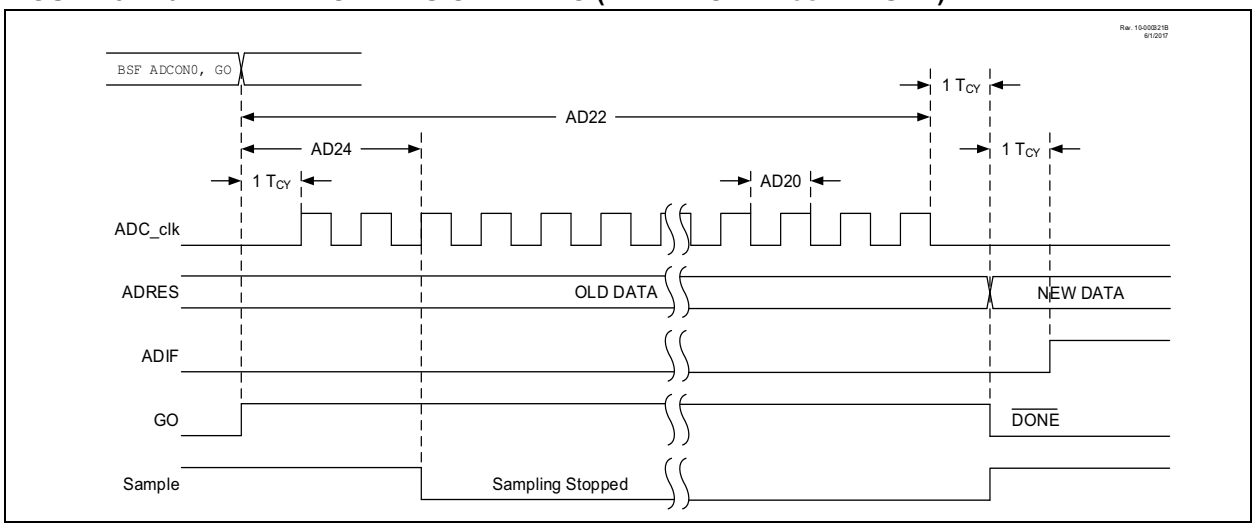

FIGURE 37-11: ADC CONVERSION TIMING (ADC CLOCK FROM FRC)

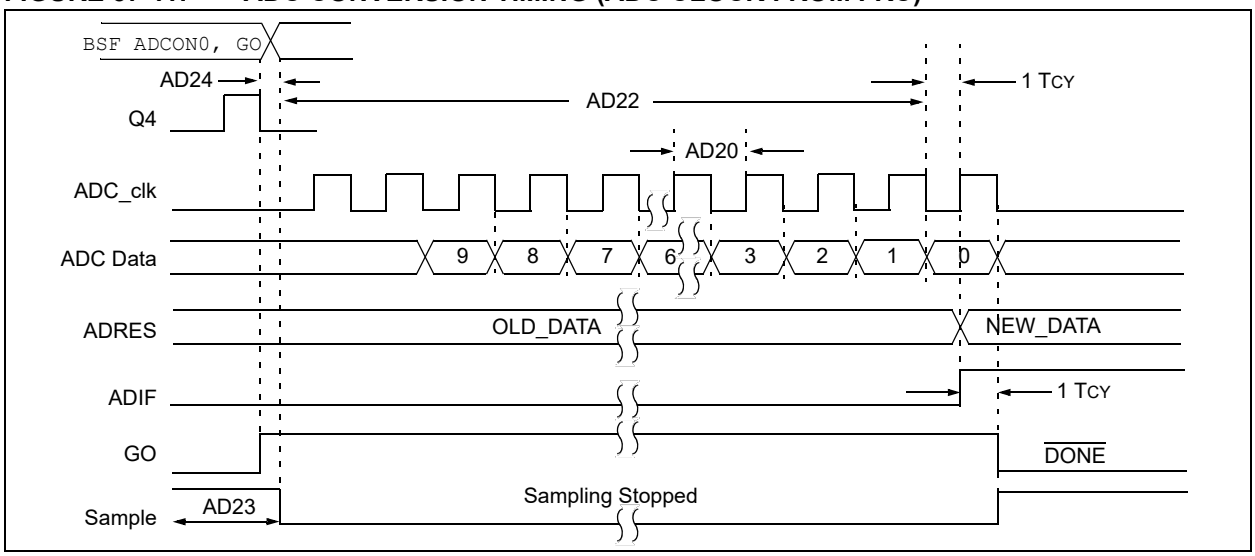

TABLE 37-14: COMPARATOR SPECIFICATIONS

Standard Operating Conditions (unless otherwise stated)
VDD = 3.0V, TA = 25°C

Param. No.	Sym.	Characteristics	Min.	Typ.	Max.	Units	Comments
CM01	VIOFF	Input Offset Voltage	—	—	±60	mV	VICM = VDD/2
CM02	VICM	Input Common Mode Range	GND	—	VDD	V	
CM03	CMRR	Common Mode Input Rejection Ratio	—	50	—	dB	
CM04	VHYST	Comparator Hysteresis	15	25	35	mV	
CM05	TRESP(1)	Response Time, Rising Edge	—	300	600	ns	
		Response Time, Falling Edge	—	220	500	ns	
CMOS6	TMCV2VO(2)	Mode Change to Valid Output	—	—	10	µs	

* These parameters are characterized but not tested.

Note 1: Response time measured with one comparator input at VDD/2, while the other input transitions from VSS to VDD.

2: A mode change includes changing any of the control register values, including module enable.

TABLE 37-15: 5-BIT DAC SPECIFICATIONS

Standard Operating Conditions (unless otherwise stated)
VDD = 3.0V, TA = 25°C

Param. No.	Sym.	Characteristics	Min.	Typ.	Max.	Units	Comments
DSB01	VLSB	Step Size	—	(VDACREF+ -VDACREF-) /32	—	V	
DSB01	VACC	Absolute Accuracy	—	—	± 0.5	LSb	
DSB03*	RUNIT	Unit Resistor Value	—	5000	—	Ω	
DSB04*	TST	Settling Time(1)	—	—	10	µs	

* These parameters are characterized but not tested.

† Data in "Typ" column is at 3.0V, 25°C unless otherwise stated. These parameters are for design guidance only and are not tested.

Note 1: Settling time measured while DACR[4:0] transitions from '00000' to '01111'.

TABLE 37-16: FIXED VOLTAGE REFERENCE (FVR) SPECIFICATIONS

Standard Operating Conditions (unless otherwise stated)

Param. No.	Symbol	Characteristic	Min.	Typ.	Max.	Units	Conditions
FVR01	VFVR1	1x Gain (1.024V)	-4	—	+4	%	VDD ≥ 2.5V, -40°C to 85°C
FVR02	VFVR2	2x Gain (2.048V)	-4	—	+4	%	VDD ≥ 2.5V, -40°C to 85°C
FVR03	VFVR4	4x Gain (4.096V)	-5	—	+5	%	VDD ≥ 4.75V, -40°C to 85°C
FVR04	TFVRST	FVR Start-up Time	—	25	—	us	
FVR05	FVRA1X/FVRC1X	FVR output voltage for 1x setting stored in the DIA	—	1024	—	mV	
FVR06	FVRA2X/FVRC2X	FVR output voltage for 2x setting stored in the DIA	—	2048	—	mV	
FVR07	FVRA4X/FVRC4X	FVR output voltage for 4x setting stored in the DIA	—	4096	—	mV	

TABLE 37-17: ZERO-CROSS DETECT (ZCD) SPECIFICATIONS

Standard Operating Conditions (unless otherwise stated)
VDD = 3.0V, TA = 25°C

Param. No.	Sym.	Characteristics	Min.	Typ†	Max.	Units	Comments
ZC01	VPINZC	Voltage on Zero Cross Pin	—	0.75	—	V	
ZC02	IZCD_MAX	Maximum source or sink current	—	—	600	μA	
ZC03	TRESPH	Response Time, Rising Edge	—	1	—	μs	
	TRESPL	Response Time, Falling Edge	—	1	—	μs	

† Data in "Typ" column is at 3.0V, 25°C unless otherwise stated. These parameters are for design guidance only and are not tested.

FIGURE 37-12: TIMER0 AND TIMER1 EXTERNAL CLOCK TIMINGS

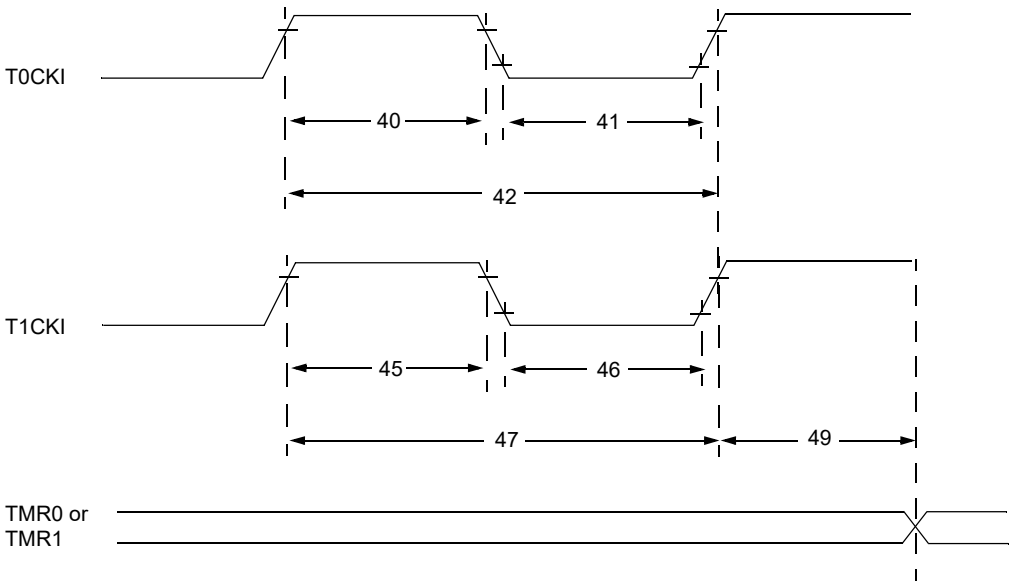

TABLE 37-18: TIMER0 AND TIMER1 EXTERNAL CLOCK REQUIREMENTS

Standard Operating Conditions (unless otherwise stated)
Operating Temperature -40°C ≤ TA ≤ +125°C

Param. No.	Sym.	Characteristic		Min.	Typ†	Max.	Units	Conditions
40*	TT0H	T0CKI High Pulse Width	No Prescaler	0.5 TCY + 20	—	—	ns	
			With Prescaler	10	—	—	ns	
41*	TT0L	T0CKI Low Pulse Width	No Prescaler	0.5 TCY + 20	—	—	ns	
			With Prescaler	10	—	—	ns	
42*	TT0P	T0CKI Period		Greater of: 20 or $\frac{T_{CY} + 40}{N}$	—	—	ns	N = prescale value
45*	TT1H	T1CKI High Time	Synchronous, No Prescaler	0.5 TCY + 20	—	—	ns	
			Synchronous, with Prescaler	15	—	—	ns	
			Asynchronous	30	—	—	ns	
46*	TT1L	T1CKI Low Time	Synchronous, No Prescaler	0.5 TCY + 20	—	—	ns	
			Synchronous, with Prescaler	15	—	—	ns	
			Asynchronous	30	—	—	ns	
47*	TT1P	T1CKI Input Period	Synchronous	Greater of: 30 or $\frac{T_{CY} + 40}{N}$	—	—	ns	N = prescale value
			Asynchronous	60	—	—	ns	
48	FT1	Secondary Oscillator Input Frequency Range (oscillator enabled by setting bit T1OSCEN)		32.4	32.768	33.1	kHz	
49*	TCKEZTMR1	Delay from External Clock Edge to Timer Increment		2 TOSC	—	7 TOSC	—	Timers in Sync mode

* These parameters are characterized but not tested.

† Data in “Typ” column is at 3.0V, 25°C unless otherwise stated. These parameters are for design guidance only and are not tested.

FIGURE 37-13: CAPTURE/COMPARE/PWM TIMINGS (CCP)

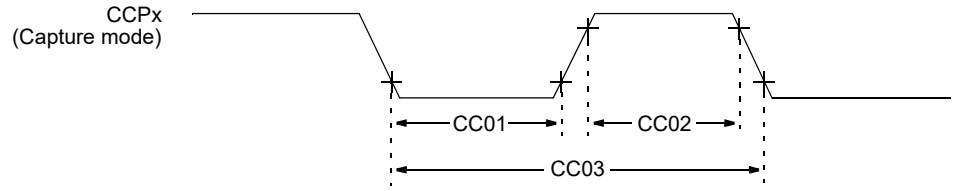

Note: Refer to Figure 37-4 for load conditions.

TABLE 37-19: CAPTURE/COMPARE/PWM REQUIREMENTS (CCP)

Standard Operating Conditions (unless otherwise stated)
Operating Temperature -40°C ≤ TA ≤ +125°C

Param. No.	Sym.	Characteristic		Min.	Typ†	Max.	Units	Conditions
CC01*	TccL	CCPx Input Low Time	No Prescaler	0.5TCY + 20	—	—	ns	
			With Prescaler	20	—	—	ns	
CC02*	TccH	CCPx Input High Time	No Prescaler	0.5TCY + 20	—	—	ns	
			With Prescaler	20	—	—	ns	
CC03*	TccP	CCPx Input Period		$\frac{3T_{CY} + 40}{N}$	—	—	ns	N = prescale value

* These parameters are characterized but not tested.

† Data in “Typ” column is at 3.0V, 25°C unless otherwise stated. These parameters are for design guidance only and are not tested.

FIGURE 37-14: CLC PROPAGATION TIMING

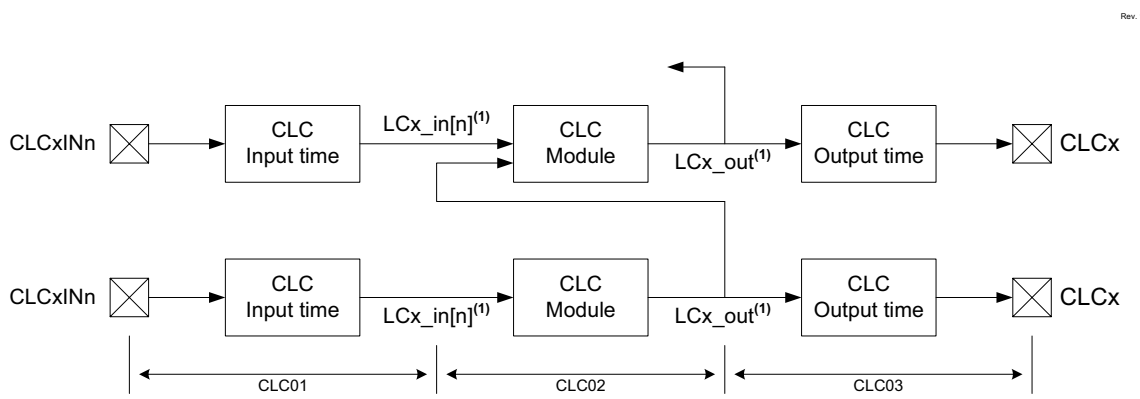

Note 1: See Figure 31-1 to identify specific CLC signals.

TABLE 37-20: CONFIGURABLE LOGIC CELL (CLC) CHARACTERISTICS

Standard Operating Conditions (unless otherwise stated) Operating temperature -40°C ≤ TA ≤ +125°C							
Param. No.	**Sym.**	**Characteristic**	**Min.**	**Typ†**	**Max.**	**Units**	**Conditions**
CLC01*	TCLCIN	CLC input time	—	7	IO5	ns	**(Note 1)**
CLC02*	TCLC	CLC module input to output propagation time	— —	24 12	— —	ns ns	VDD = 1.8V VDD > 3.6V
CLC03*	TCLCOUT	CLC output time Rise Time	—	IO7	—	—	**(Note 1)**
		Fall Time	—	IO8	—	—	**(Note 1)**
CLC04*	FCLCMAX	CLC maximum switching frequency	—	32	FOSC	MHz	

* These parameters are characterized but not tested.

† Data in "Typ" column is at 3.0V, 25°C unless otherwise stated. These parameters are for design guidance only and are not tested.

Note 1: See Table 37-10 for IO5, IO7 and IO8 rise and fall times.

FIGURE 37-15: EUSART SYNCHRONOUS TRANSMISSION (HOST/CLIENT) TIMING

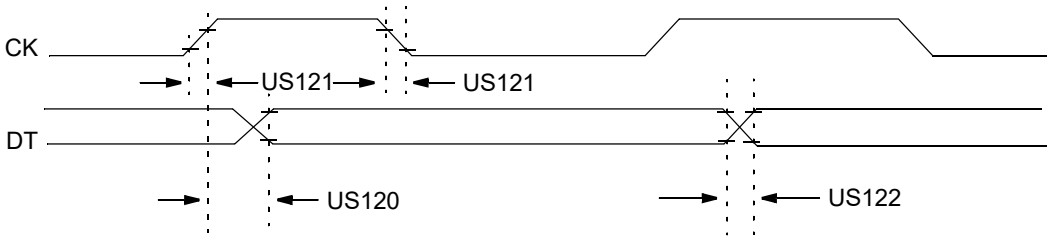

Note: Refer to Figure 37-4 for load conditions.

TABLE 37-21: EUSART SYNCHRONOUS TRANSMISSION CHARACTERISTICS

Standard Operating Conditions (unless otherwise stated)						
Param. No.	**Symbol**	**Characteristic**	**Min.**	**Max.**	**Units**	**Conditions**
US120	TCKH2DTV	SYNC XMIT (Host and Client) Clock high to data-out valid	—	80	ns	3.0V ≤ VDD ≤ 5.5V
			—	100	ns	1.8V ≤ VDD ≤ 5.5V
US121	TCKRF	Clock out rise time and fall time (Host mode)	—	45	ns	3.0V ≤ VDD ≤ 5.5V
			—	50	ns	1.8V ≤ VDD ≤ 5.5V
US122	TDTRF	Data-out rise time and fall time	—	45	ns	3.0V ≤ VDD ≤ 5.5V
			—	50	ns	1.8V ≤ VDD ≤ 5.5V

FIGURE 37-16: EUSART SYNCHRONOUS RECEIVE (HOST/CLIENT) TIMING

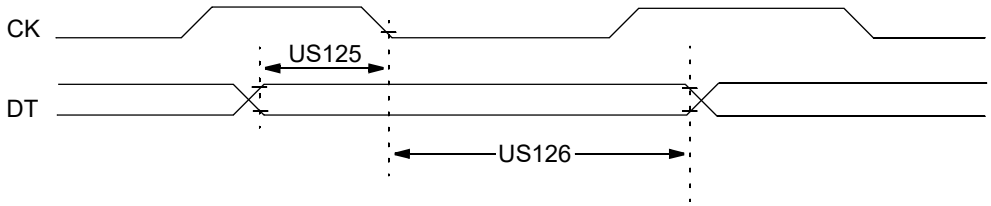

Note: Refer to Figure 37-4 for load conditions.

TABLE 37-22: EUSART SYNCHRONOUS RECEIVE REQUIREMENTS

Standard Operating Conditions (unless otherwise stated)						
Param. No.	**Symbol**	**Characteristic**	**Min.**	**Max.**	**Units**	**Conditions**
US125	TDTV2CKL	SYNC RCV (Host and Client) Data-setup before CK ↓ (DT hold time)	10	—	ns	
US126	TCKL2DTL	Data-hold after CK ↓ (DT hold time)	15	—	ns	

FIGURE 37-17: SPI HOST MODE TIMING (CKE = 0, SMP = 0)

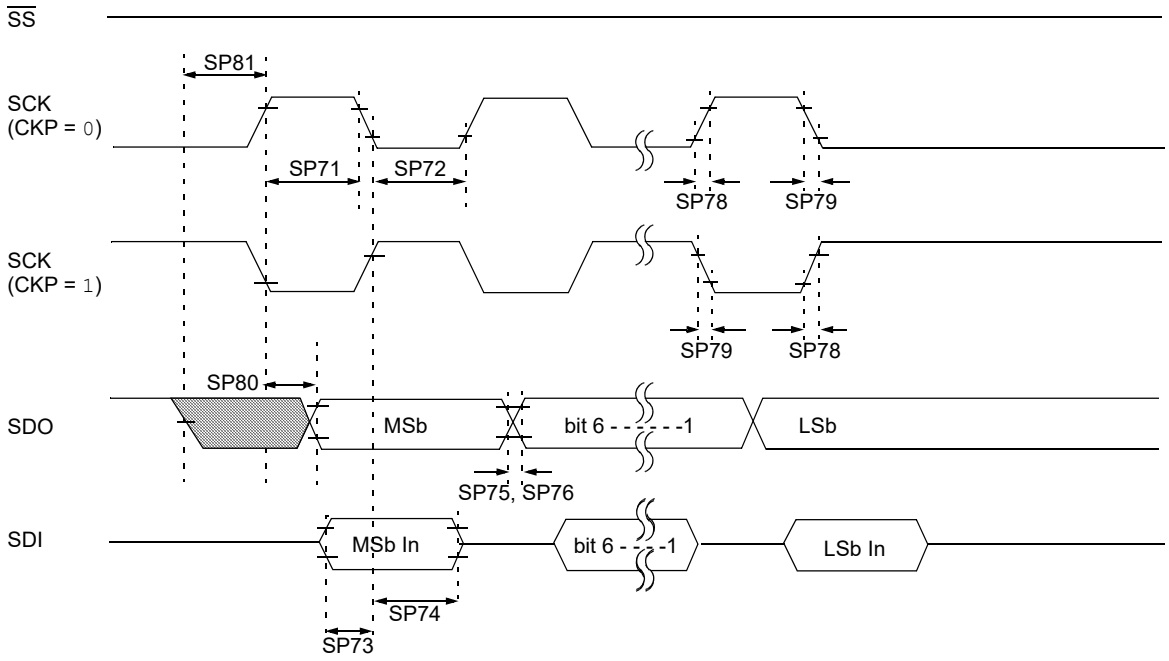

Note: Refer to Figure 37-4 for load conditions.

FIGURE 37-18: SPI HOST MODE TIMING (CKE = 1, SMP = 1)

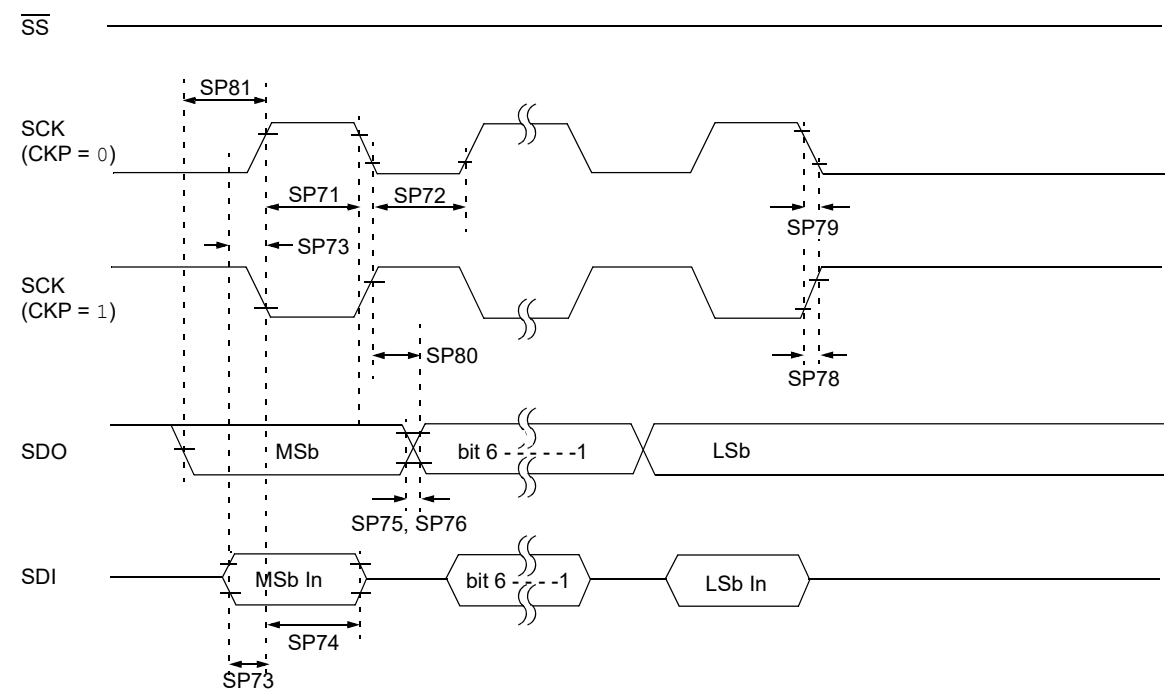

Note: Refer to Figure 37-4 for load conditions.

FIGURE 37-19: SPI CLIENT MODE TIMING (CKE = 0)

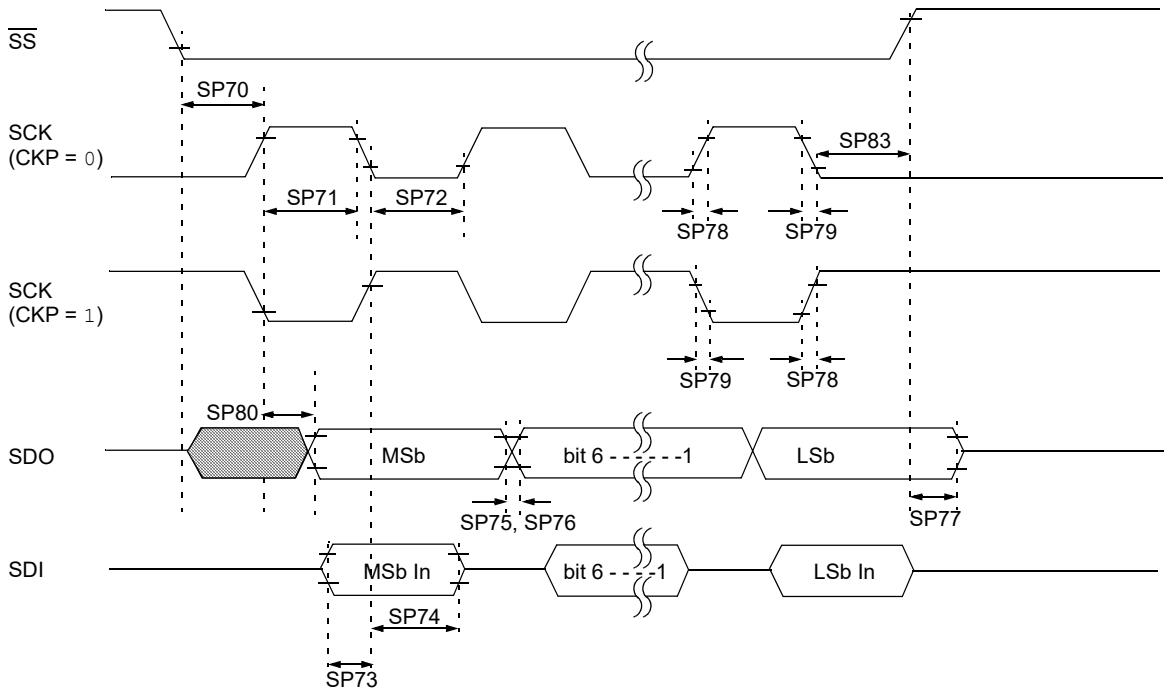

Note: Refer to Figure 37-4 for load conditions.

FIGURE 37-20: SPI CLIENT MODE TIMING (CKE = 1)

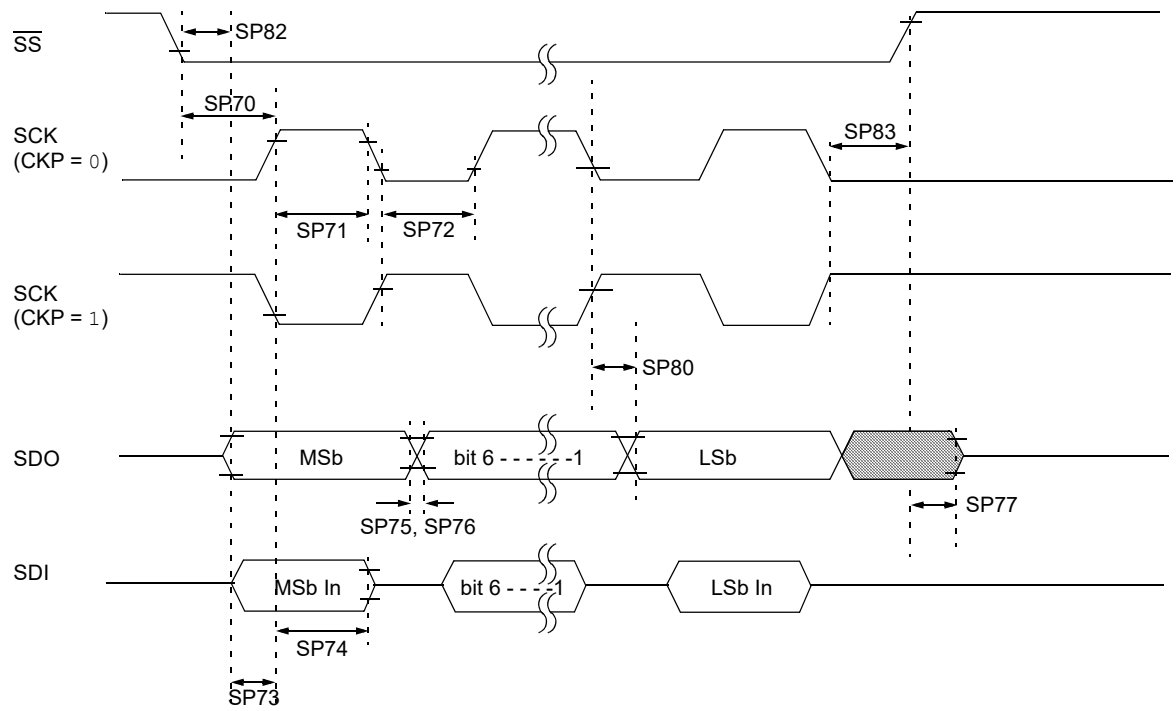

Note: Refer to Figure 37-4 for load conditions.

TABLE 37-23: SPI MODE REQUIREMENTS

Standard Operating Conditions (unless otherwise stated)							
Param. No.	**Symbol**	**Characteristic**	**Min.**	**Typ†**	**Max.**	**Units**	**Conditions**
SP70*	TssL2scH, TssL2scL	$\overline{SS}$↓ to SCK↓ or SCK↑ input	2.25*Tcy	—	—	ns	
SP71*	TscH	SCK input high time (Client mode)	Tcy + 20	—	—	ns	
SP72*	TscL	SCK input low time (Client mode)	Tcy + 20	—	—	ns	
SP73*	TdiV2scH, TdiV2scL	Setup time of SDI data input to SCK edge	100	—	—	ns	
SP74*	TscH2diL, TscL2diL	Hold time of SDI data input to SCK edge	100	—	—	ns	
SP75*	TdoR	SDO data output rise time	—	10	25	ns	3.0V ≤ VDD ≤ 5.5V
			—	25	50	ns	1.8V ≤ VDD ≤ 5.5V
SP76*	TdoF	SDO data output fall time	—	10	25	ns	
SP77*	TssH2doZ	$\overline{SS}$↑ to SDO output high-impedance	10	—	50	ns	
SP78*	TscR	SCK output rise time (Host mode)	—	10	25	ns	3.0V ≤ VDD ≤ 5.5V
			—	25	50	ns	1.8V ≤ VDD ≤ 5.5V
SP79*	TscF	SCK output fall time (Host mode)	—	10	25	ns	
SP80*	TscH2doV, TscL2doV	SDO data output valid after SCK edge	—	—	50	ns	3.0V ≤ VDD ≤ 5.5V
			—	—	145	ns	1.8V ≤ VDD ≤ 5.5V
SP81*	TdoV2scH, TdoV2scL	SDO data output setup to SCK edge	1 Tcy	—	—	ns	
SP82*	TssL2doV	SDO data output valid after $\overline{SS}$↓ edge	—	—	50	ns	
SP83*	TscH2ssH, TscL2ssH	$\overline{SS}$ ↑ after SCK edge	1.5 Tcy + 40	—	—	ns	

* These parameters are characterized but not tested.

† Data in “Typ” column is at 3.0V, 25°C unless otherwise stated. These parameters are for design guidance only and are not tested.

FIGURE 37-21: I²C BUS START/STOP BITS TIMING

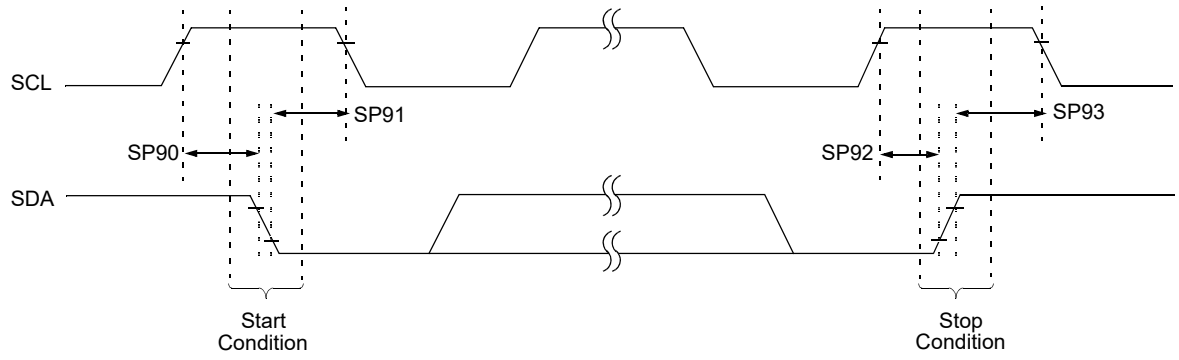

Note: Refer to Figure 37-4 for load conditions.

TABLE 37-24: I²C BUS START/STOP BITS REQUIREMENTS

Standard Operating Conditions (unless otherwise stated)								
Param. No.	**Symbol**	**Characteristic**		**Min.**	**Typ**	**Max.**	**Units**	**Conditions**
SP90*	TSU:STA	Start condition Setup time	100 kHz mode	4700	—	—	ns	Only relevant for Repeated Start condition
			400 kHz mode	600	—	—		
SP91*	THD:STA	Start condition Hold time	100 kHz mode	4000	—	—	ns	After this period, the first clock pulse is generated
			400 kHz mode	600	—	—		
SP92*	TSU:STO	Stop condition Setup time	100 kHz mode	4700	—	—	ns	
			400 kHz mode	600	—	—		
SP93	THD:STO	Stop condition Hold time	100 kHz mode	4000	—	—	ns	
			400 kHz mode	600	—	—		

* These parameters are characterized but not tested.

FIGURE 37-22: I²C BUS DATA TIMING

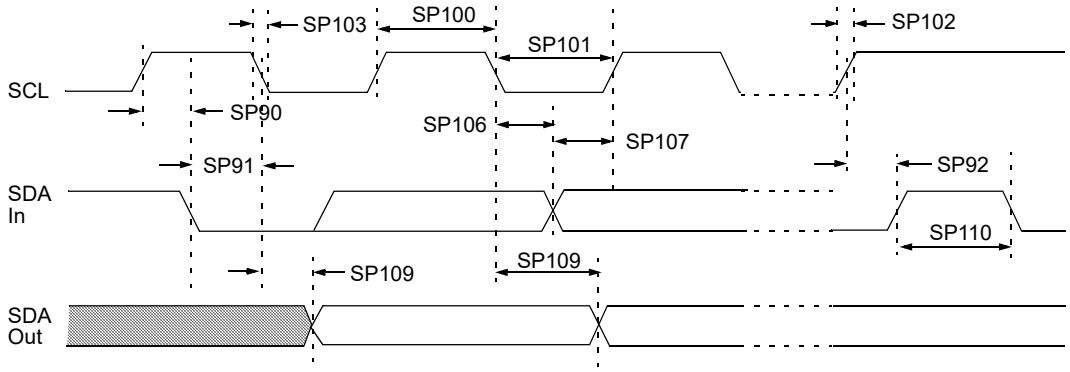

Note: Refer to Figure 37-4 for load conditions.

TABLE 37-25: I²C BUS DATA REQUIREMENTS

Standard Operating Conditions (unless otherwise stated)							
Param. No.	**Symbol**	**Characteristic**		**Min.**	**Max.**	**Units**	**Conditions**
SP100*	THIGH	Clock high time	100 kHz mode	4.0	—	μs	Device must operate at a minimum of 1.5 MHz
			400 kHz mode	0.6	—	μs	Device must operate at a minimum of 10 MHz
			SSP module	1.5TCY	—		
SP101*	TLOW	Clock low time	100 kHz mode	4.7	—	μs	Device must operate at a minimum of 1.5 MHz
			400 kHz mode	1.3	—	μs	Device must operate at a minimum of 10 MHz
			SSP module	1.5TCY	—		
SP102*	TR	SDA and SCL rise time	100 kHz mode	—	1000	ns	
			400 kHz mode	20 + 0.1CB	300	ns	CB is specified to be from 10-400 pF
SP103*	TF	SDA and SCL fall time	100 kHz mode	—	250	ns	
			400 kHz mode	20 + 0.1CB	250	ns	CB is specified to be from 10-400 pF
SP106*	THD:DAT	Data input hold time	100 kHz mode	0	—	ns	
			400 kHz mode	0	0.9	μs	
SP107*	TSU:DAT	Data input setup time	100 kHz mode	250	—	ns	**(Note 2)**
			400 kHz mode	100	—	ns	
SP109*	TAA	Output valid from clock	100 kHz mode	—	3500	ns	**(Note 1)**
			400 kHz mode	—	—	ns	
SP110*	TBUF	Bus free time	100 kHz mode	4.7	—	μs	Time the bus must be free before a new transmission can start
			400 kHz mode	1.3	—	μs	
SP111	CB	Bus capacitive loading		—	400	pF	

* These parameters are characterized but not tested.

Note 1: As a transmitter, the device must provide this internal minimum delay time to bridge the undefined region (min. 300 ns) of the falling edge of SCL to avoid unintended generation of Start or Stop conditions.

2: A Fast mode (400 kHz) I²C bus device can be used in a Standard mode (100 kHz) I²C bus system, but the requirement TSU:DAT ≥ 250 ns must then be met. This will automatically be the case if the device does not stretch the low period of the SCL signal. If such a device does stretch the low period of the SCL signal, it must output the next data bit to the SDA line TR max. + TSU:DAT = 1000 + 250 = 1250 ns (according to the Standard mode I²C bus specification), before the SCL line is released.

TABLE 37-26: TEMPERATURE INDICATOR REQUIREMENTS

Standard Operating Conditions (unless otherwise stated)								
Param No.	**Symbol**	**Characteristic**		**Min.**	**Typ†**	**Max.**	**Units**	**Conditions**
TS01	TACQMIN	Minimum ADC Acquisition Time Delay		—	25	—	μs	
TS02	MV	Voltage Sensitivity	High Range	—	-3.684	—	mV/°C	TSRNG = 1
			Low Range	—	-2.456	—	mV/°C	TSRNG = 0

* These parameters are characterized but not tested.

† Data in “Typ” column is at 3.0V, 25°C unless otherwise stated. These parameters are for design guidance only and are not tested.

38.0 DC AND AC CHARACTERISTICS GRAPHS AND CHARTS

The graphs and tables provided in this section are for **design guidance** and are **not tested**.

In some graphs or tables, the data presented are **outside specified operating range** (i.e., outside specified V_{DD} range). This is for **information only** and devices are ensured to operate properly only within the specified range.

Unless otherwise noted, all graphs apply to both the L and LF devices.

Note:	The graphs and tables provided following this note are a statistical summary based on a limited number of samples and are provided for informational purposes only. The performance characteristics listed herein are not tested or guaranteed. In some graphs or tables, the data presented may be outside the specified operating range (e.g., outside specified power supply range) and therefore, outside the warranted range.

"Typical" represents the mean of the distribution at 25°C. "Maximum", "Max.", "Minimum" or "Min." represents (mean + 3σ) or (mean - 3σ) respectively, where σ is a standard deviation, over each temperature range.

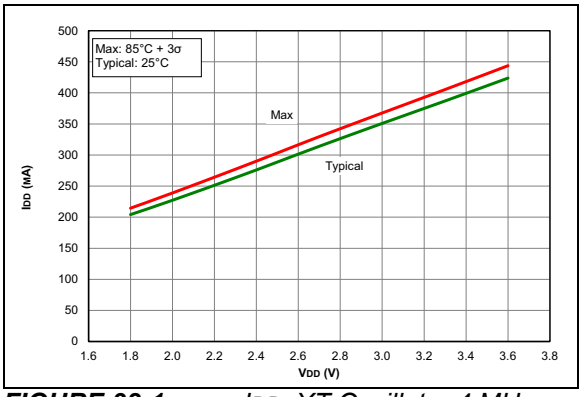

FIGURE 38-1: *IDD, XT Oscillator 4 MHz, PIC16LF15324/44 Only.*

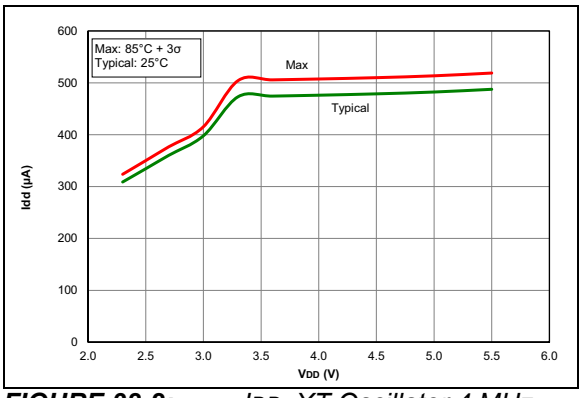

FIGURE 38-2: *IDD, XT Oscillator 4 MHz, PIC16F15324/44 Only.*

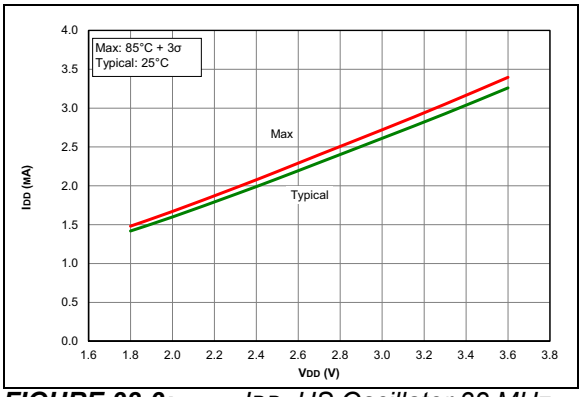

FIGURE 38-3: *IDD, HS Oscillator 32 MHz, PIC16LF15324/44 Only.*

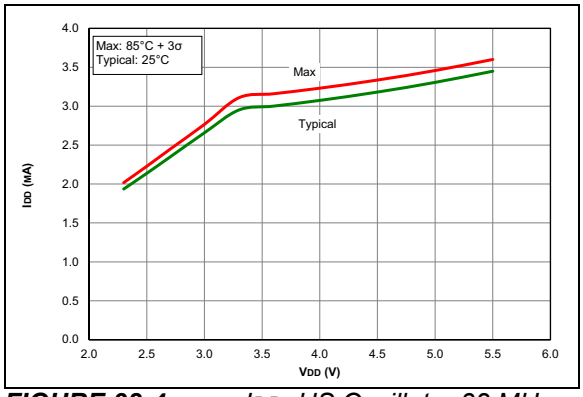

FIGURE 38-4: *IDD, HS Oscillator 32 MHz, PIC16F15324/44 Only.*

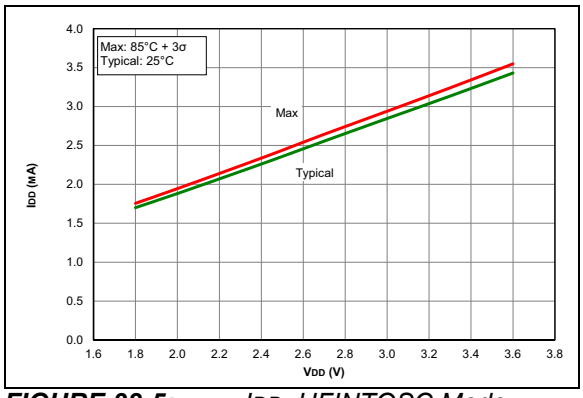

FIGURE 38-5: *IDD, HFINTOSC Mode, FOSC = 32 MHz, PIC16LF15324/44 Only.*

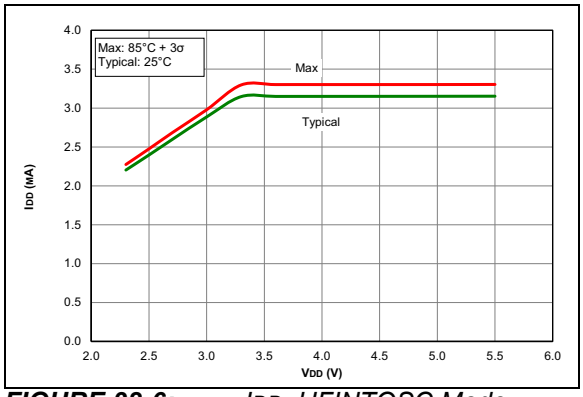

FIGURE 38-6: *IDD, HFINTOSC Mode, FOSC = 32 MHz, PIC16F15324/44 Only.*

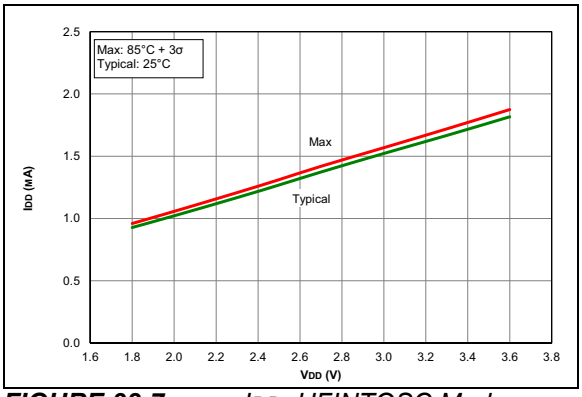

FIGURE 38-7: *IDD, HFINTOSC Mode, FOSC = 16 MHz, PIC16LF15324/44 Only.*

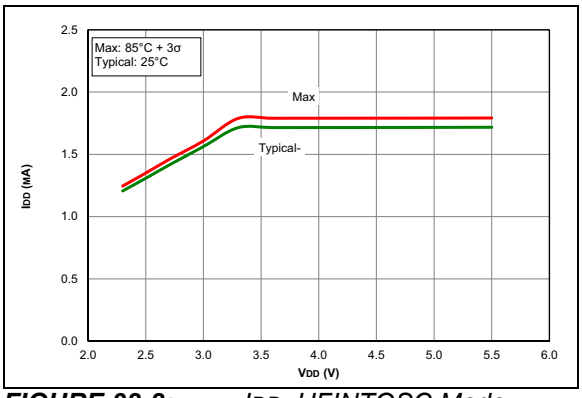

FIGURE 38-8: *IDD, HFINTOSC Mode, FOSC = 16 MHz, PIC16F15324/44 Only.*

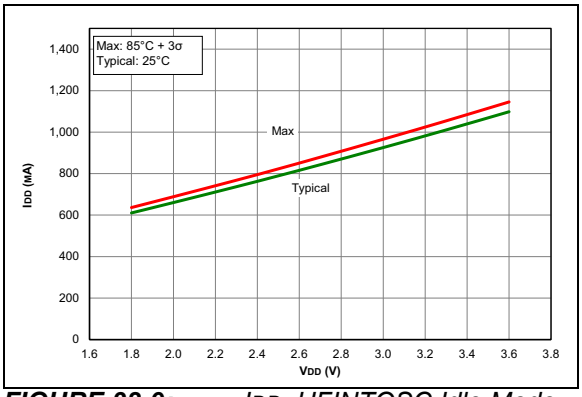

FIGURE 38-9: *IDD, HFINTOSC Idle Mode, FOSC = 16 MHz, PIC16LF15324/44 Only.*

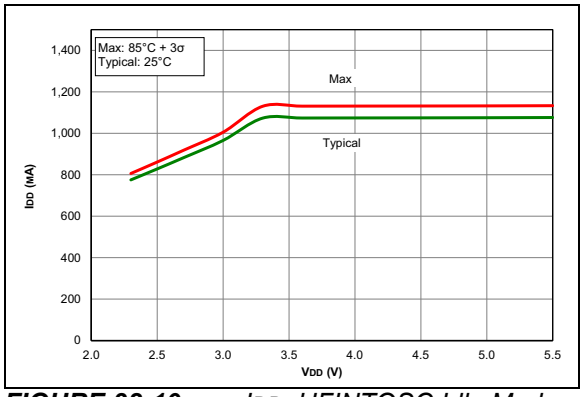

FIGURE 38-10: *IDD, HFINTOSC Idle Mode, FOSC = 16 MHz, PIC16F15324/44 Only.*

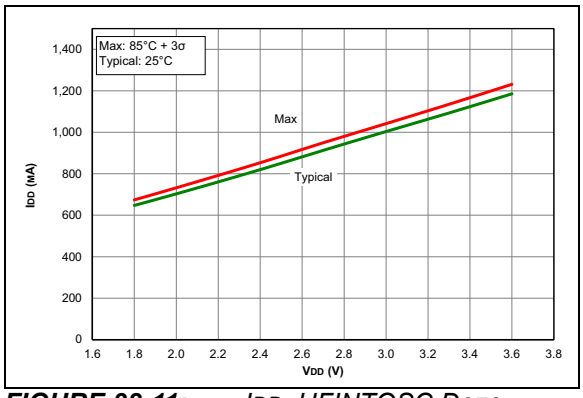

FIGURE 38-11: *IDD, HFINTOSC Doze Mode, FOSC = 16 MHz, PIC16LF15324/44 Only.*

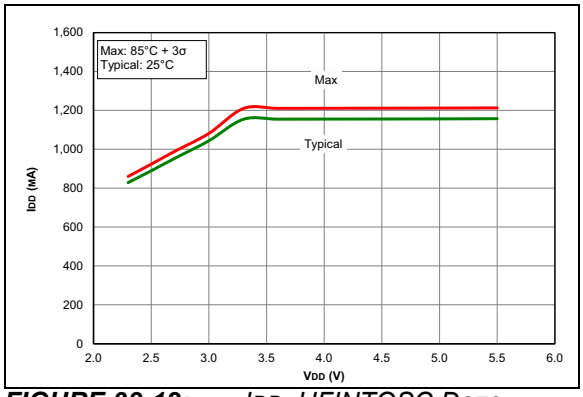

FIGURE 38-12: *IDD, HFINTOSC Doze Mode, FOSC = 16 MHz, PIC16F15324/44 Only.*

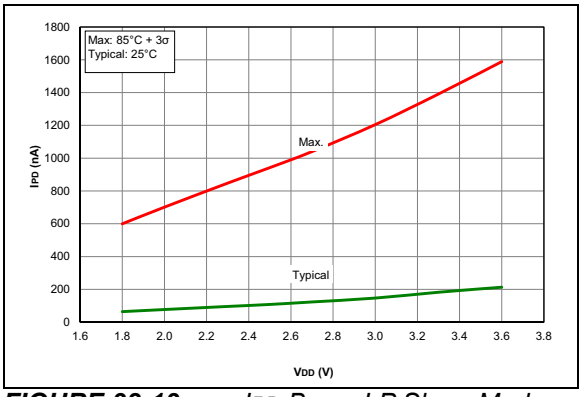

FIGURE 38-13: *IPD Base, LP Sleep Mode, PIC16LF15324/44 Only.*

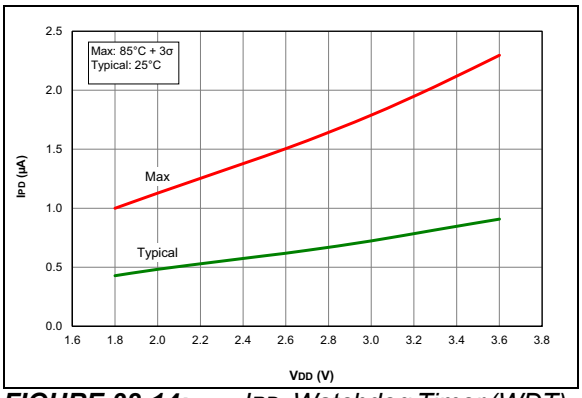

FIGURE 38-14: *IPD, Watchdog Timer (WDT), PIC16LF15324/44 Only.*

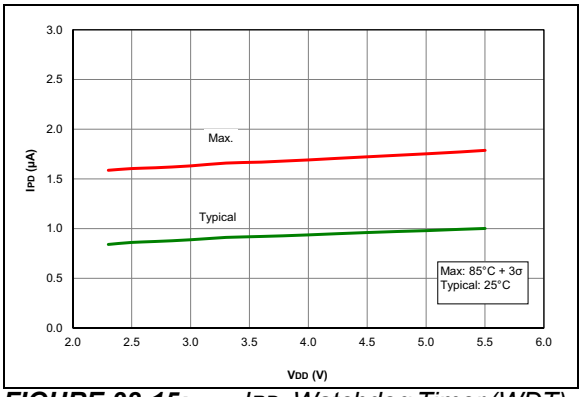

FIGURE 38-15: *IPD, Watchdog Timer (WDT), PIC16F15324/44 Only.*

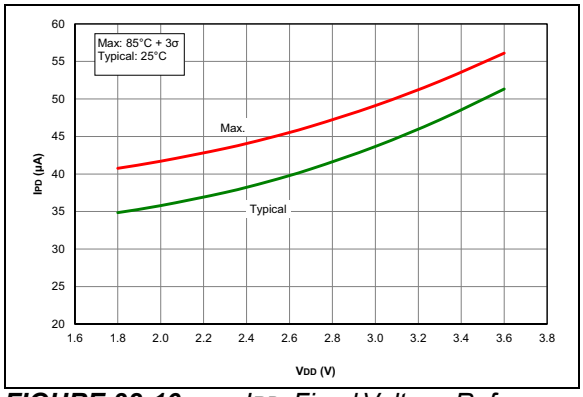

FIGURE 38-16: *IPD, Fixed Voltage Reference (FVR), PIC16LF15324/44 Only.*

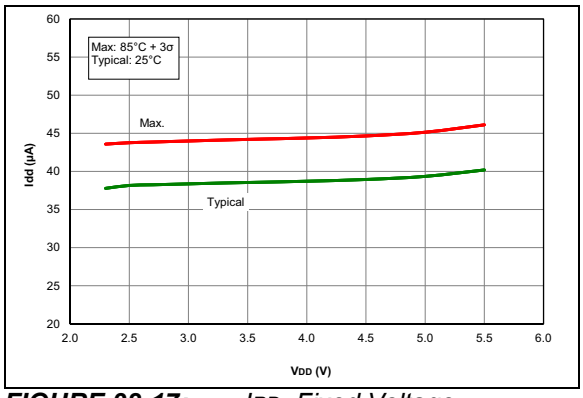

FIGURE 38-17: *IPD, Fixed Voltage Reference (FVR), PIC16F15324/44 Only.*

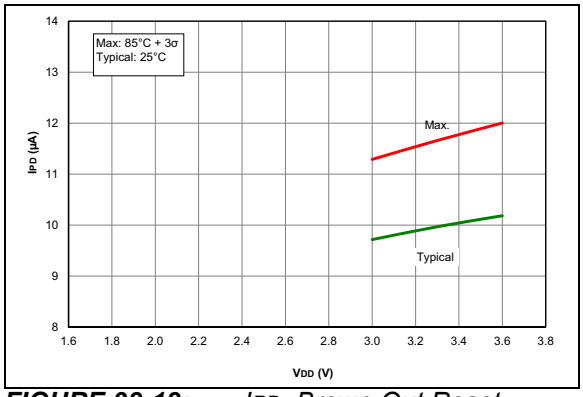

FIGURE 38-18: *IPD, Brown-Out Reset (BOR), BORV = 1, PIC16LF15324/44 Only.*

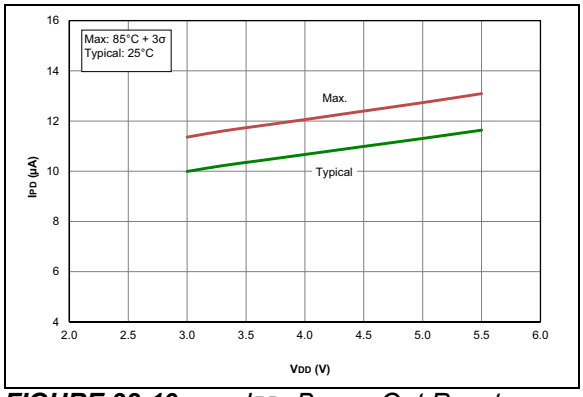

FIGURE 38-19: *IPD, Brown-Out Reset (BOR), BORV = 1, PIC16F15324/44 Only.*

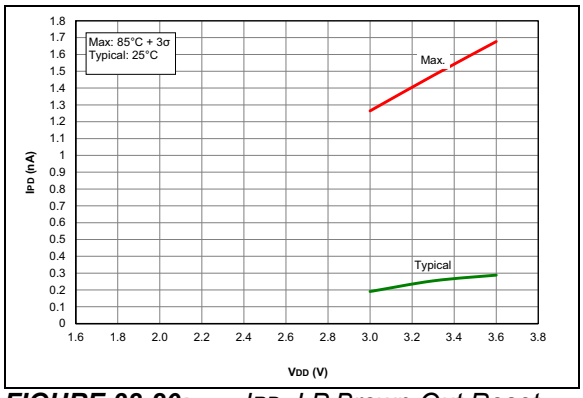

FIGURE 38-20: *IPD, LP Brown-Out Reset (LPBOR = 0), PIC16LF15324/44 Only.*

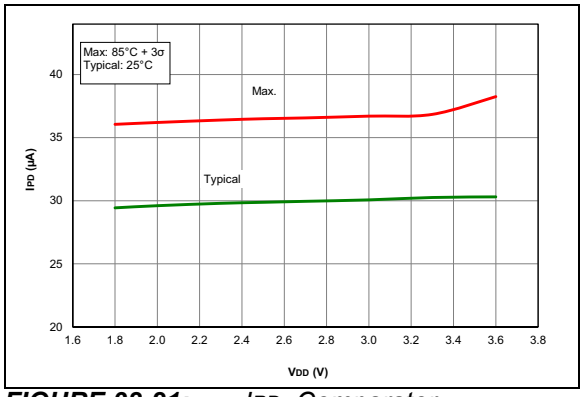

FIGURE 38-21: *IPD, Comparator, PIC16LF15324/44 Only.*

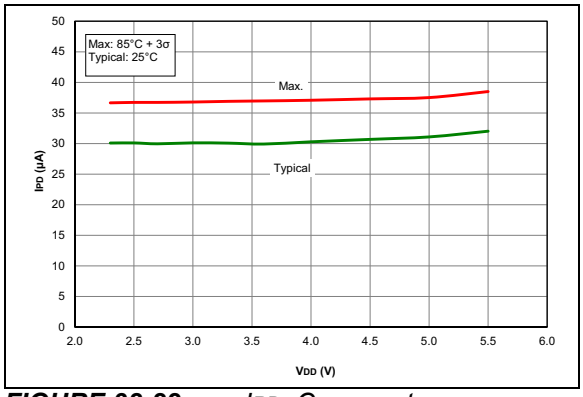

FIGURE 38-22: *IPD, Comparator, PIC16F15324/44 Only.*

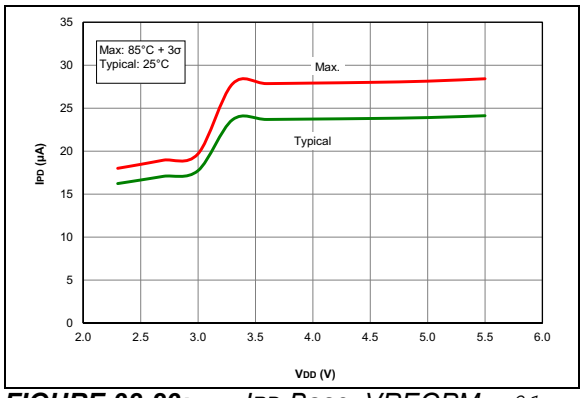

FIGURE 38-23: *IPD Base, VREGPM = 01, PIC16F15324/44 Only.*

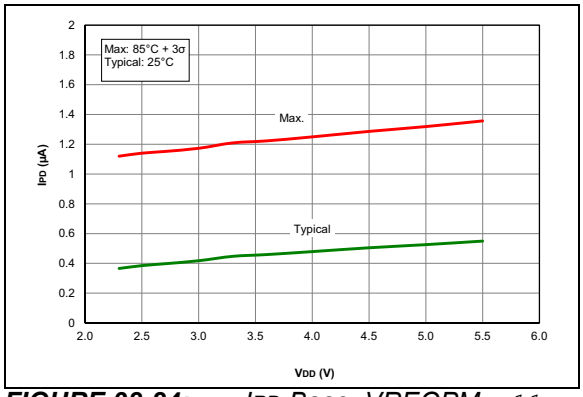

FIGURE 38-24: *IPD Base, VREGPM = 11, PIC16F15324/44 Only.*

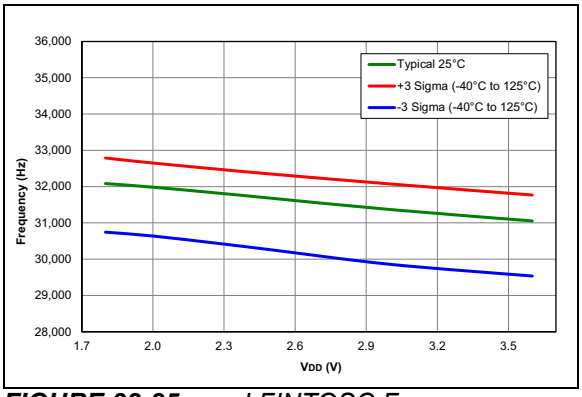

FIGURE 38-25: *LFINTOSC Frequency, PIC16LF15324/44 Only.*

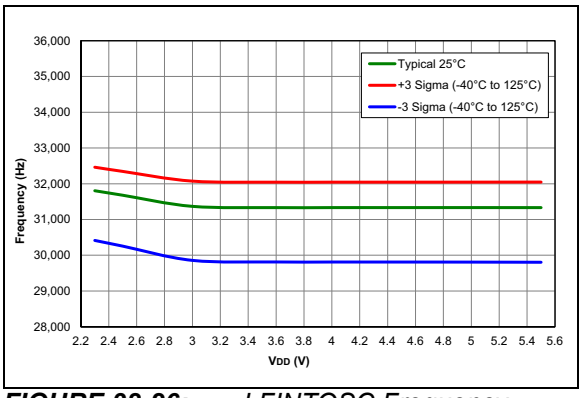

FIGURE 38-26: *LFINTOSC Frequency, PIC16F15324/44 Only.*

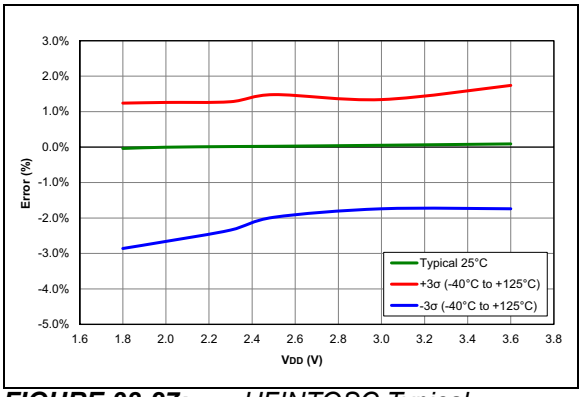

FIGURE 38-27: *HFINTOSC Typical, Frequency Error, PIC16LF15324/44 Only.*

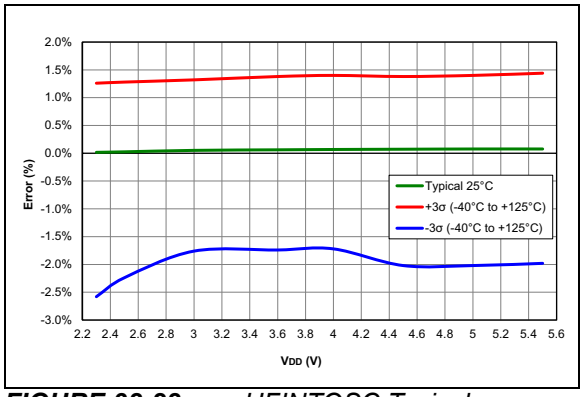

FIGURE 38-28: *HFINTOSC Typical, Frequency Error, PIC16F15324/44 Only.*

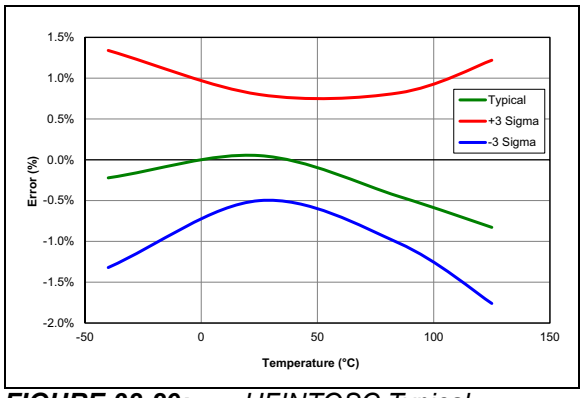

FIGURE 38-29: *HFINTOSC Typical, Frequency Error, VDD = 3.0V.*

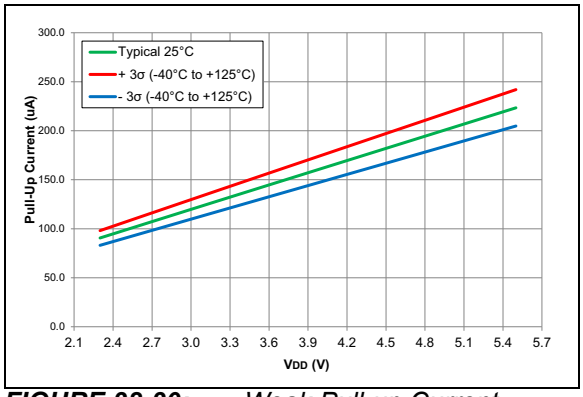

FIGURE 38-30: *Weak Pull-up Current, PIC16F15324/44 Only.*

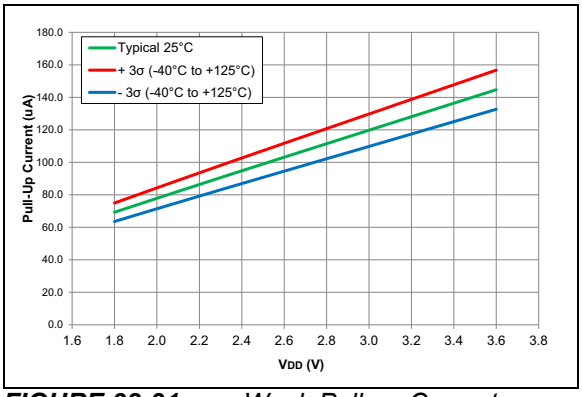

FIGURE 38-31: *Weak Pull-up Current, PIC16LF15324/44 Only.*

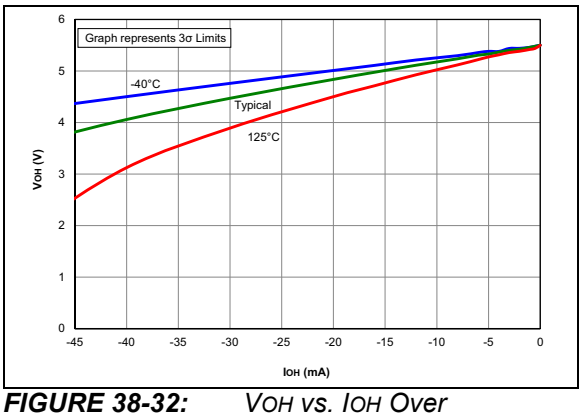

FIGURE 38-32: *VOH vs. IOH Over Temperature, VDD = 5.5V, PIC16F15324/44 Only.*

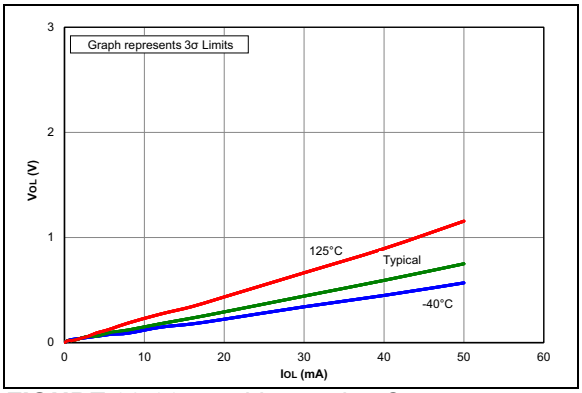

FIGURE 38-33: *VOL vs. IOL Over Temperature, VDD = 5.5V, PIC16F15324/44 Only.*

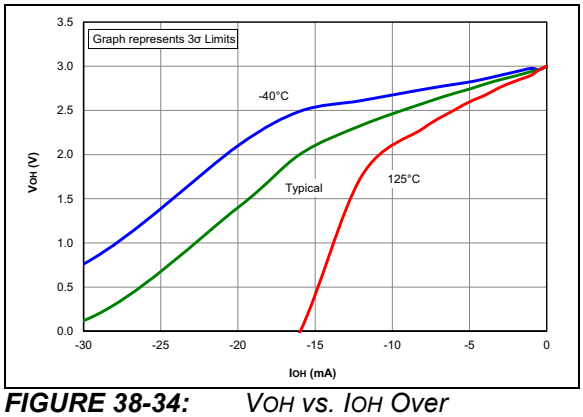

FIGURE 38-34: *VOH vs. IOH Over Temperature, VDD = 3.0V.*

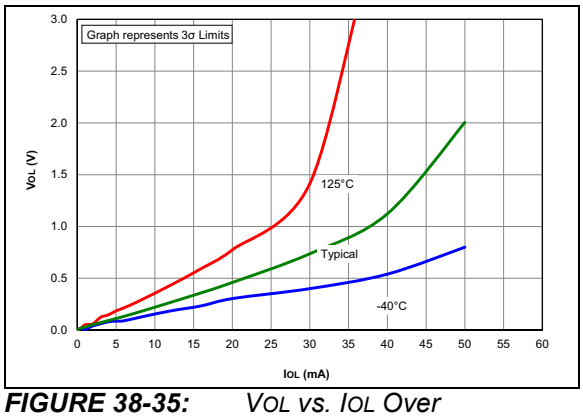

FIGURE 38-35: *VOL vs. IOL Over Temperature, VDD = 3.0V.*

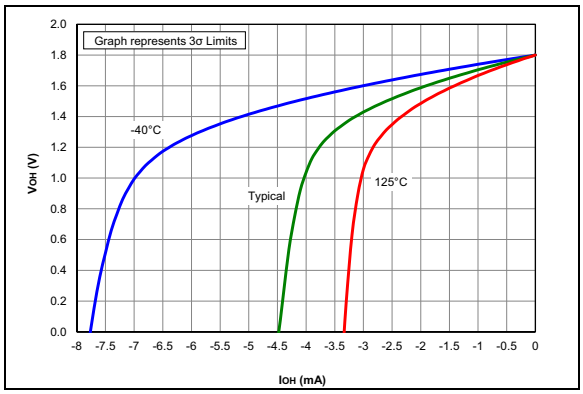

FIGURE 38-36: *VOH vs. IOH Over Temperature, VDD = 1.8V, PIC16LF15324/44 Only.*

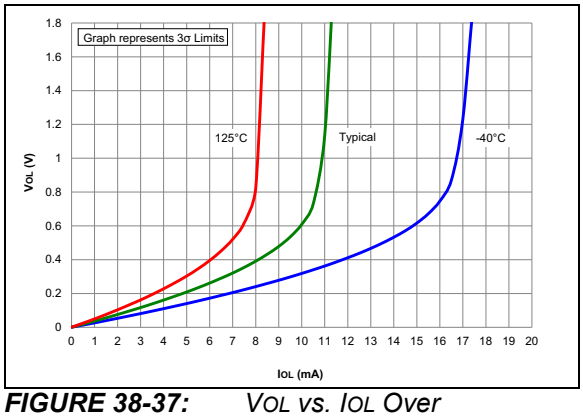

FIGURE 38-37: *VOL vs. IOL Over Temperature, VDD = 1.8V, PIC16LF15324/44 Only.*

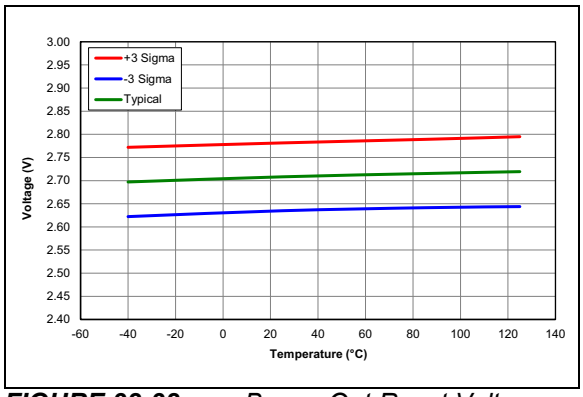

FIGURE 38-38: *Brown-Out Reset Voltage, Low Trip Point (BORV = 0).*

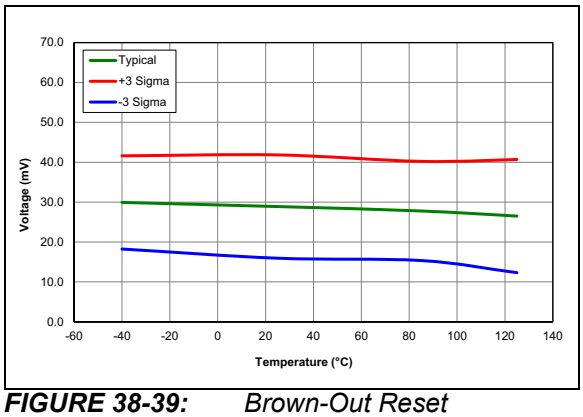

FIGURE 38-39: *Brown-Out Reset Hysteresis, Low Trip Point (BORV = 0).*

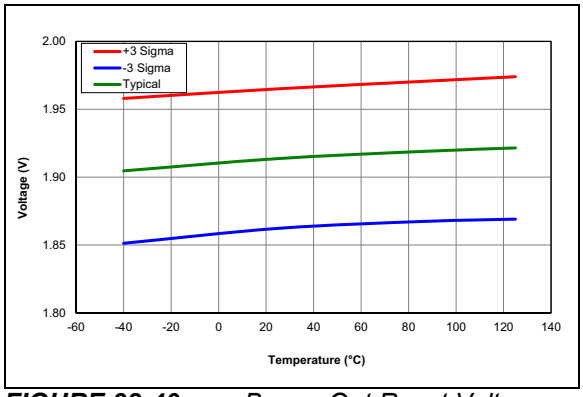

FIGURE 38-40: *Brown-Out Reset Voltage, Trip Point (BORV = 1), PIC16LF15324/44 Only.*

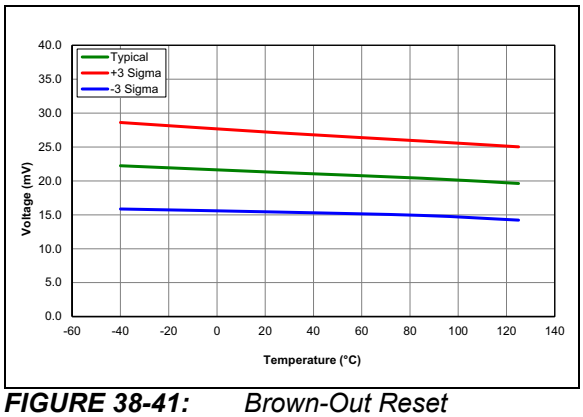

FIGURE 38-41: *Brown-Out Reset Hysteresis, Trip Point (BORV = 1), PIC16LF15324/44 Only.*

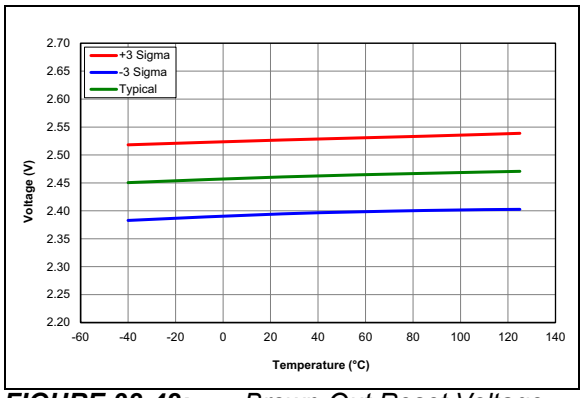

FIGURE 38-42: *Brown-Out Reset Voltage, Trip Point (BORV = 1), PIC16F15324/44 Only.*

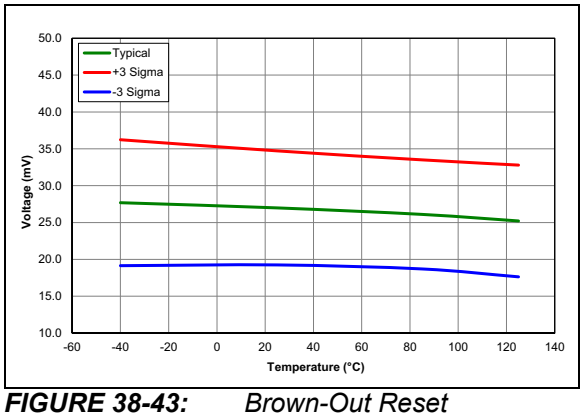

FIGURE 38-43: *Brown-Out Reset Hysteresis, Trip Point (BORV = 1), PIC16F15324/44 Only.*

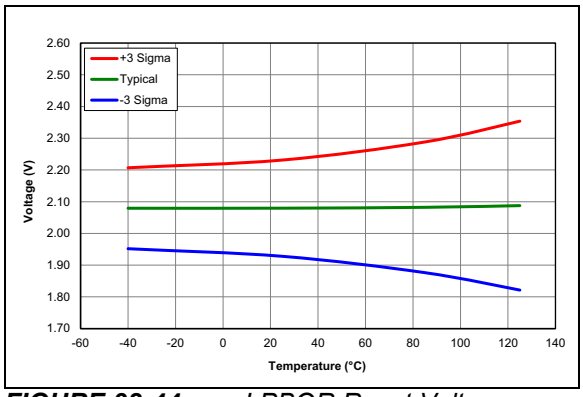

FIGURE 38-44: *LPBOR Reset Voltage.*

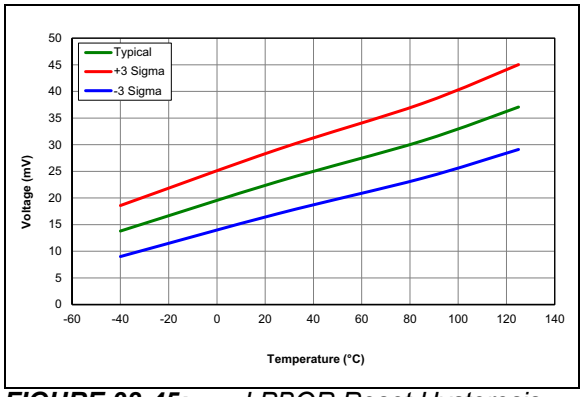

FIGURE 38-45: *LPBOR Reset Hysteresis.*

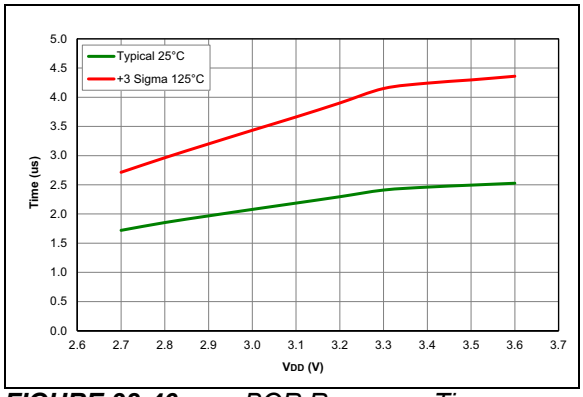

FIGURE 38-46: *BOR Response Time, PIC16LF15324/44 Only.*

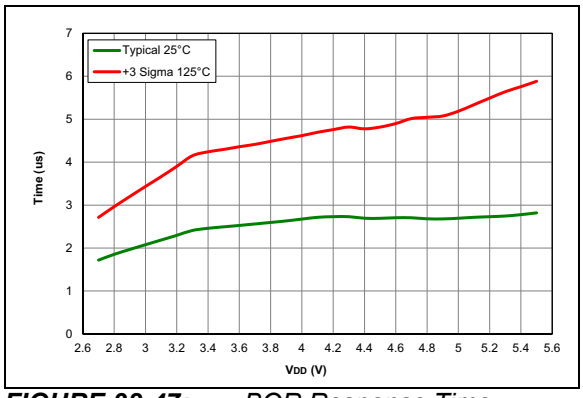

FIGURE 38-47: *BOR Response Time, PIC16F15324/44 Only.*

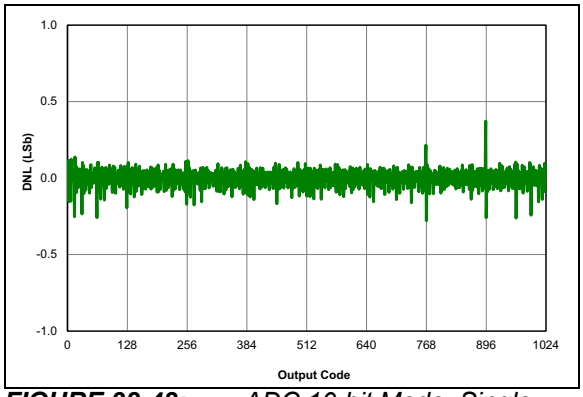

FIGURE 38-48: *ADC 10-bit Mode, Single-Ended DNL, V_{DD} = 3.0V, V_{REF} = 3.0V, T_{AD} = 1 μS, 25°C.*

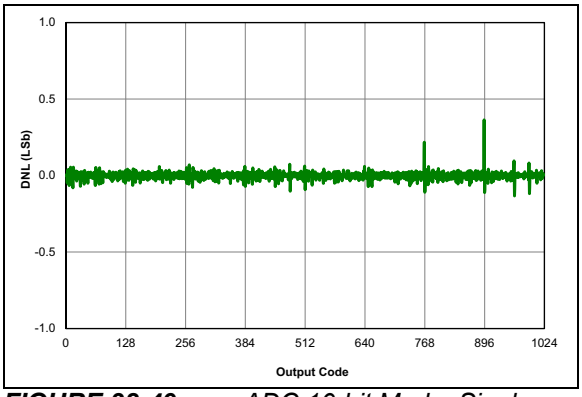

FIGURE 38-49: *ADC 10-bit Mode, Single-Ended DNL, V_{DD} = 3.0V, V_{REF} = 3.0V, T_{AD} = 4 μS, 25°C.*

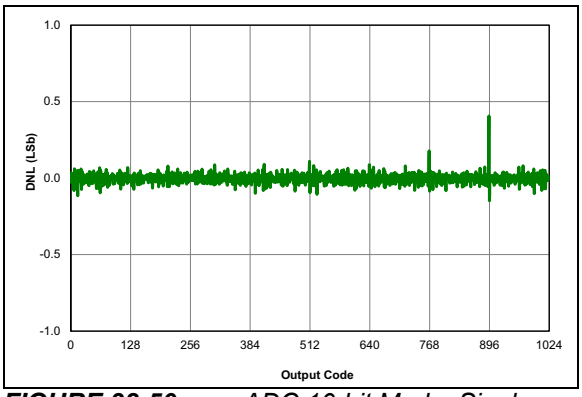

FIGURE 38-50: *ADC 10-bit Mode, Single-Ended DNL, V_{DD} = 3.0V, V_{REF} = 3.0V, T_{AD} = 8 μS, 25°C.*

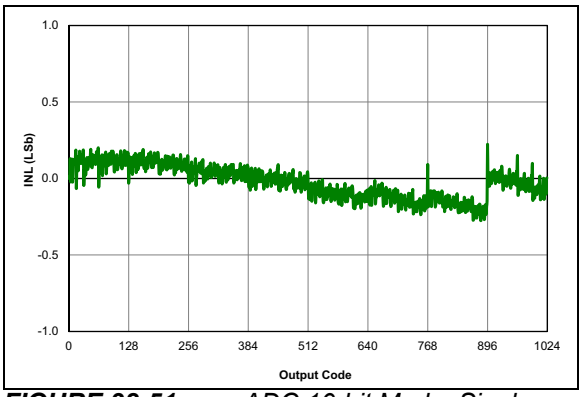

FIGURE 38-51: *ADC 10-bit Mode, Single-Ended INL, V_{DD} = 3.0V, V_{REF} = 3.0V, T_{AD} = 1 μS, 25°C.*

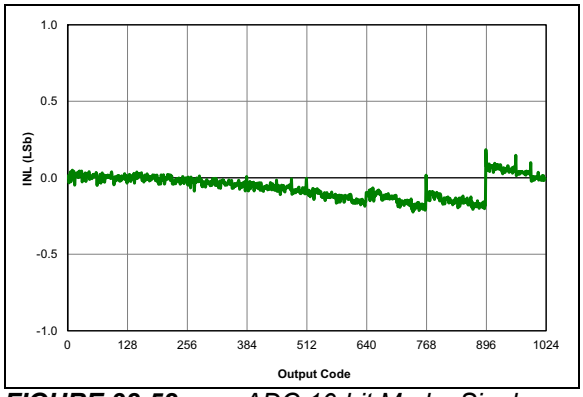

FIGURE 38-52: *ADC 10-bit Mode, Single-Ended INL, V_{DD} = 3.0V, V_{REF} = 3.0V, T_{AD} = 4 μS, 25°C.*

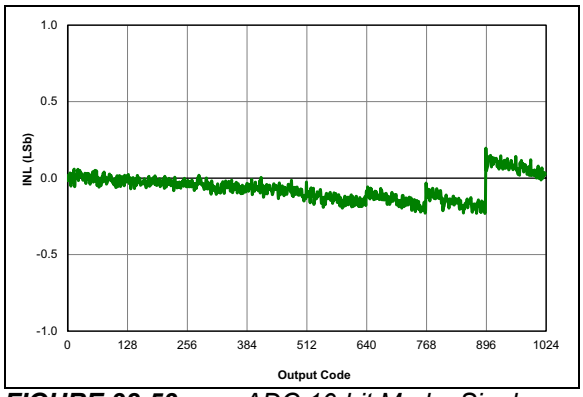

FIGURE 38-53: *ADC 10-bit Mode, Single-Ended INL, V_{DD} = 3.0V, V_{REF} = 3.0V, T_{AD} = 8 μS, 25°C.*

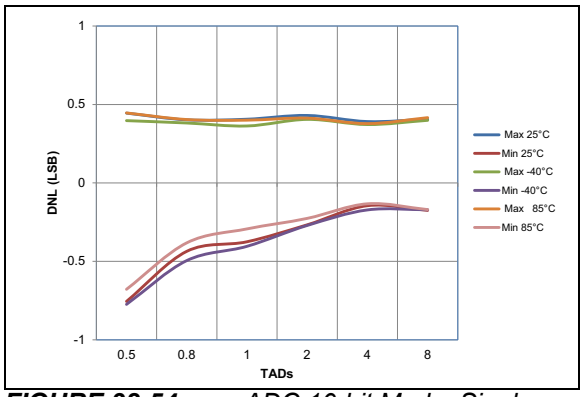

FIGURE 38-54: *ADC 10-bit Mode, Single-Ended DNL, V_{DD} = 3.0V, V_{REF} = 3.0V.*

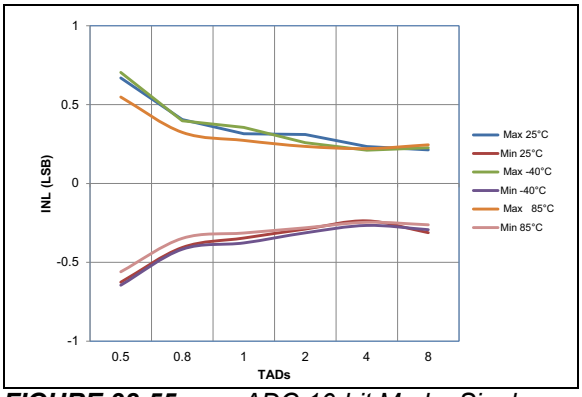

FIGURE 38-55: *ADC 10-bit Mode, Single-Ended INL, V_{DD} = 3.0V, V_{REF} = 3.0V.*

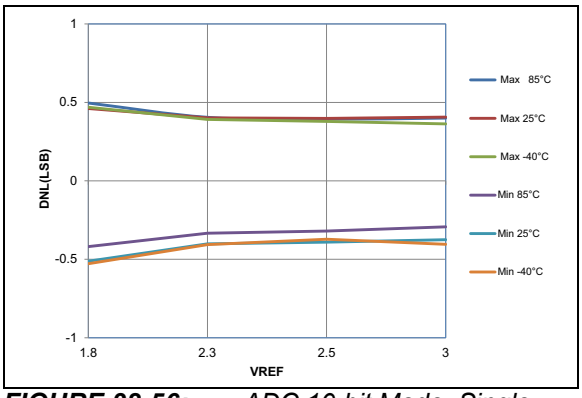

FIGURE 38-56: *ADC 10-bit Mode, Single-Ended DNL, V_{DD} = 3.0V, T_{AD} = 1 μS.*

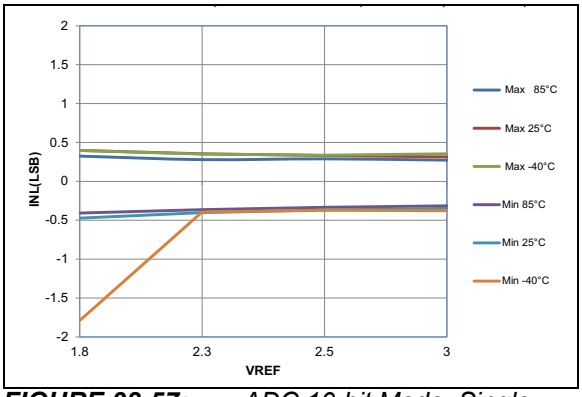

FIGURE 38-57: *ADC 10-bit Mode, Single-Ended INL, V_{DD} = 3.0V, T_{AD} = 1 μS.*

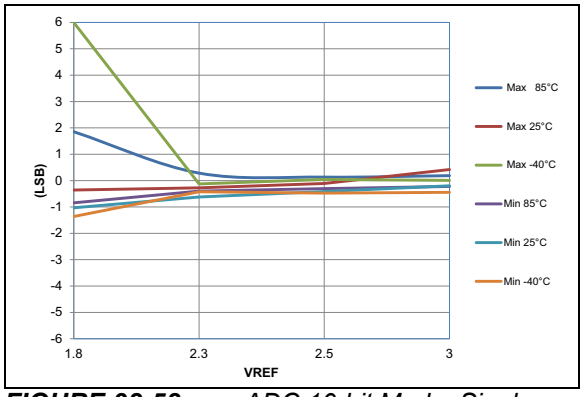

FIGURE 38-58: *ADC 10-bit Mode, Single-Ended Gain Error, V_{DD} = 3.0V, T_{AD} = 1 μS.*

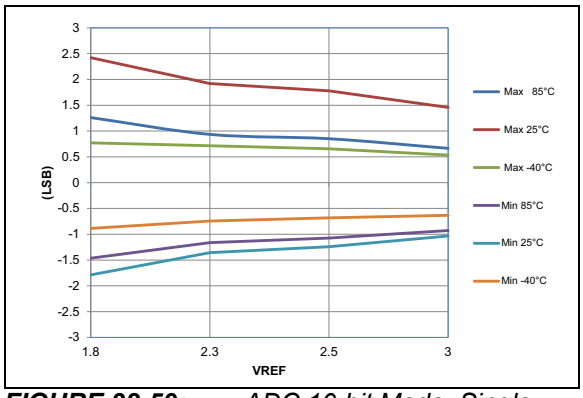

FIGURE 38-59: *ADC 10-bit Mode, Single-Ended Offset Error, V_{DD} = 3.0V, T_{AD} = 1 μS.*

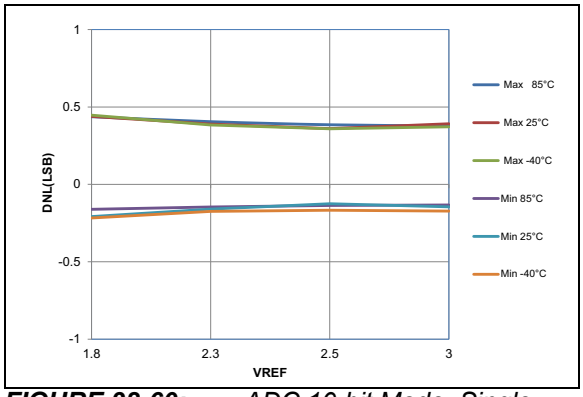

FIGURE 38-60: *ADC 10-bit Mode, Single-Ended DNL, V_{DD} = 3.0V, T_{AD} = 4 μS.*

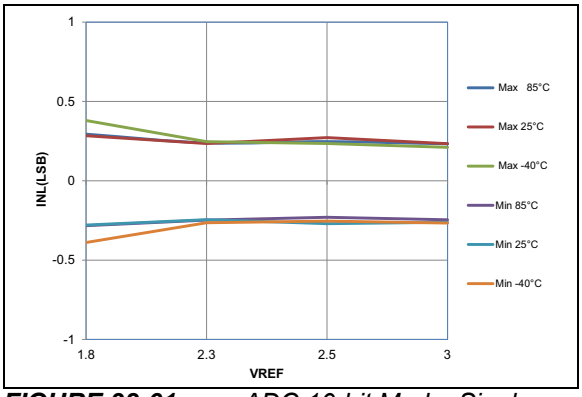

FIGURE 38-61: *ADC 10-bit Mode, Single-Ended INL, V_{DD} = 3.0V, T_{AD} = 4 μS.*

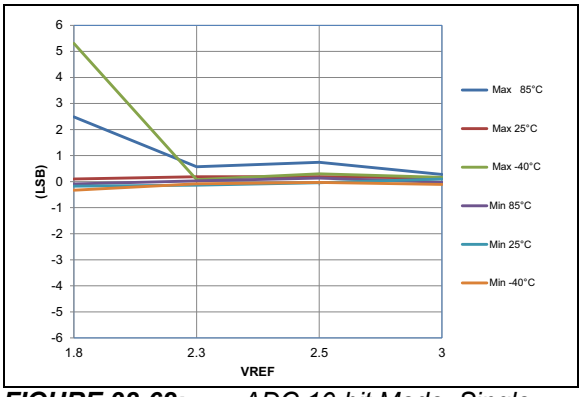

FIGURE 38-62: *ADC 10-bit Mode, Single-Ended Gain Error, V_{DD} = 3.0V, T_{AD} = 4 μS.*

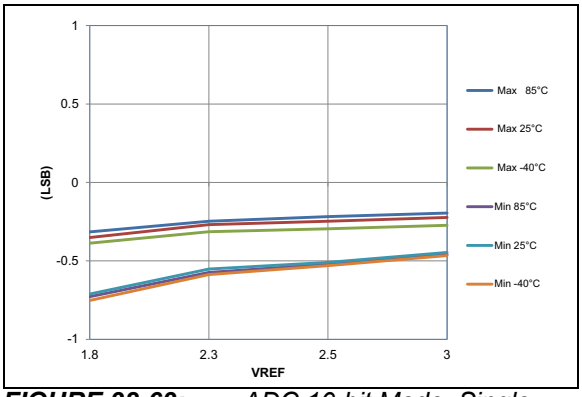

FIGURE 38-63: *ADC 10-bit Mode, Single-Ended Offset Error, V_{DD} = 3.0V, T_{AD} = 4 μS.*

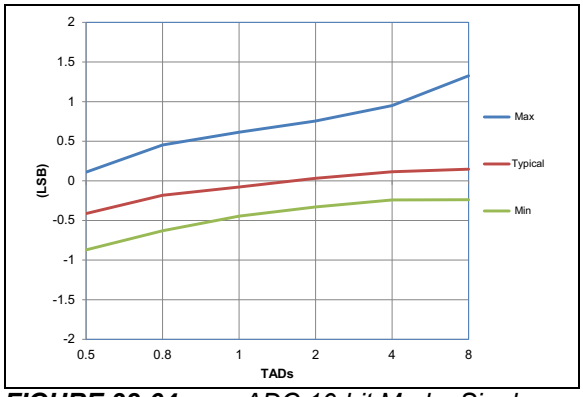

FIGURE 38-64: *ADC 10-bit Mode, Single-Ended Gain Error, V_{DD} = 3.0V, V_{REF} = 3.0V, -40°C to 85°C.*

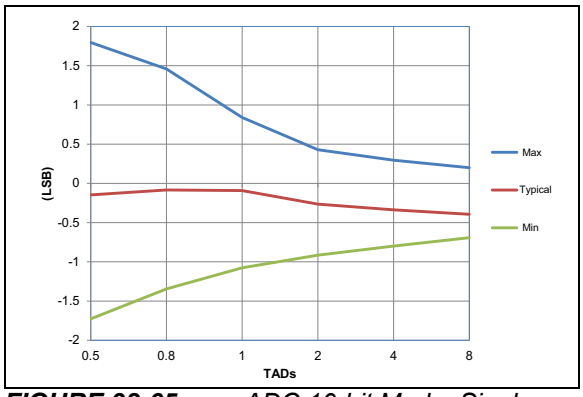

FIGURE 38-65: *ADC 10-bit Mode, Single-Ended Offset Error, V_{DD} = 3.0V, V_{REF} = 3.0V, -40°C to 85°C.*

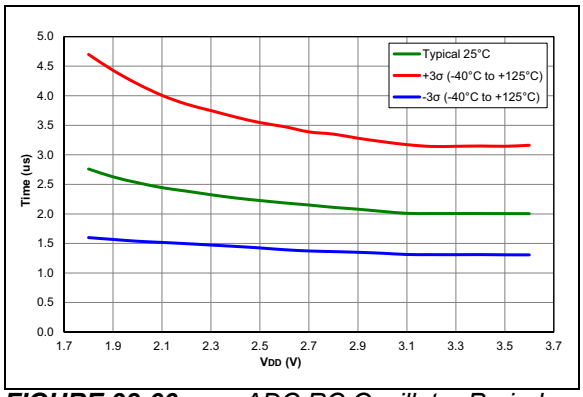

FIGURE 38-66: *ADC RC Oscillator Period, PIC16LF15324/44 Only.*

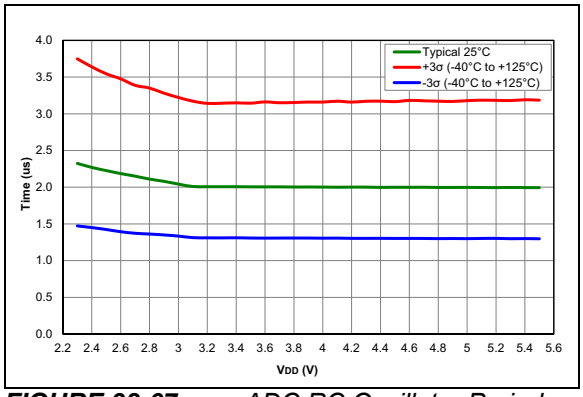

FIGURE 38-67: *ADC RC Oscillator Period, PIC16F15324/44 Only.*

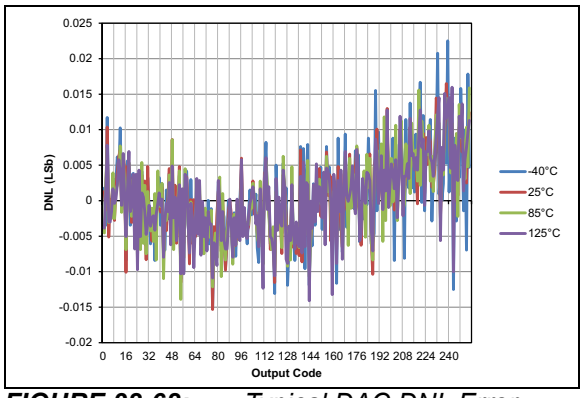

FIGURE 38-68: *Typical DAC DNL Error, VDD = 3.0V, VREF = External 3V.*

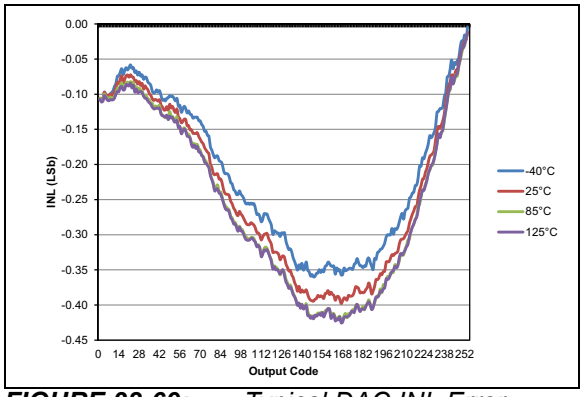

FIGURE 38-69: *Typical DAC INL Error, VDD = 3.0V, VREF = External 3V.*

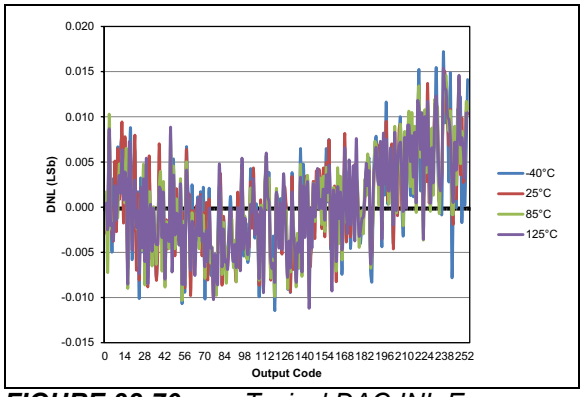

FIGURE 38-70: *Typical DAC INL Error, VDD = 5.0V, VREF = External 3V.*

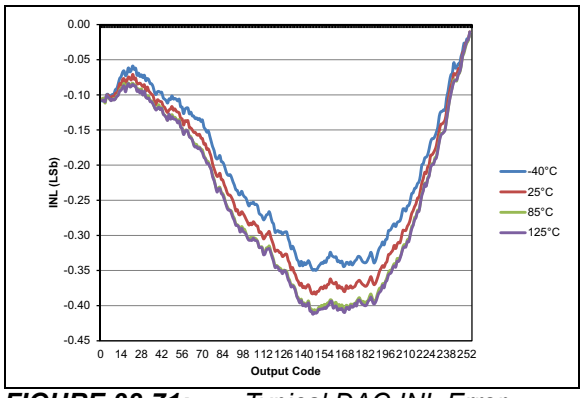

FIGURE 38-71: *Typical DAC INL Error, VDD = 5.0V, VREF = External 5V.*

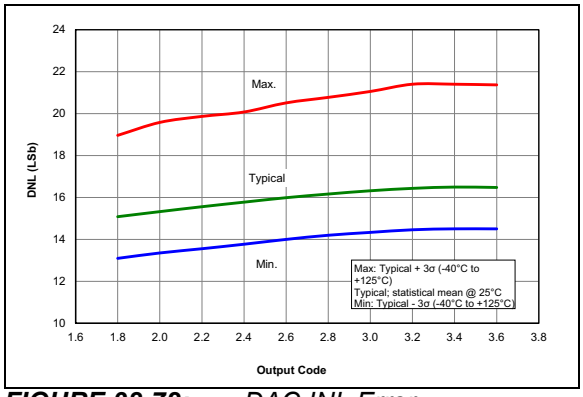

FIGURE 38-72: *DAC INL Error, VDD = 3.0V, PIC16LF15324/44 Only.*

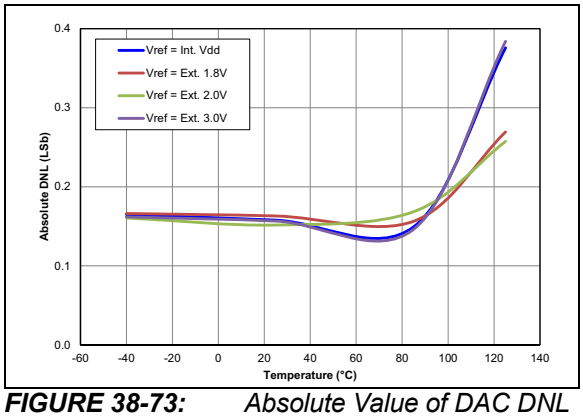

FIGURE 38-73: *Absolute Value of DAC DNL Error, VDD = 3.0V, VREF = VDD.*

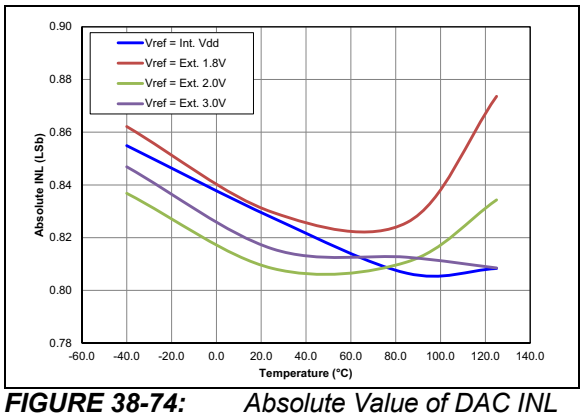

FIGURE 38-74: *Absolute Value of DAC INL Error, VDD = 3.0V, VREF = VDD.*

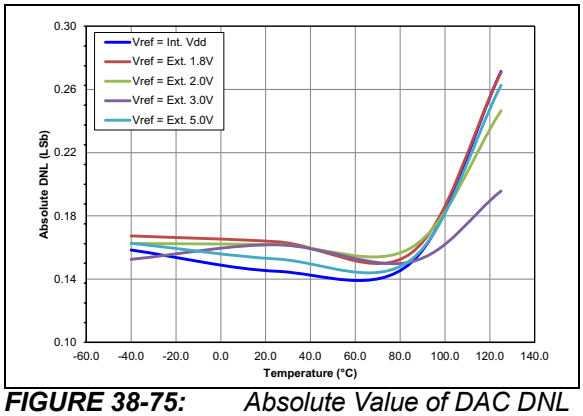

FIGURE 38-75: *Absolute Value of DAC DNL Error, VDD = 5.0V, VREF = VDD.*

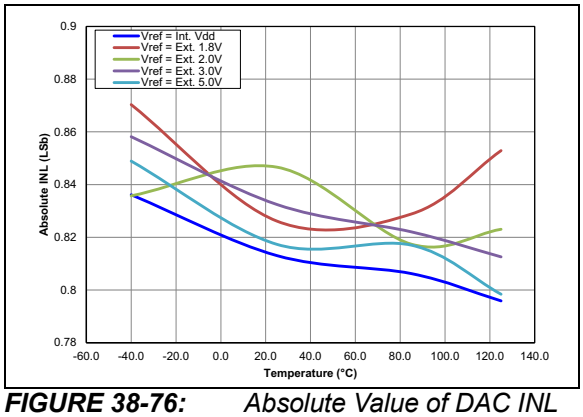

FIGURE 38-76: *Absolute Value of DAC INL Error, VDD = 5.0V, VREF = VDD.*

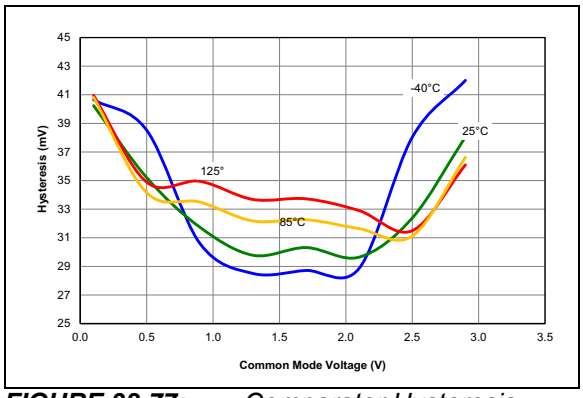

FIGURE 38-77: *Comparator Hysteresis, NP Mode (CxSP = 1), VDD = 3.0V, Typical Measured Values.*

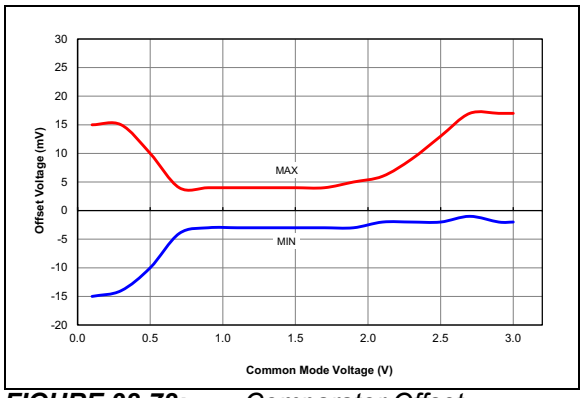

FIGURE 38-78: *Comparator Offset, NP Mode (CxSP = 1), VDD = 3.0V, Typical Measured Values at 25°C.*

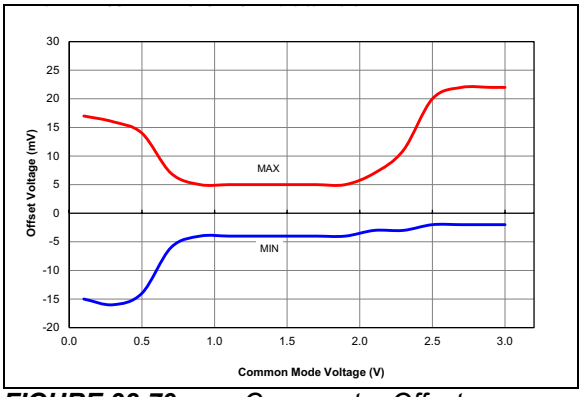

FIGURE 38-79: *Comparator Offset, NP Mode (CxSP = 1), VDD = 3.0V, Typical Measured Values from -40°C to 125°C.*

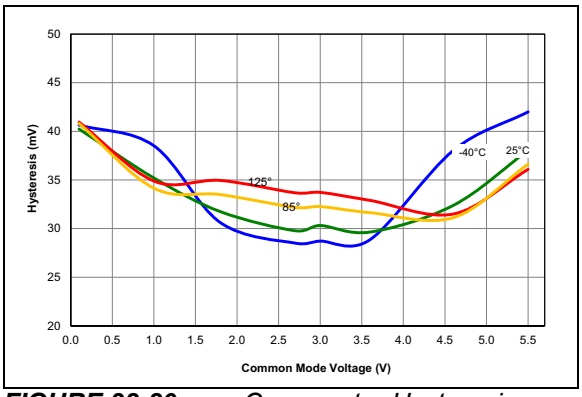

FIGURE 38-80: *Comparator Hysteresis, NP Mode (CxSP = 1), VDD = 5.5V, Typical Measured Values.*

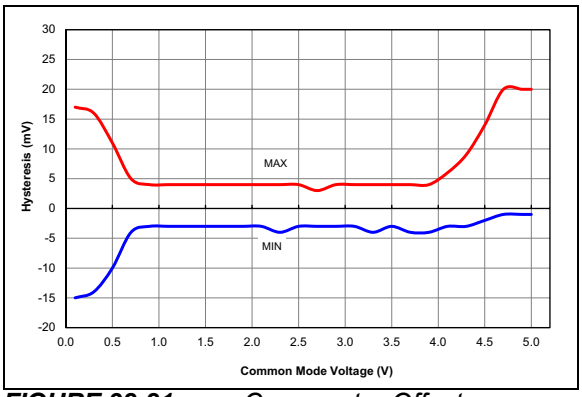

FIGURE 38-81: *Comparator Offset, NP Mode (CxSP = 1), VDD = 5.5V, Typical Measured Values at 25°C.*

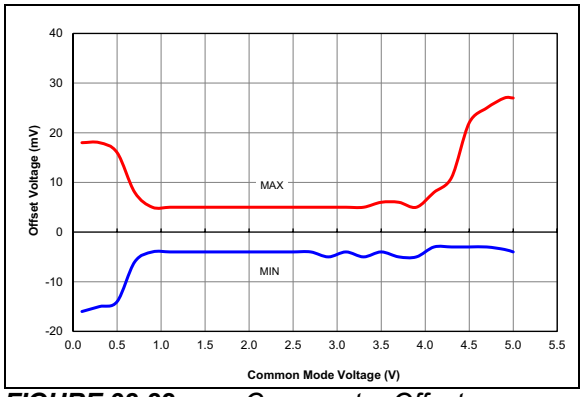

FIGURE 38-82: *Comparator Offset, NP Mode (CxSP = 1), VDD = 5.5V, Typical Measured Values from -40°C to 125°C.*

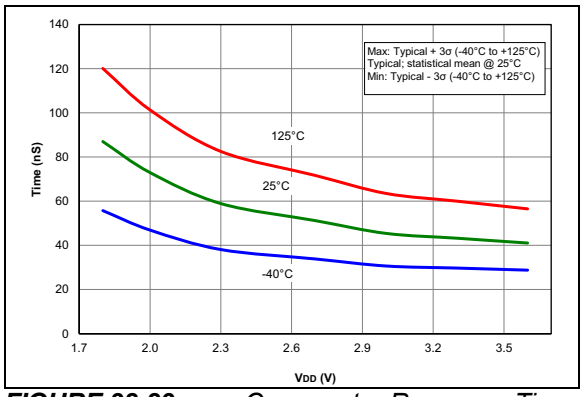

FIGURE 38-83: *Comparator Response Time Over Voltage, NP Mode (CxSP = 1), Typical Measured Values, PIC16LF15324/44 Only.*

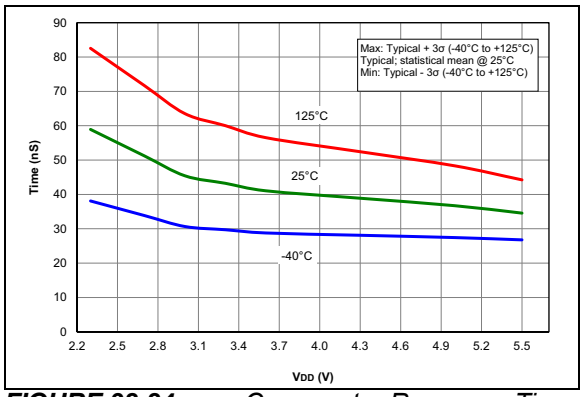

FIGURE 38-84: *Comparator Response Time Over Voltage, NP Mode (CxSP = 1), Typical Measured Values, PIC16F15324/44 Only.*

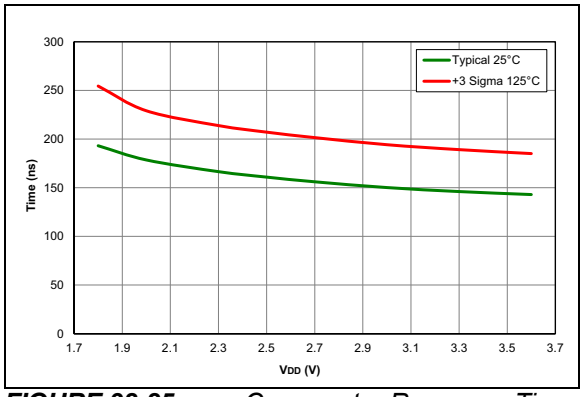

FIGURE 38-85: *Comparator Response Time Falling Edge, PIC16LF15324/44 Only.*

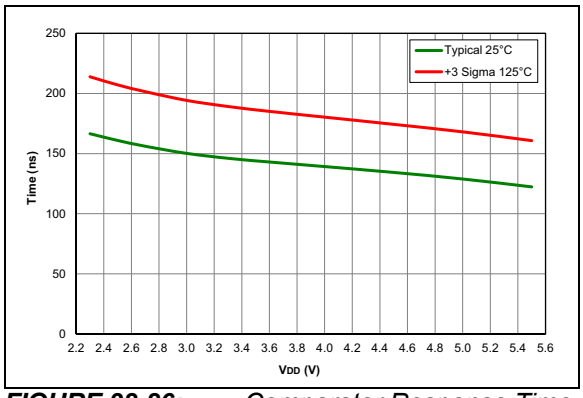

FIGURE 38-86: *Comparator Response Time Falling Edge, PIC16F15324/44 Only.*

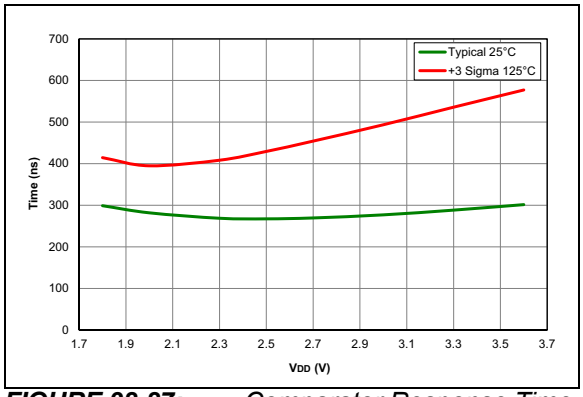

FIGURE 38-87: *Comparator Response Time Rising Edge, PIC16LF15324/44 Only.*

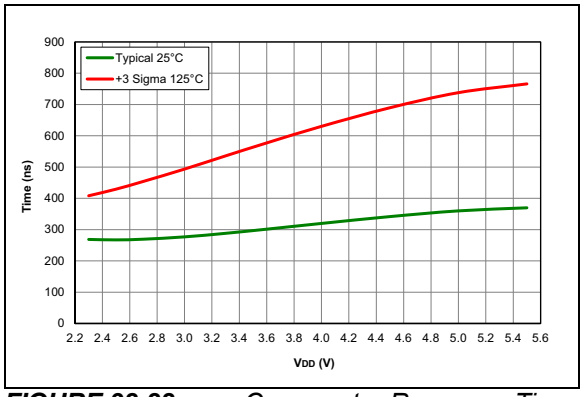

FIGURE 38-88: *Comparator Response Time Rising Edge, PIC16F15324/44 Only.*

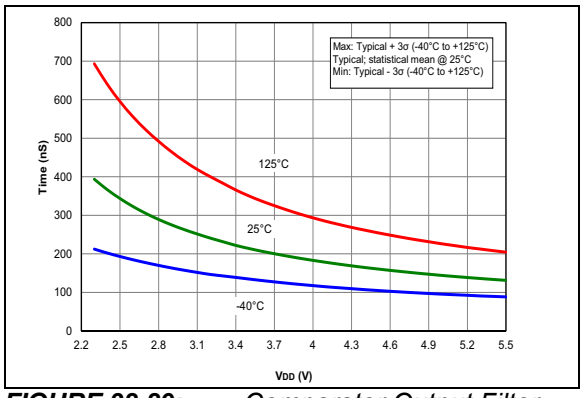

FIGURE 38-89: *Comparator Output Filter Delay Time over Temp., NP mode (CxSP = 1), Typical Measured Values, PIC16F15324/44 Only.*

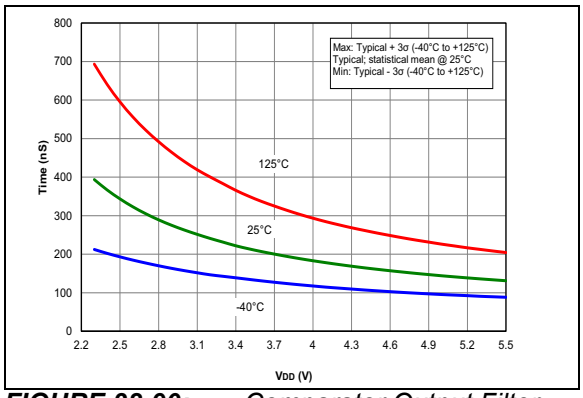

FIGURE 38-90: *Comparator Output Filter Delay Time over Temp., NP mode (CxSP = 1), Typical Measured Values, PIC16LF15324/44 Only.*

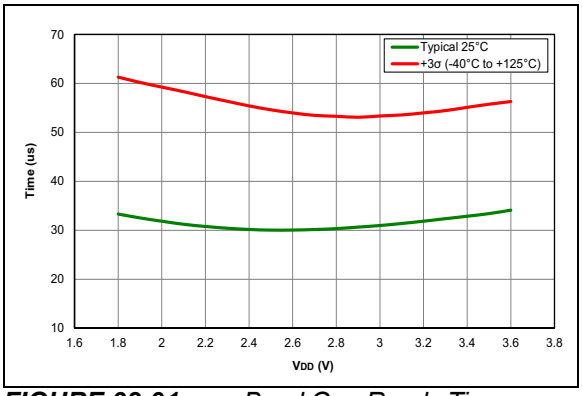

FIGURE 38-91: *Band Gap Ready Time, PIC16LF15324/44 Only.*

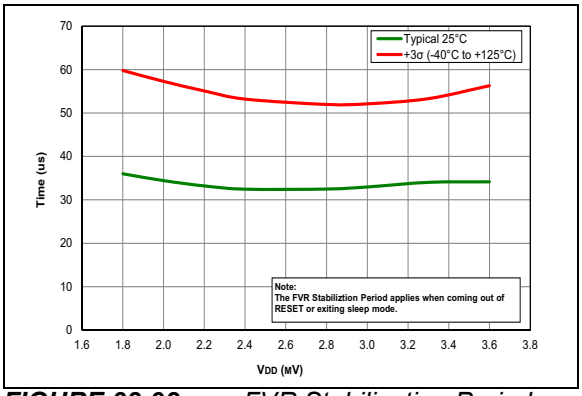

FIGURE 38-92: *FVR Stabilization Period, PIC16LF15324/44 Only.*

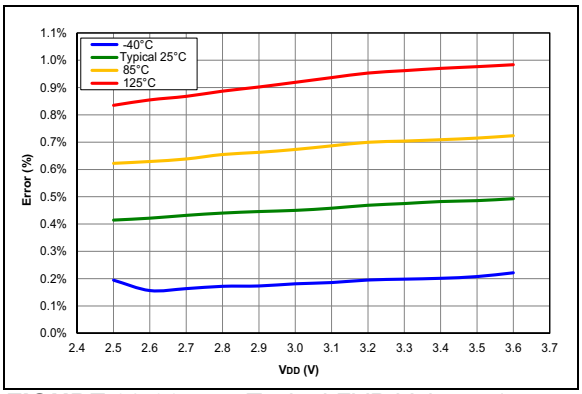

FIGURE 38-93: *Typical FVR Voltage 1x, PIC16LF15324/44 Only.*

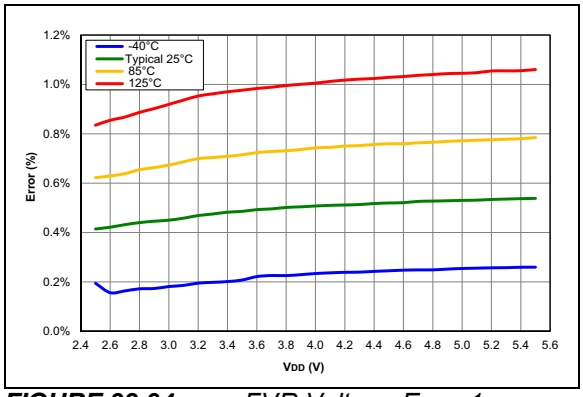

FIGURE 38-94: *FVR Voltage Error 1x, PIC16F15324/44 Only.*

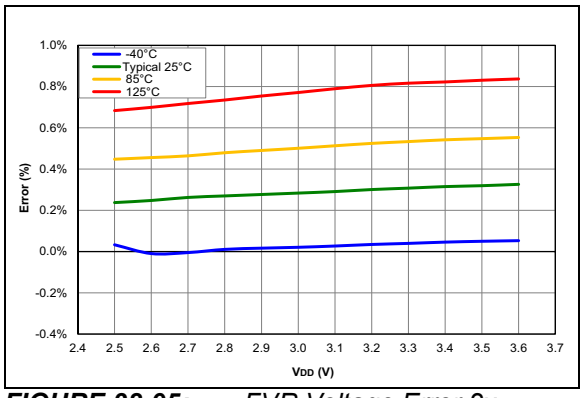

FIGURE 38-95: *FVR Voltage Error 2x, PIC16LF15324/44 Only.*

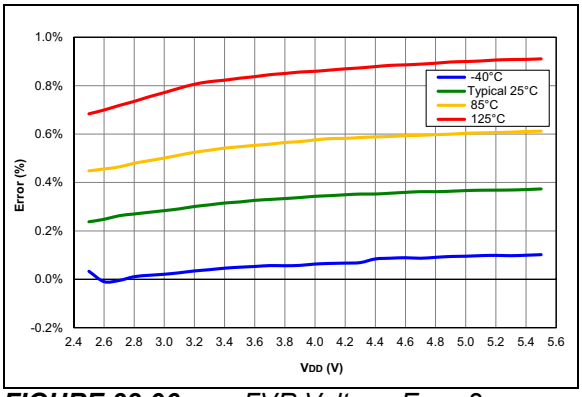

FIGURE 38-96: *FVR Voltage Error 2x, PIC16F15324/44 Only.*

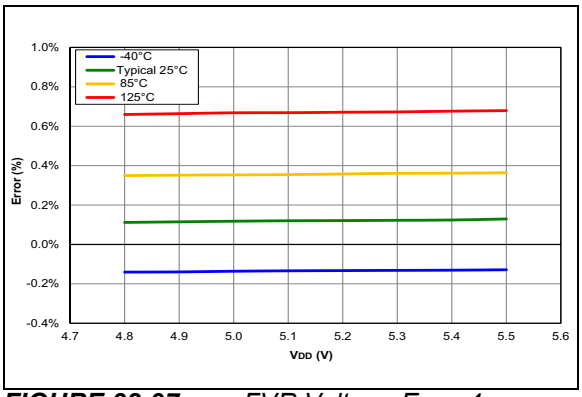

FIGURE 38-97: *FVR Voltage Error 4x, PIC16F15324/44 Only.*

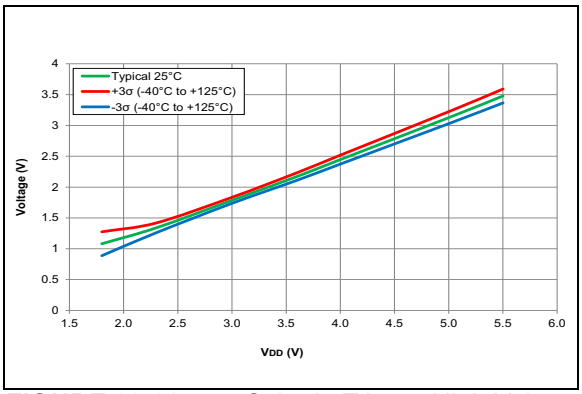

FIGURE 38-98: *Schmitt Trigger High Values.*

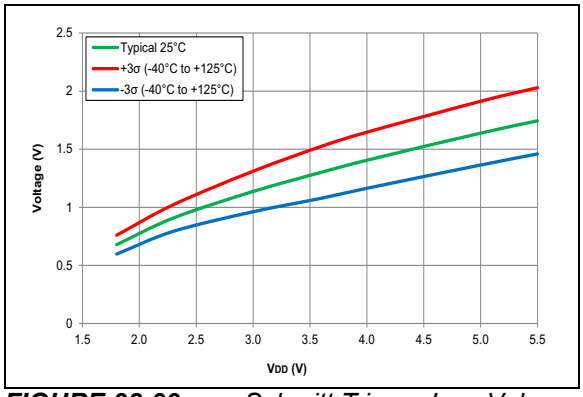

FIGURE 38-99: *Schmitt Trigger Low Values.*

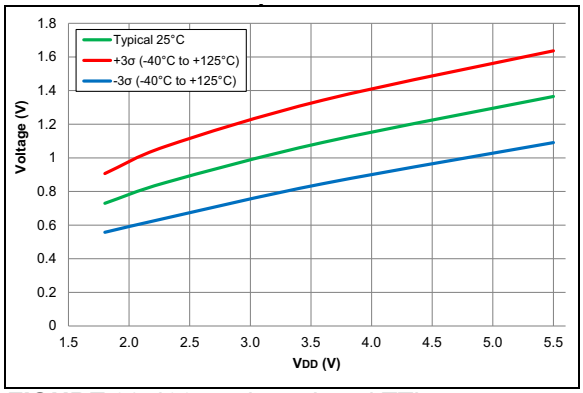

FIGURE 38-100: *Input Level TTL.*

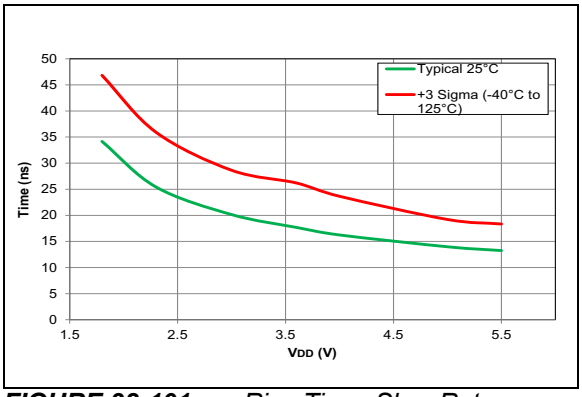

FIGURE 38-101: *Rise Time, Slew Rate Control Enabled.*

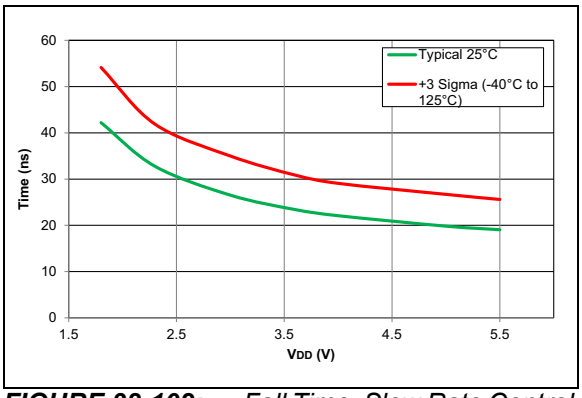

FIGURE 38-102: *Fall Time, Slew Rate Control Enabled.*

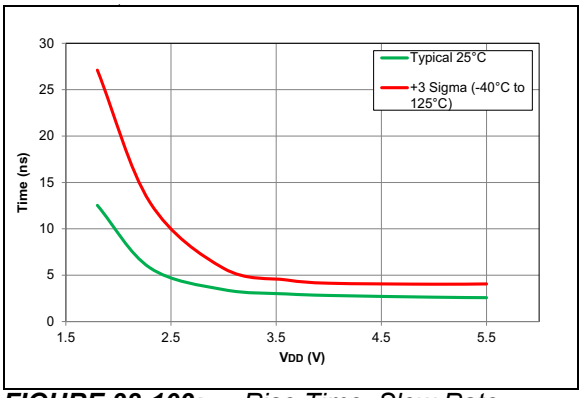

FIGURE 38-103: *Rise Time, Slew Rate Control Disabled.*

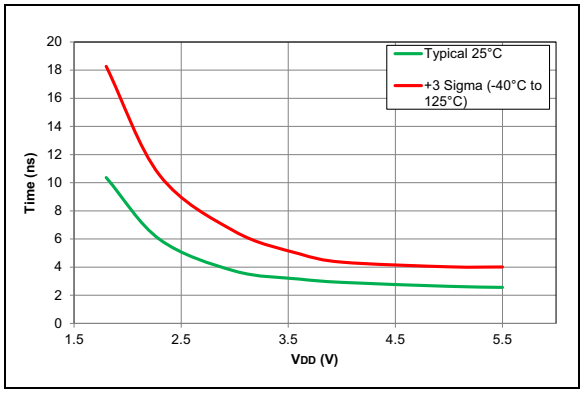

FIGURE 38-104: *Fall Time, Slew Rate Control Disabled.*

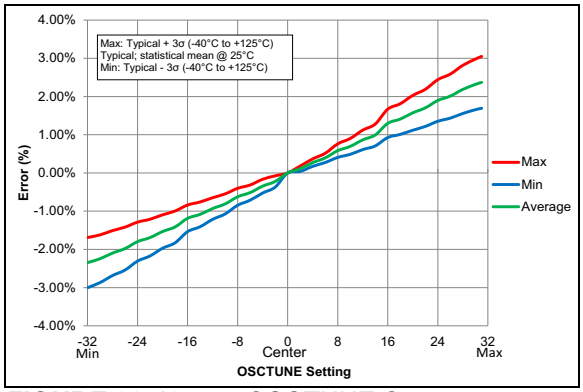

FIGURE 38-105: *OSCTUNE Center Frequency, PIC16LF15324/44 Only.*

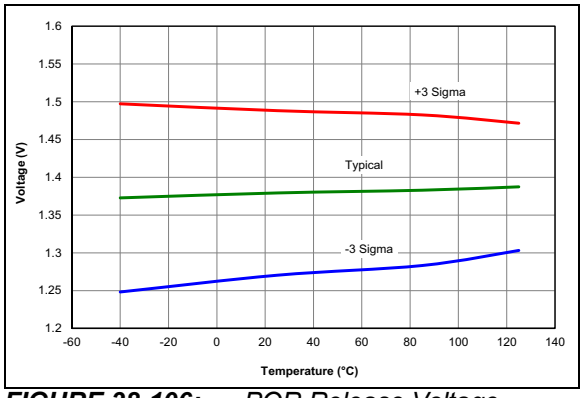

FIGURE 38-106: *POR Release Voltage.*

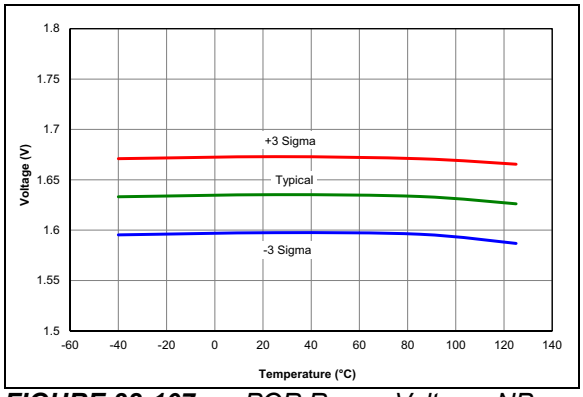

FIGURE 38-107: *POR Rearm Voltage, NP Mode, PIC16F15324/44 Only.*

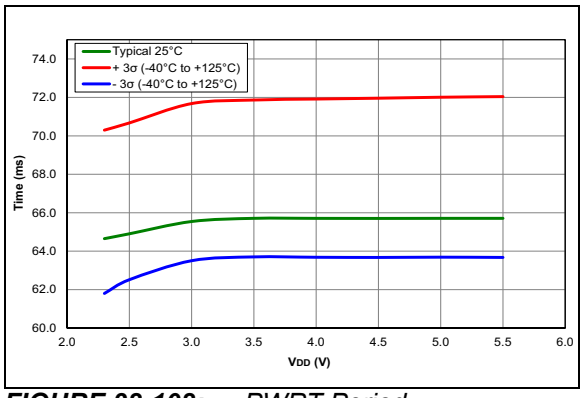

FIGURE 38-108: *PWRT Period, PIC16F15324/44 Only.*

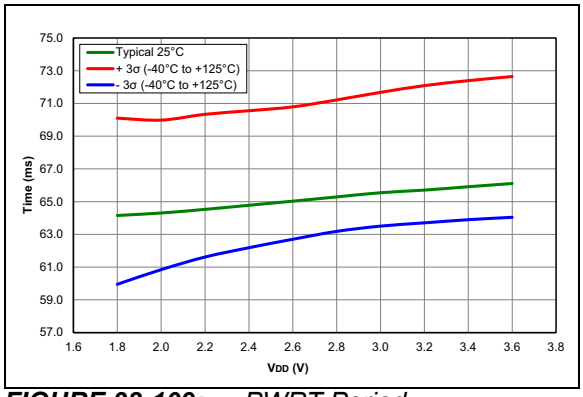

FIGURE 38-109: *PWRT Period, PIC16LF15324/44 Only.*

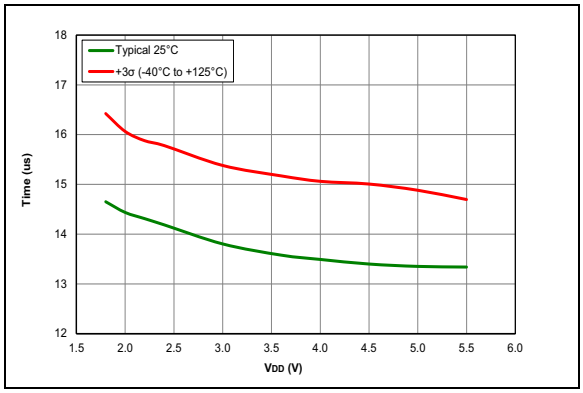

FIGURE 38-110: *Wake From Sleep, VREGPM = 0, HFINTOSC = 4 MHz, PIC16F15324/44 Only.*

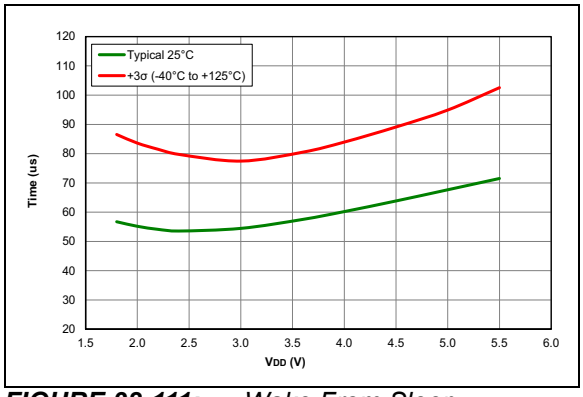

FIGURE 38-111: *Wake From Sleep, VREGPM = 1, HFINTOSC = 4 MHz, PIC16F15324/44 Only.*

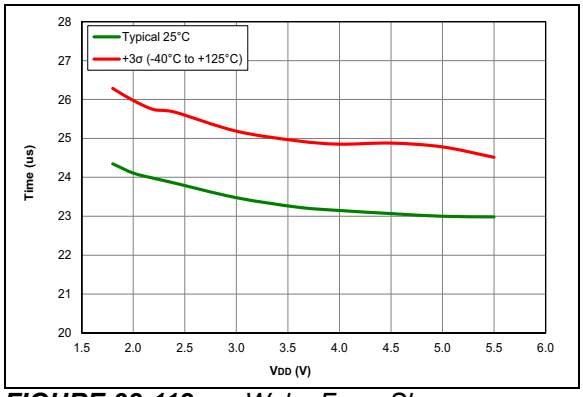

FIGURE 38-112: *Wake From Sleep, VREGPM = 0, HFINTOSC = 16 MHz, PIC16F15324/44 Only.*

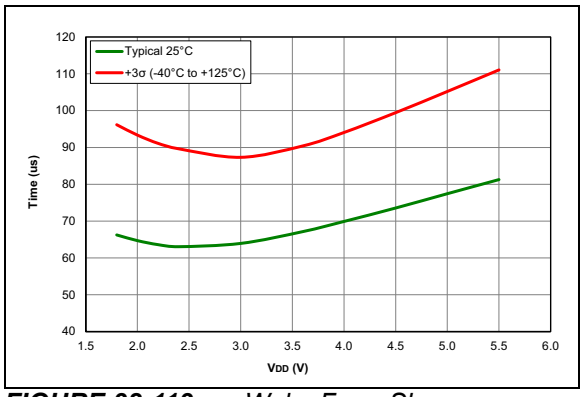

FIGURE 38-113: *Wake From Sleep, VREGPM = 1, HFINTOSC = 16 MHz, PIC16F15324/44 Only.*

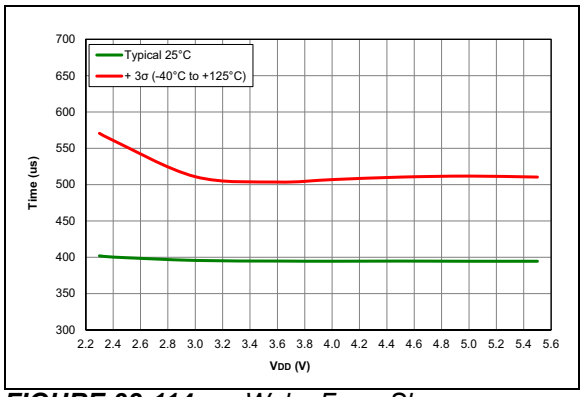

FIGURE 38-114: *Wake From Sleep, VREGPM = 1, PIC16F15324/44 Only.*

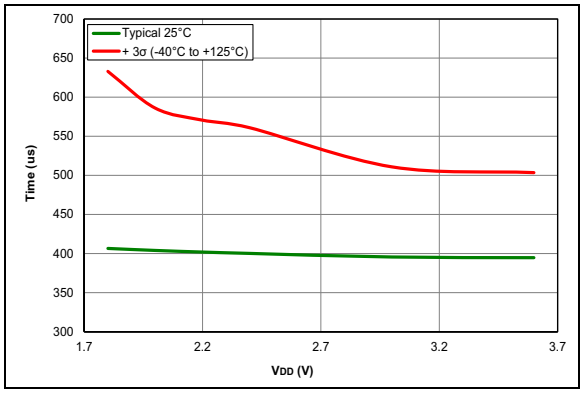

FIGURE 38-115: *Wake From Sleep, PIC16LF15324/44 Only.*

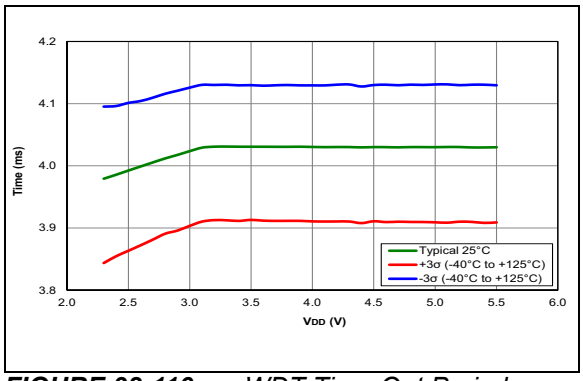

FIGURE 38-116: *WDT Time-Out Period, PIC16F15324/44 Only.*

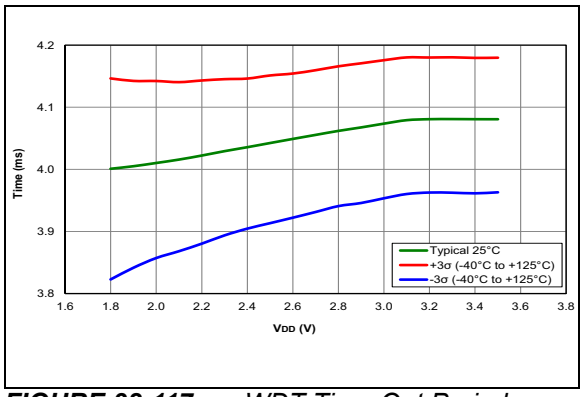

FIGURE 38-117: *WDT Time-Out Period, PIC16LF15324/44 Only.*

39.0 DEVELOPMENT SUPPORT

Move a design from concept to production in record time with Microchip's award-winning development tools. Microchip tools work together to provide state of the art debugging for any project with easy-to-use Graphical User Interfaces (GUIs) in our free MPLAB® X and Atmel Studio Integrated Development Environments (IDEs), and our code generation tools. Providing the ultimate ease-of-use experience, Microchip's line of programmers, debuggers and emulators work seamlessly with our software tools. Microchip development boards help evaluate the best silicon device for an application, while our line of third party tools round out our comprehensive development tool solutions.

Microchip's MPLAB X and Atmel Studio ecosystems provide a variety of embedded design tools to consider, which support multiple devices, such as PIC® MCUs, AVR® MCUs, SAM MCUs and dsPIC® DSCs. MPLAB X tools are compatible with Windows®, Linux® and Mac® operating systems while Atmel Studio tools are compatible with Windows.

Go to the following website for more information and details:

https://www.microchip.com/development-tools/

40.0 PACKAGING INFORMATION

40.1 Package Marking Information

14-Lead PDIP (300 mil)

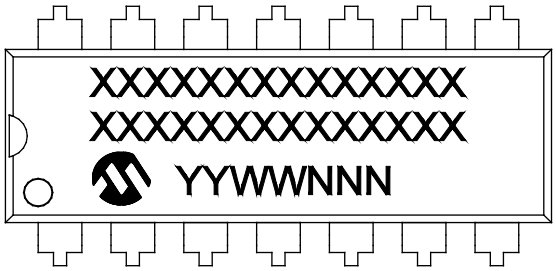

Example

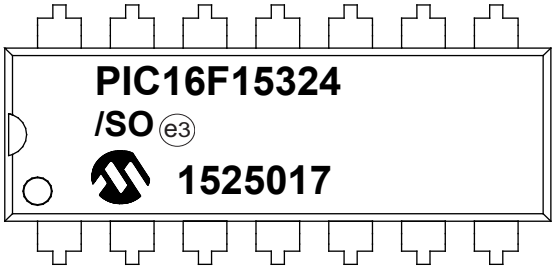

14-Lead TSSOP (4.4 mm)

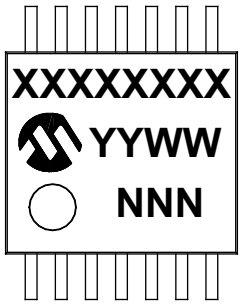

Example

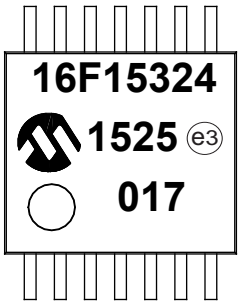

14-Lead SOIC (3.90 mm)

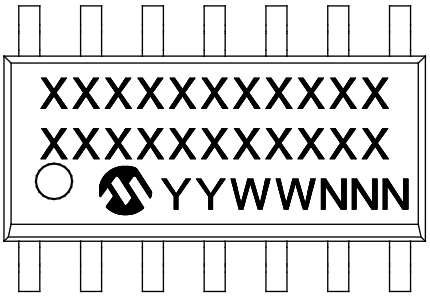

Example

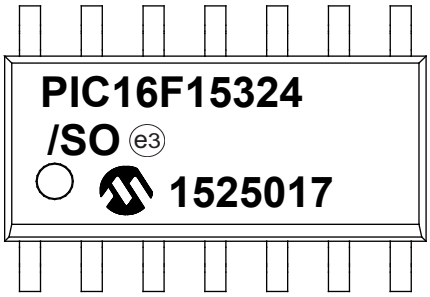

Legend:	XX...X	Customer-specific information
	Y	Year code (last digit of calendar year)
	YY	Year code (last 2 digits of calendar year)
	WW	Week code (week of January 1 is week ‘01’)
	NNN	Alphanumeric traceability code
		Pb-free JEDEC® designator for Matte Tin (Sn)
	*	This package is Pb-free. The Pb-free JEDEC designator (e3) can be found on the outer packaging for this package.

Note: In the event the full Microchip part number cannot be marked on one line, it will be carried over to the next line, thus limiting the number of available characters for customer-specific information.

40.1 Package Marking Information (Continued)

16-Lead UQFN (4x4x0.5 mm)

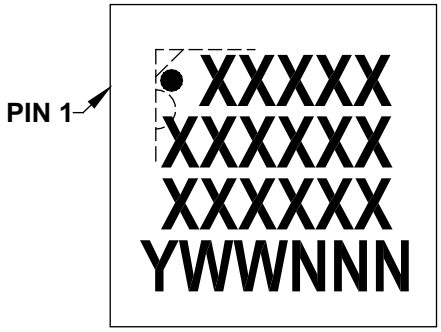

Example

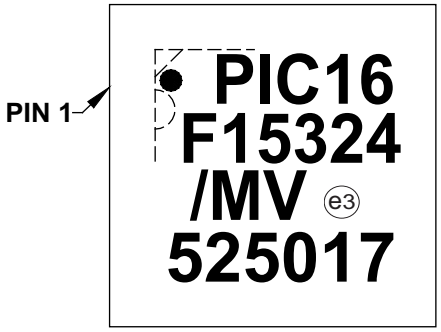

16-Lead VQFN (4x4x1.0 mm)

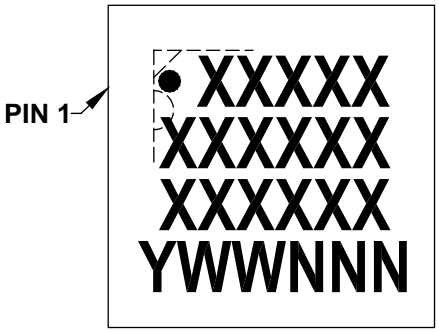

Example

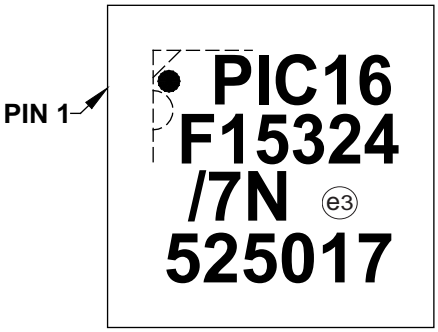

Legend:	XX...X	Customer-specific information
	Y	Year code (last digit of calendar year)
	YY	Year code (last 2 digits of calendar year)
	WW	Week code (week of January 1 is week ‘01’)
	NNN	Alphanumeric traceability code
		Pb-free JEDEC® designator for Matte Tin (Sn)
	*	This package is Pb-free. The Pb-free JEDEC designator (e3) can be found on the outer packaging for this package.

Note: In the event the full Microchip part number cannot be marked on one line, it will be carried over to the next line, thus limiting the number of available characters for customer-specific information.

40.1 Package Marking Information (Continued)

20-Lead PDIP (300 mil)

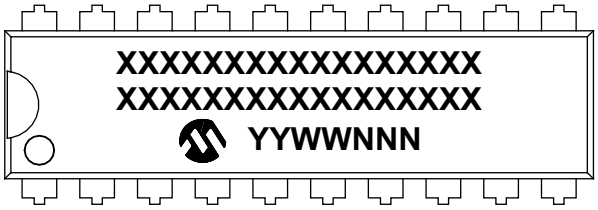

Example

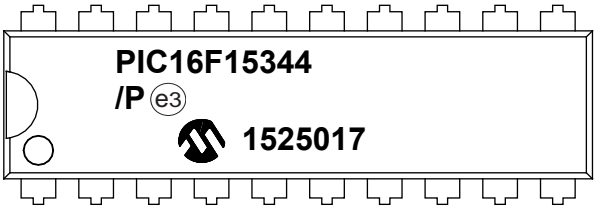

20-Lead SSOP (5.30 mm)

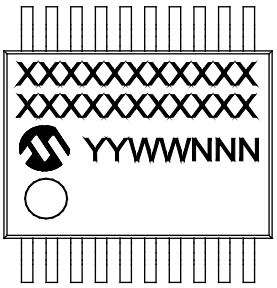

Example

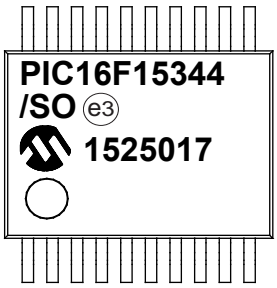

20-Lead SOIC (7.50 mm)

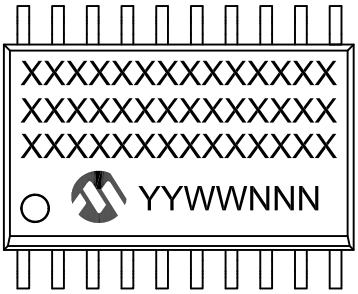

Example

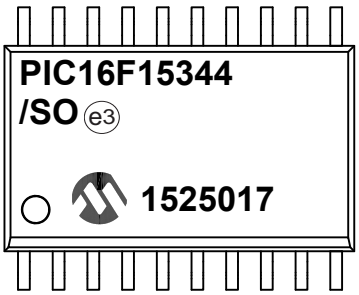

Legend:	XX...X	Customer-specific information
	Y	Year code (last digit of calendar year)
	YY	Year code (last 2 digits of calendar year)
	WW	Week code (week of January 1 is week ‘01’)
	NNN	Alphanumeric traceability code
		Pb-free JEDEC® designator for Matte Tin (Sn)
	*	This package is Pb-free. The Pb-free JEDEC designator (e3) can be found on the outer packaging for this package.

Note: In the event the full Microchip part number cannot be marked on one line, it will be carried over to the next line, thus limiting the number of available characters for customer-specific information.

40.1 Package Marking Information (Continued)

20-Lead UQFN (4x4x0.5 mm)

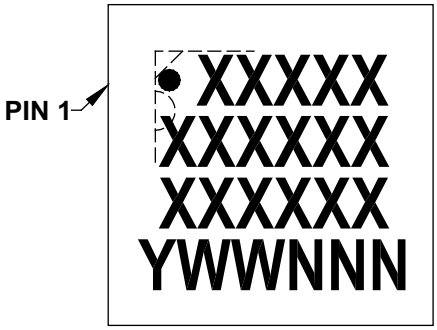

Example

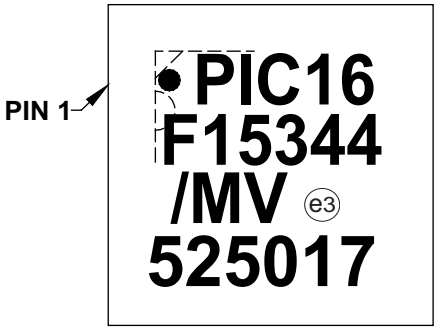

Legend:	XX...X	Customer-specific information
	Y	Year code (last digit of calendar year)
	YY	Year code (last 2 digits of calendar year)
	WW	Week code (week of January 1 is week ‘01’)
	NNN	Alphanumeric traceability code
		Pb-free JEDEC® designator for Matte Tin (Sn)
	*	This package is Pb-free. The Pb-free JEDEC designator (e3) can be found on the outer packaging for this package.

Note: In the event the full Microchip part number cannot be marked on one line, it will be carried over to the next line, thus limiting the number of available characters for customer-specific information.

The following sections give the technical details of the packages.

14-Lead Plastic Dual In-Line (P) – 300 mil Body [PDIP]

Note: For the most current package drawings, please see the Microchip Packaging Specification located at http://www.microchip.com/packaging

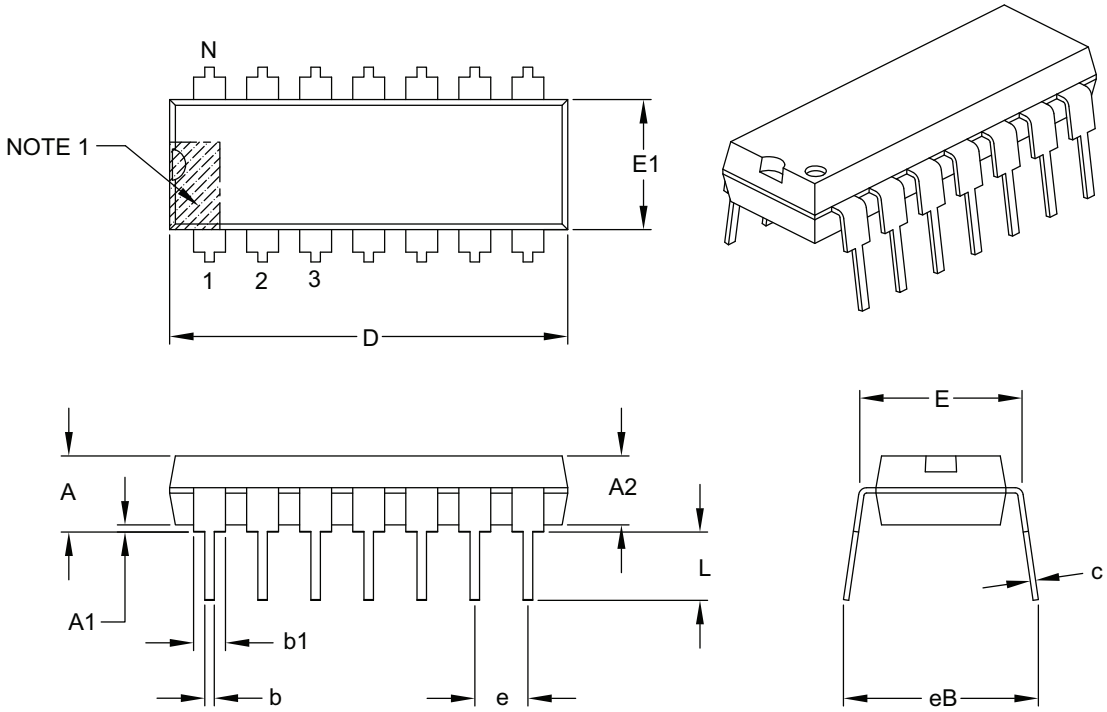

Units		INCHES		
Dimension Limits		MIN	NOM	MAX
Number of Pins	N	14		
Pitch	e	.100 BSC		
Top to Seating Plane	A	–	–	.210
Molded Package Thickness	A2	.115	.130	.195
Base to Seating Plane	A1	.015	–	–
Shoulder to Shoulder Width	E	.290	.310	.325
Molded Package Width	E1	.240	.250	.280
Overall Length	D	.735	.750	.775
Tip to Seating Plane	L	.115	.130	.150
Lead Thickness	c	.008	.010	.015
Upper Lead Width	b1	.045	.060	.070
Lower Lead Width	b	.014	.018	.022
Overall Row Spacing §	eB	–	–	.430

Notes:
1. Pin 1 visual index feature may vary, but must be located with the hatched area.
2. § Significant Characteristic.
3. Dimensions D and E1 do not include mold flash or protrusions. Mold flash or protrusions shall not exceed .010" per side.
4. Dimensioning and tolerancing per ASME Y14.5M.
   BSC: Basic Dimension. Theoretically exact value shown without tolerances.

Microchip Technology Drawing C04-005B

14-Lead Plastic Small Outline (OD) - Narrow, 3.90 mm Body [SOIC]

Note: For the most current package drawings, please see the Microchip Packaging Specification located at http://www.microchip.com/packaging

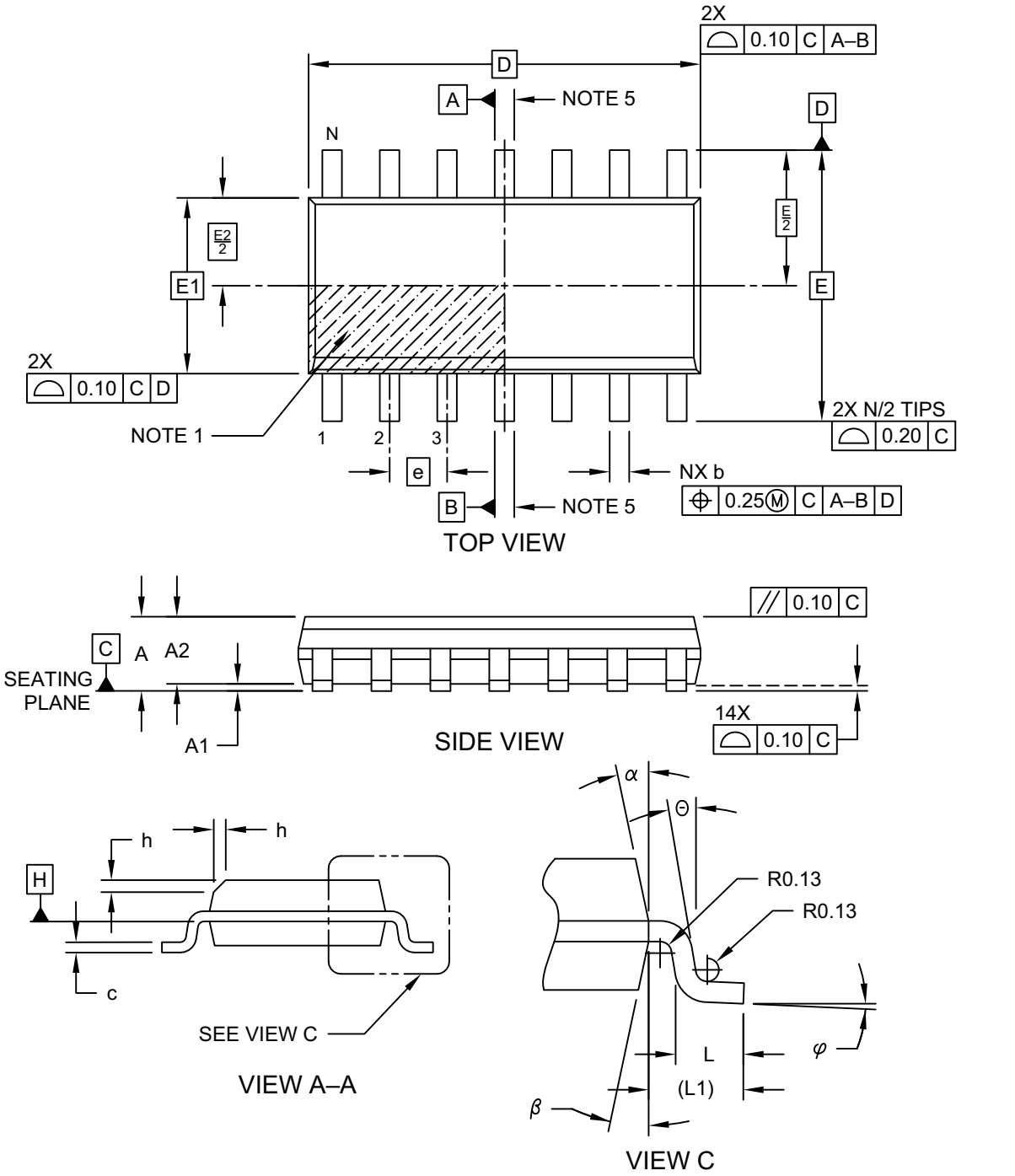

Microchip Technology Drawing No. C04-065-OD Rev D Sheet 1 of 2

14-Lead Plastic Small Outline (SL) - Narrow, 3.90 mm Body [SOIC]

Note: For the most current package drawings, please see the Microchip Packaging Specification located at http://www.microchip.com/packaging

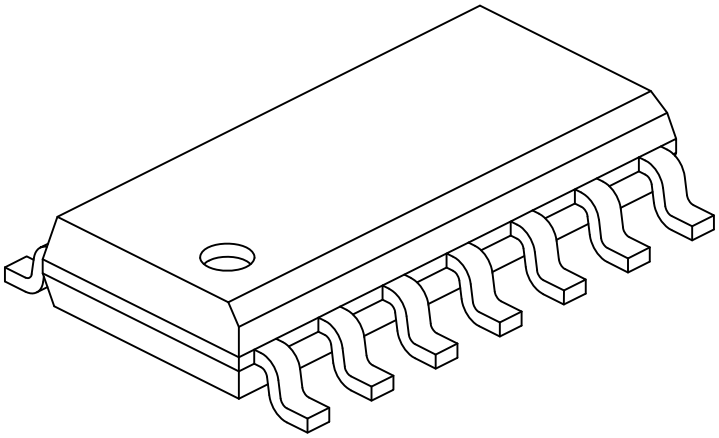

Units		MILLIMETERS		
Dimension Limits		MIN	NOM	MAX
Number of Pins	N	14		
Pitch	e	1.27 BSC		
Overall Height	A	-	-	1.75
Molded Package Thickness	A2	1.25	-	-
Standoff §	A1	0.10	-	0.25
Overall Width	E	6.00 BSC		
Molded Package Width	E1	3.90 BSC		
Overall Length	D	8.65 BSC		
Chamfer (Optional)	h	0.25	-	0.50
Foot Length	L	0.40	-	1.27
Footprint	L1	1.04 REF		
Lead Angle	Θ	0°	-	-
Foot Angle	φ	0°	-	8°
Lead Thickness	c	0.10	-	0.25
Lead Width	b	0.31	-	0.51
Mold Draft Angle Top	α	5°	-	15°
Mold Draft Angle Bottom	β	5°	-	15°

Notes:

1. Pin 1 visual index feature may vary, but must be located within the hatched area.
2. § Significant Characteristic
3. Dimension D does not include mold flash, protrusions or gate burrs, which shall not exceed 0.15 mm per end. Dimension E1 does not include interlead flash or protrusion, which shall not exceed 0.25 mm per side.
4. Dimensioning and tolerancing per ASME Y14.5M
   BSC: Basic Dimension. Theoretically exact value shown without tolerances.
   REF: Reference Dimension, usually without tolerance, for information purposes only.
5. Datums A & B to be determined at Datum H.

Microchip Technology Drawing No. C04-065-SL Rev D Sheet 2 of 2

14-Lead Plastic Small Outline (SL) - Narrow, 3.90 mm Body [SOIC]

Note: For the most current package drawings, please see the Microchip Packaging Specification located at http://www.microchip.com/packaging

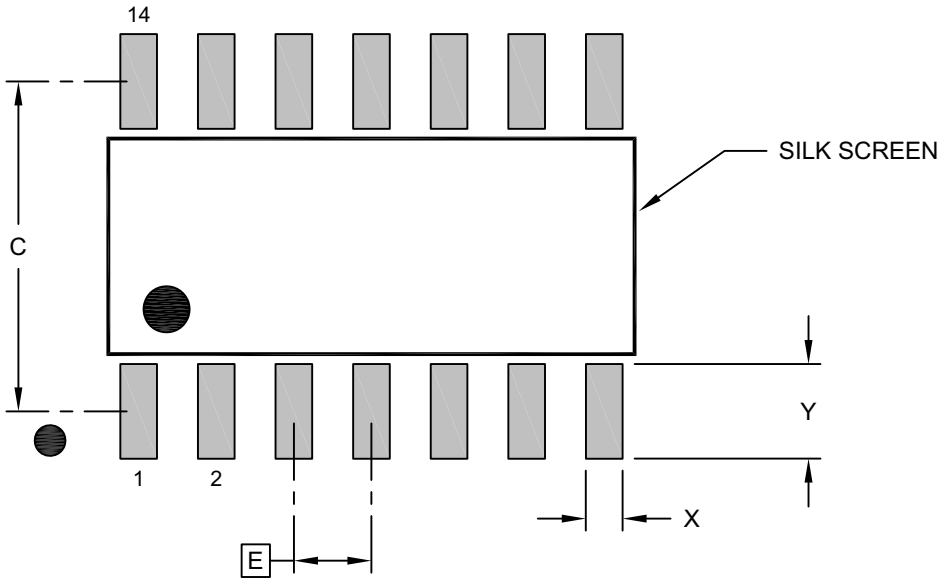

RECOMMENDED LAND PATTERN

Units		MILLIMETERS		
Dimension Limits		MIN	NOM	MAX
Contact Pitch	E		1.27 BSC	
Contact Pad Spacing	C		5.40	
Contact Pad Width (X14)	X			0.60
Contact Pad Length (X14)	Y			1.55

Notes:

1. Dimensioning and tolerancing per ASME Y14.5M
   BSC: Basic Dimension. Theoretically exact value shown without tolerances.

Microchip Technology Drawing No. C04-2065-SL Rev D

14Lead Thin Shrink Small Outline Package [ST] 4.4 mm Body [TSSOP]

Note:	For the most current package drawings, please see the Microchip Packaging Specification located at http://www.microchip.com/packaging

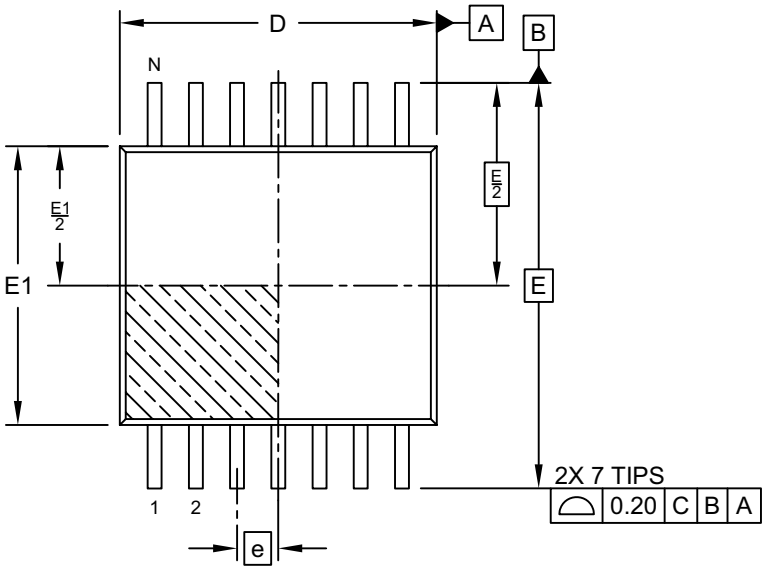

TOP VIEW

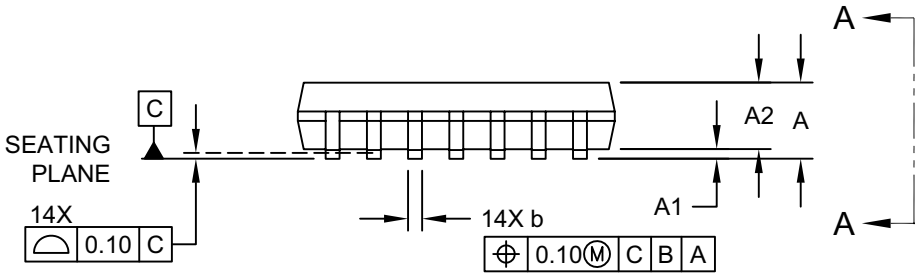

SIDE VIEW

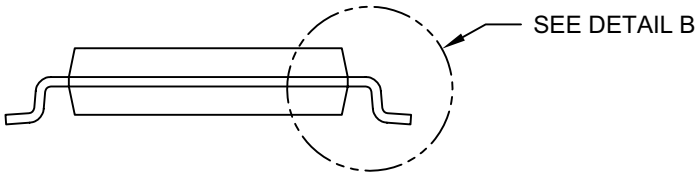

VIEW A–A

Microchip Technology Drawing C04-087 Rev D Sheet 1 of 2

14Lead Thin Shrink Small Outline Package [ST] 4.4 mm Body [TSSOP]

Note: For the most current package drawings, please see the Microchip Packaging Specification located at http://www.microchip.com/packaging

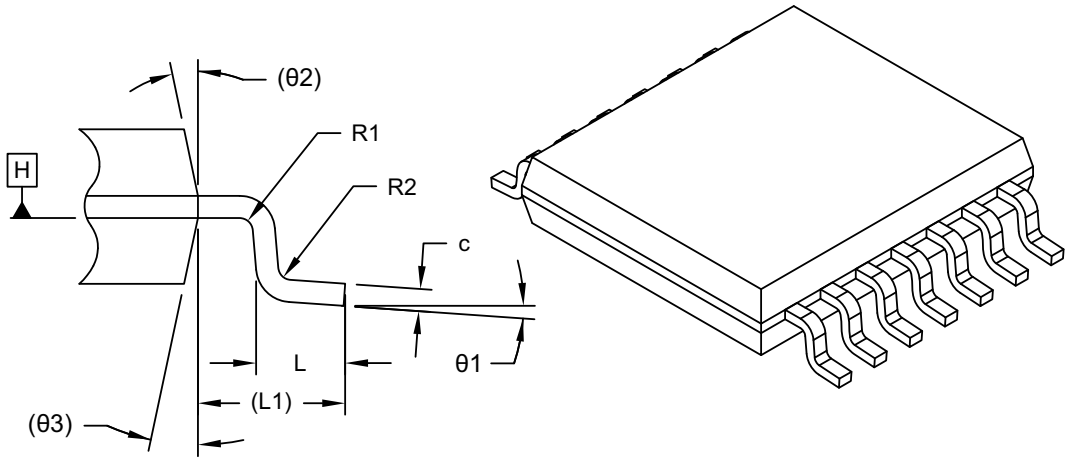

DETAIL B

Units		MILLIMETERS		
Dimension Limits		MIN	NOM	MAX
Number of Terminals	N	14		
Pitch	e	0.65 BSC		
Overall Height	A	–	–	1.20
Standoff	A1	0.05	–	0.15
Molded Package Thickness	A2	0.80	1.00	1.05
Overall Length	D	4.90	5.00	5.10
Overall Width	E	6.40 BSC		
Molded Package Width	E1	4.30	4.40	4.50
Terminal Width	b	0.19	–	0.30
Terminal Thickness	c	0.09	–	0.20
Terminal Length	L	0.45	0.60	0.75
Footprint	L1	1.00 REF		
Lead Bend Radius	R1	0.09	–	–
Lead Bend Radius	R2	0.09	–	–
Foot Angle	θ1	0°	–	8°
Mold Draft Angle	θ2	–	12° REF	–
Mold Draft Angle	θ3	–	12° REF	–

Notes:

1. Pin 1 visual index feature may vary, but must be located within the hatched area.
2. Dimensioning and tolerancing per ASME Y14.5M
   BSC: Basic Dimension. Theoretically exact value shown without tolerances.
   REF: Reference Dimension, usually without tolerance, for information purposes only.

Microchip Technology Drawing C04-087 Rev D Sheet 2 of 2

14Lead Thin Shrink Small Outline Package [ST] 4.4 mm Body [TSSOP]

Note: For the most current package drawings, please see the Microchip Packaging Specification located at http://www.microchip.com/packaging

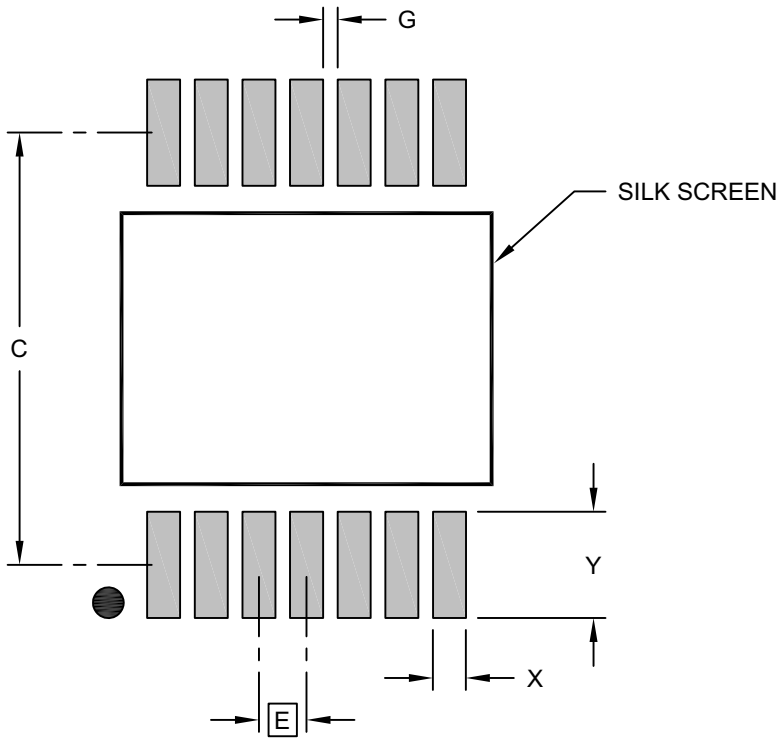

RECOMMENDED LAND PATTERN

Units		MILLIMETERS		
Dimension Limits		MIN	NOM	MAX
Contact Pitch	E	0.65 BSC		
Contact Pad Spacing	C		5.90	
Contact Pad Width (Xnn)	X			0.45
Contact Pad Length (Xnn)	Y			1.45
Contact Pad to Contact Pad (Xnn)	G	0.20		

Notes:

1. Dimensioning and tolerancing per ASME Y14.5M
   BSC: Basic Dimension. Theoretically exact value shown without tolerances.

Microchip Technology Drawing C04-2087 Rev D

16-Lead Ultra Thin Plastic Quad Flat, No Lead Package (JQ) - 4x4x0.5 mm Body [UQFN]

Note: For the most current package drawings, please see the Microchip Packaging Specification located at http://www.microchip.com/packaging

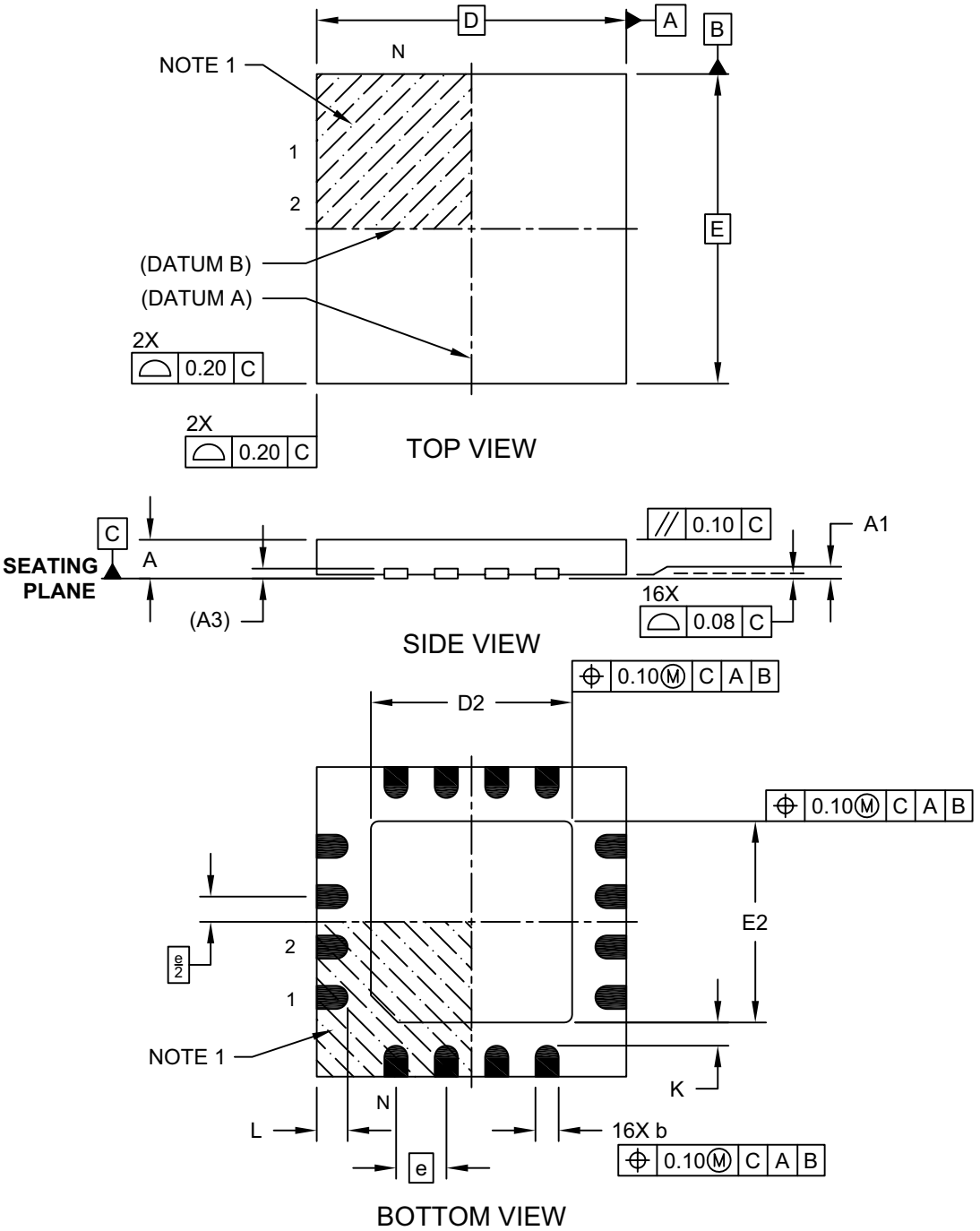

Microchip Technology Drawing C04-257A Sheet 1 of 2

16-Lead Ultra Thin Plastic Quad Flat, No Lead Package (JQ) - 4x4x0.5 mm Body [UQFN]

Note: For the most current package drawings, please see the Microchip Packaging Specification located at http://www.microchip.com/packaging

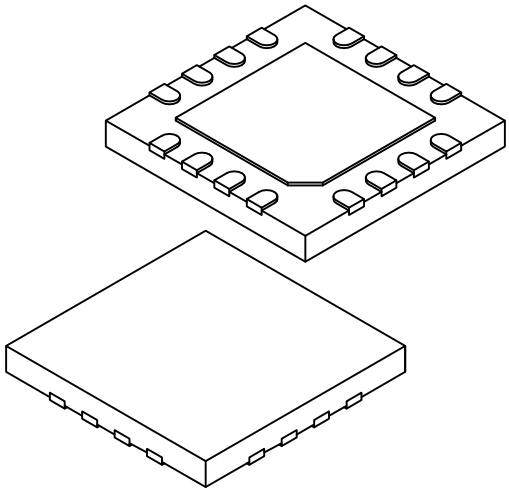

Units		MILLIMETERS		
Dimension Limits		MIN	NOM	MAX
Number of Pins	N	16		
Pitch	e	0.65 BSC		
Overall Height	A	0.45	0.50	0.55
Standoff	A1	0.00	0.02	0.05
Terminal Thickness	A3	0.127 REF		
Overall Width	E	4.00 BSC		
Exposed Pad Width	E2	2.50	2.60	2.70
Overall Length	D	4.00 BSC		
Exposed Pad Length	D2	2.50	2.60	2.70
Terminal Width	b	0.25	0.30	0.35
Terminal Length	L	0.30	0.40	0.50
Terminal-to-Exposed-Pad	K	0.20	-	-

Notes:

1. Pin 1 visual index feature may vary, but must be located within the hatched area.
2. Package is saw singulated
3. Dimensioning and tolerancing per ASME Y14.5M

   BSC: Basic Dimension. Theoretically exact value shown without tolerances.

   REF: Reference Dimension, usually without tolerance, for information purposes only.

Microchip Technology Drawing C04-257A Sheet 2 of 2

16-Lead Ultra Thin Plastic Quad Flat, No Lead Package (JQ) - 4x4x0.5 mm Body [UQFN]

Note: For the most current package drawings, please see the Microchip Packaging Specification located at http://www.microchip.com/packaging

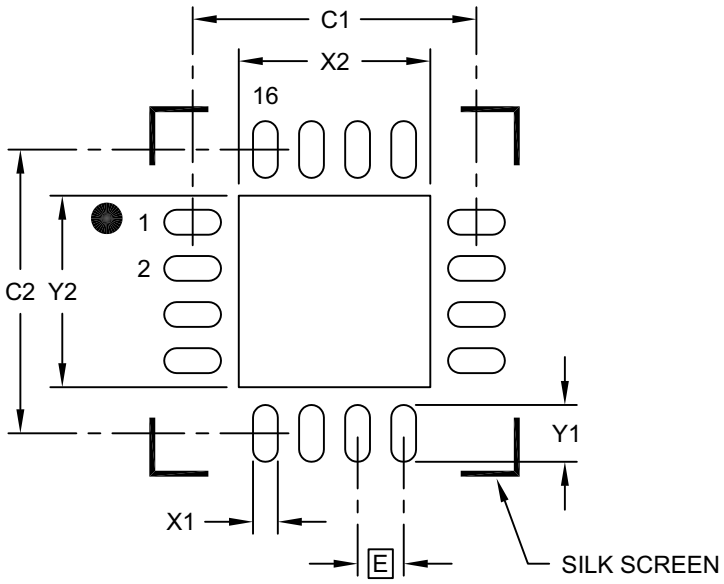

RECOMMENDED LAND PATTERN

Units		MILLIMETERS		
Dimension Limits		MIN	NOM	MAX
Contact Pitch	E	0.65 BSC		
Optional Center Pad Width	X2			2.70
Optional Center Pad Length	Y2			2.70
Contact Pad Spacing	C1		4.00	
Contact Pad Spacing	C2		4.00	
Contact Pad Width (X16)	X1			0.35
Contact Pad Length (X16)	Y1			0.80

Notes:

1. Dimensioning and tolerancing per ASME Y14.5M

   BSC: Basic Dimension. Theoretically exact value shown without tolerances.

Microchip Technology Drawing C04-2257A

16-Lead Plastic Quad Flat, No Lead Package (7N) - 4x4x1.0 mm Body [VQFN] Wettable Flanks (Stepped), 0.40 mm Terminal Length

Note: For the most current package drawings, please see the Microchip Packaging Specification located at http://www.microchip.com/packaging

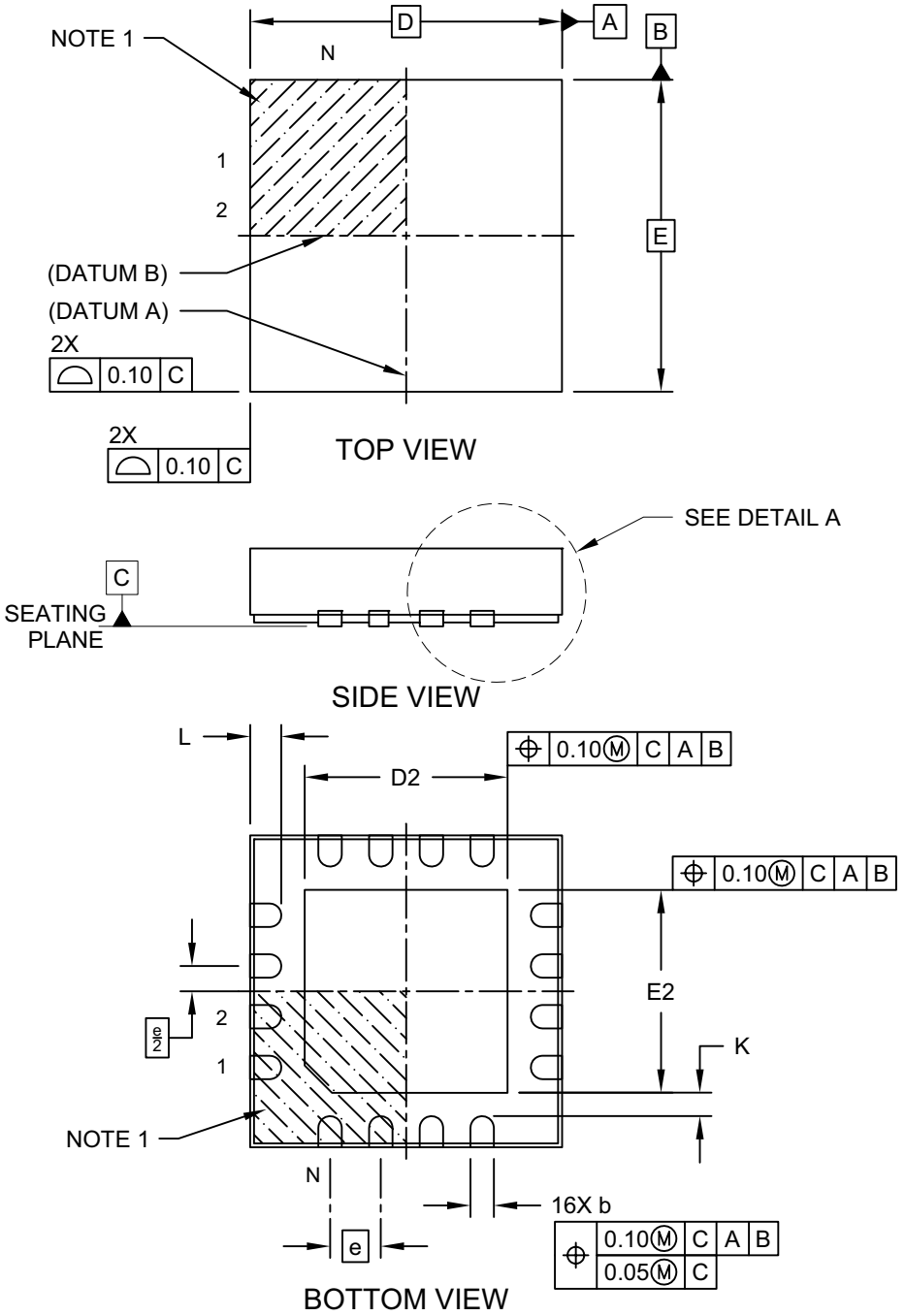

Microchip Technology Drawing C04-403C Sheet 1 of 2

16-Lead Plastic Quad Flat, No Lead Package (7N) - 4x4x1.0 mm Body [VQFN] Wettable Flanks (Stepped), 0.40 mm Terminal Length

Note: For the most current package drawings, please see the Microchip Packaging Specification located at http://www.microchip.com/packaging

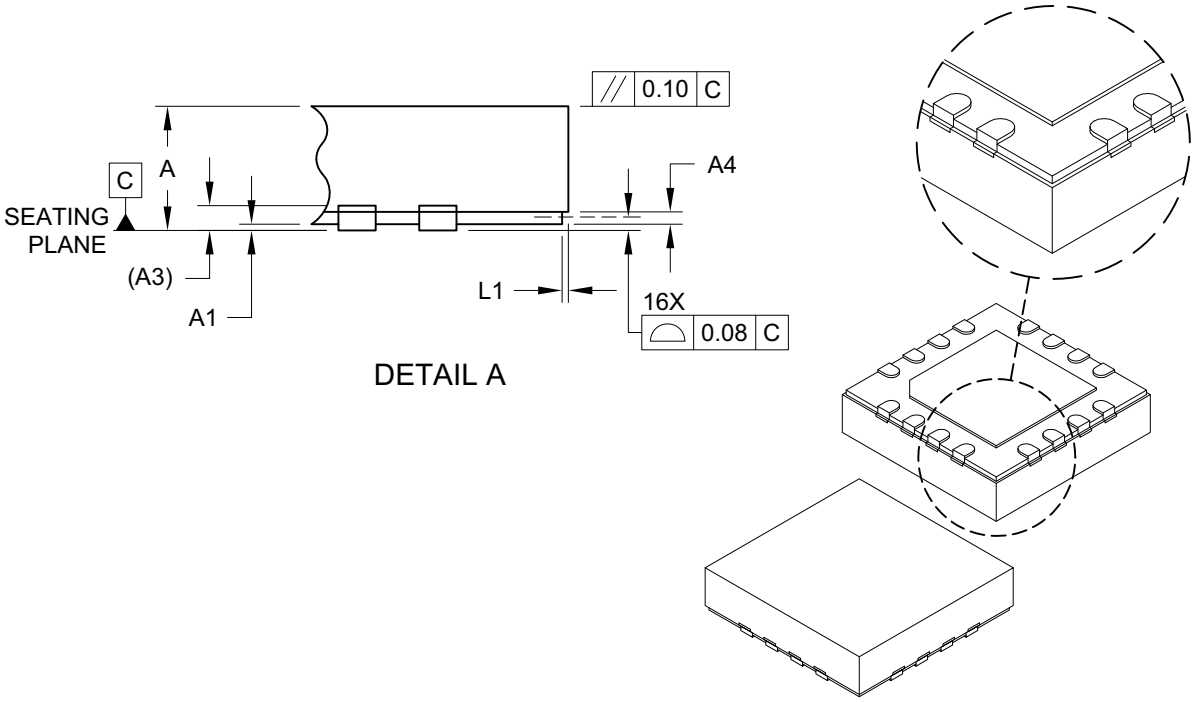

Units		MILLIMETERS		
Dimension Limits		MIN	NOM	MAX
Number of Terminals	N	16		
Pitch	e	0.65 BSC		
Overall Height	A	0.80	0.90	1.00
Standoff	A1	0.00	0.02	0.05
Terminal Thickness	A3	0.20 REF		
Step Height	A4	0.05	0.12	0.19
Overall Width	E	4.00 BSC		
Exposed Pad Width	E2	2.50	2.60	2.70
Overall Length	D	4.00 BSC		
Exposed Pad Length	D2	2.50	2.60	2.70
Terminal Width	b	0.25	0.30	0.35
Terminal Length	L	0.30	0.40	0.50
Step Length	L1	0.035	0.060	0.085
Terminal-to-Exposed Pad	K	0.30	-	-

Notes:

1. Pin 1 visual index feature may vary, but must be located within the hatched area.
2. Package is saw singulated
3. Dimensioning and tolerancing per ASME Y14.5M

   BSC: Basic Dimension. Theoretically exact value shown without tolerances.

   REF: Reference Dimension, usually without tolerance, for information purposes only.

Microchip Technology Drawing C04-403C Sheet 2 of 2

16-Lead Plastic Quad Flat, No Lead Package (7N) - 4x4x1.0 mm Body [VQFN] Wettable Flanks (Stepped), 0.40 mm Terminal Length

Note: For the most current package drawings, please see the Microchip Packaging Specification located at http://www.microchip.com/packaging

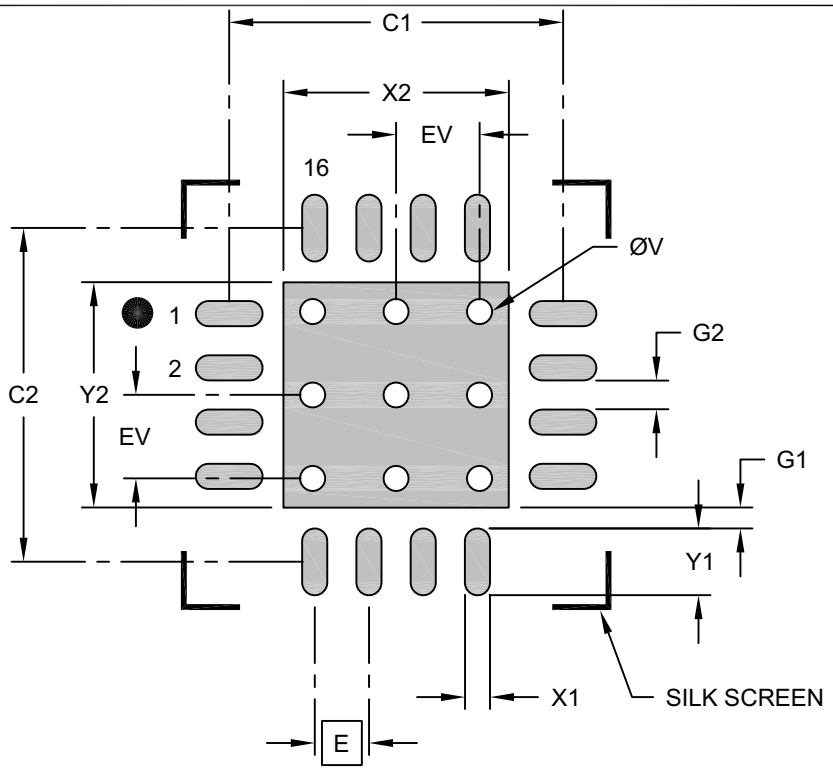

RECOMMENDED LAND PATTERN

Units		MILLIMETERS		
Dimension Limits		MIN	NOM	MAX
Contact Pitch	E	0.65 BSC		
Optional Center Pad Width	X2			2.70
Optional Center Pad Length	Y2			2.70
Contact Pad Spacing	C1		4.00	
Contact Pad Spacing	C2		4.00	
Contact Pad Width (X16)	X1			0.30
Contact Pad Length (X16)	Y1			0.80
Contact Pad to Center Pad (X16)	G1	0.20		
Contact Pad to Contact Pad (X12)	G2	0.35		
Thermal Via Diameter	V		0.30	
Thermal Via Pitch	EV		1.00	

Notes:

1. Dimensioning and tolerancing per ASME Y14.5M
   BSC: Basic Dimension. Theoretically exact value shown without tolerances.
2. For best soldering results, thermal vias, if used, should be filled or tented to avoid solder loss during reflow process

Microchip Technology Drawing C04-2403B

20-Lead Plastic Dual In-Line (P) – 300 mil Body [PDIP]

Note: For the most current package drawings, please see the Microchip Packaging Specification located at http://www.microchip.com/packaging

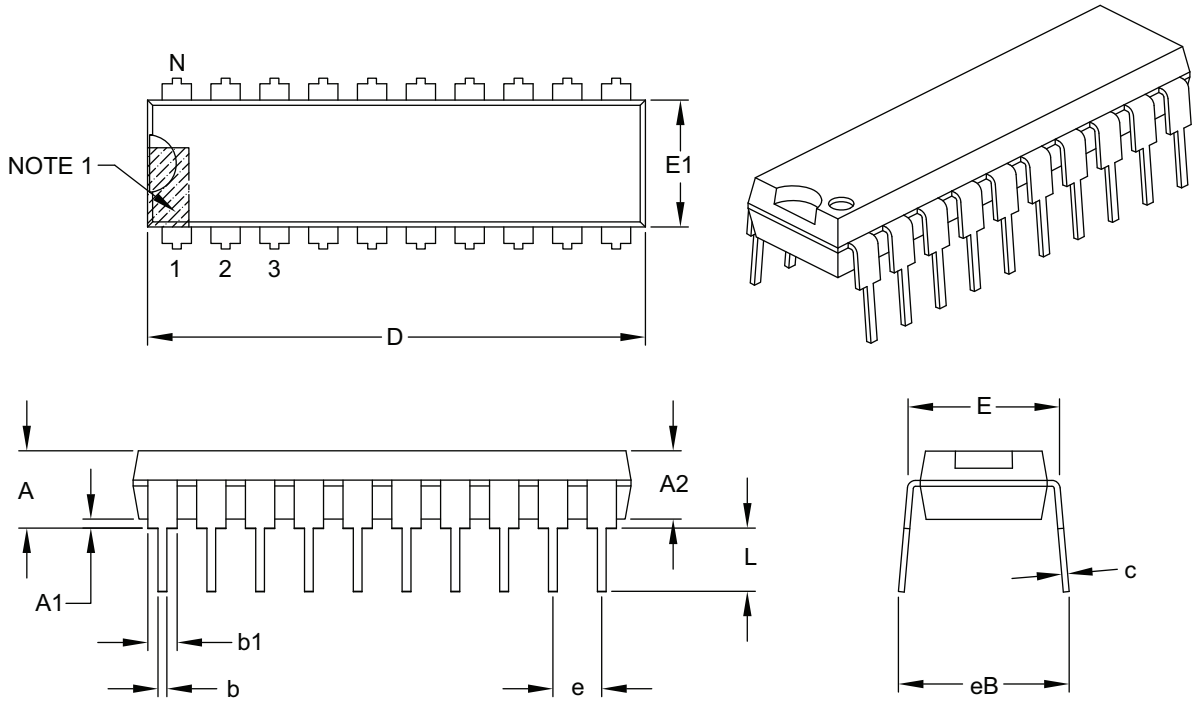

Units		INCHES		
Dimension Limits		MIN	NOM	MAX
Number of Pins	N	20		
Pitch	e	.100 BSC		
Top to Seating Plane	A	–	–	.210
Molded Package Thickness	A2	.115	.130	.195
Base to Seating Plane	A1	.015	–	–
Shoulder to Shoulder Width	E	.300	.310	.325
Molded Package Width	E1	.240	.250	.280
Overall Length	D	.980	1.030	1.060
Tip to Seating Plane	L	.115	.130	.150
Lead Thickness	c	.008	.010	.015
Upper Lead Width	b1	.045	.060	.070
Lower Lead Width	b	.014	.018	.022
Overall Row Spacing §	eB	–	–	.430

Notes:

1. Pin 1 visual index feature may vary, but must be located within the hatched area.
2. § Significant Characteristic.
3. Dimensions D and E1 do not include mold flash or protrusions. Mold flash or protrusions shall not exceed .010" per side.
4. Dimensioning and tolerancing per ASME Y14.5M.

   BSC: Basic Dimension. Theoretically exact value shown without tolerances.

Microchip Technology Drawing C04-019B

20-Lead Plastic Shrink Small Outline (SS) – 5.30 mm Body [SSOP]

Note: For the most current package drawings, please see the Microchip Packaging Specification located at http://www.microchip.com/packaging

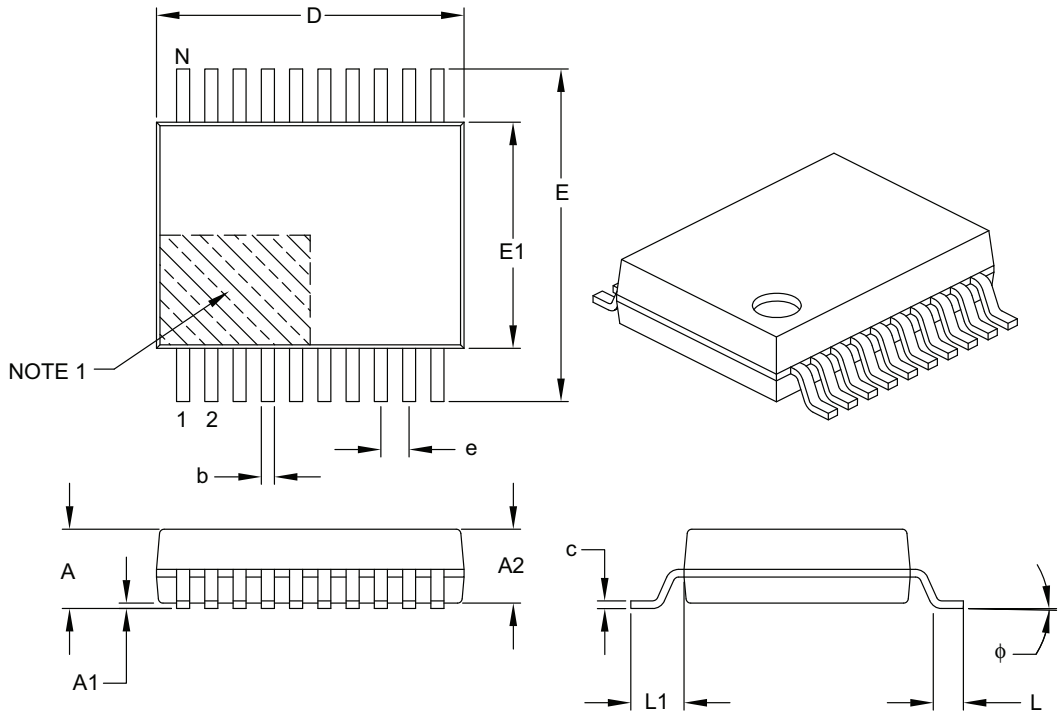

Units		MILLIMETERS		
Dimension Limits		MIN	NOM	MAX
Number of Pins	N	20		
Pitch	e	0.65 BSC		
Overall Height	A	–	–	2.00
Molded Package Thickness	A2	1.65	1.75	1.85
Standoff	A1	0.05	–	–
Overall Width	E	7.40	7.80	8.20
Molded Package Width	E1	5.00	5.30	5.60
Overall Length	D	6.90	7.20	7.50
Foot Length	L	0.55	0.75	0.95
Footprint	L1	1.25 REF		
Lead Thickness	c	0.09	–	0.25
Foot Angle	ϕ	0°	4°	8°
Lead Width	b	0.22	–	0.38

Notes:

1. Pin 1 visual index feature may vary, but must be located within the hatched area.
2. Dimensions D and E1 do not include mold flash or protrusions. Mold flash or protrusions shall not exceed 0.20 mm per side.
3. Dimensioning and tolerancing per ASME Y14.5M.
   BSC: Basic Dimension. Theoretically exact value shown without tolerances.
   REF: Reference Dimension, usually without tolerance, for information purposes only.

Microchip Technology Drawing C04-072B

20-Lead Plastic Shrink Small Outline (SS) - 5.30 mm Body [SSOP]

Note: For the most current package drawings, please see the Microchip Packaging Specification located at http://www.microchip.com/packaging

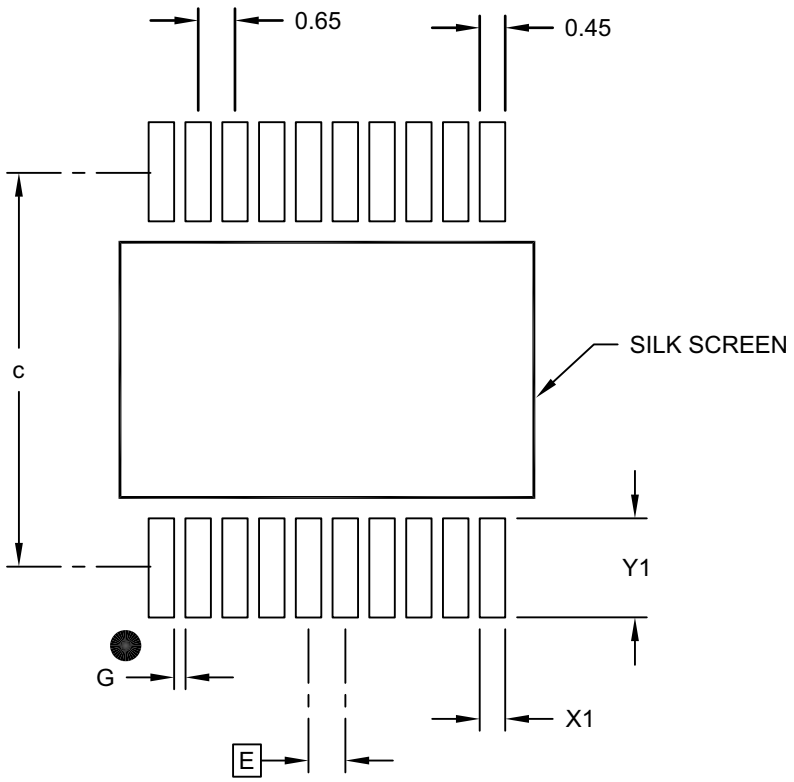

RECOMMENDED LAND PATTERN

Units		MILLIMETERS		
Dimension Limits		MIN	NOM	MAX
Contact Pitch	E	0.65 BSC		
Contact Pad Spacing	C		7.20	
Contact Pad Width (X20)	X1			0.45
Contact Pad Length (X20)	Y1			1.75
Distance Between Pads	G	0.20		

Notes:

1. Dimensioning and tolerancing per ASME Y14.5M
   BSC: Basic Dimension. Theoretically exact value shown without tolerances.

Microchip Technology Drawing No. C04-2072B

20-Lead Plastic Small Outline (SO) - Wide, 7.50 mm Body [SOIC]

Note: For the most current package drawings, please see the Microchip Packaging Specification located at http://www.microchip.com/packaging

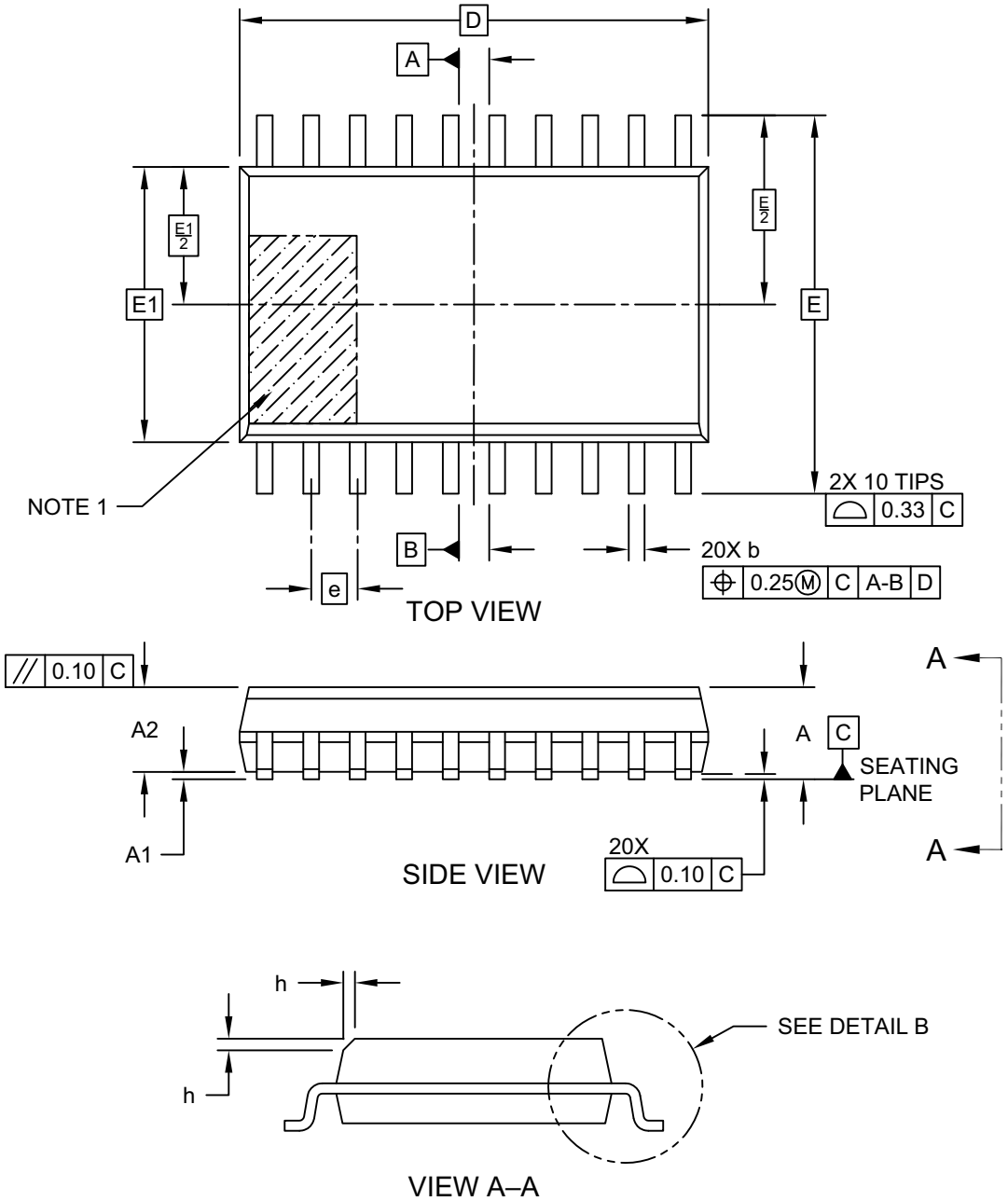

Microchip Technology Drawing C04-094 Rev D Sheet 1 of 2

20-Lead Plastic Small Outline (SO) - Wide, 7.50 mm Body [SOIC]

Note: For the most current package drawings, please see the Microchip Packaging Specification located at http://www.microchip.com/packaging

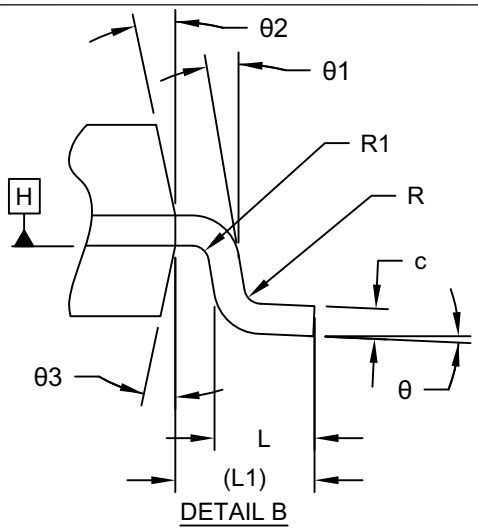

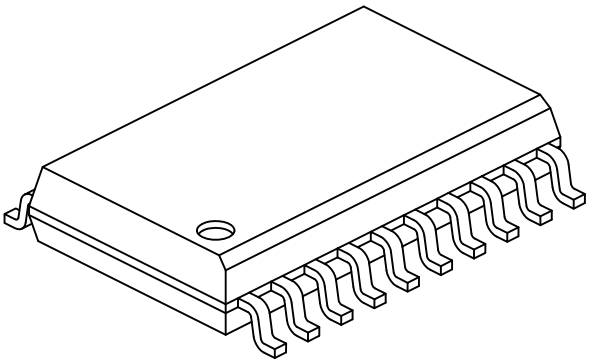

Units		MILLIMETERS		
Dimension Limits		MIN	NOM	MAX
Number of Terminals	N	20		
Pitch	e	1.27 BSC		
Overall Height	A	-	-	2.65
Standoff §	A1	0.10	-	0.30
Molded Package Thickness	A2	2.05	-	-
Overall Length	D	12.80 BSC		
Overall Width	E	10.30 BSC		
Molded Package Width	E1	7.50 BSC		
Terminal Width	b	0.31	-	0.51
Terminal Thickness	c	0.25	-	0.75
Corner Chamfer	h	0.25	-	0.41
Terminal Length	L	0.41	0.65	0.89
Footprint	L1	1.40 REF		
Lead Bend Radius	R1	0.07	-	-
Lead Bend Radius	R2	0.07	-	-
Foot Angle	θ	0°	-	8°
Lead Angle	θ1	0°	-	-
Mold Draft Angle	θ2	5°	-	15°
Mold Draft Angle	θ3	5°	-	15°

Notes:

1. Pin 1 visual index feature may vary, but must be located within the hatched area.
2. Dimensioning and tolerancing per ASME Y14.5M
   BSC: Basic Dimension. Theoretically exact value shown without tolerances.
   REF: Reference Dimension, usually without tolerance, for information purposes only.
3. Dimension D does not include mold flash, protrusions or gate burrs, which shall not exceed 0.15 mm per end. Dimension E1 does not include interlead flash or protrusion, which shall not exceed 0.25 mm per side.
4. § Significant Characteristic

Microchip Technology Drawing C04-094 Rev D Sheet 2 of 2

20-Lead Plastic Small Outline (SO) - Wide, 7.50 mm Body [SOIC]

Note: For the most current package drawings, please see the Microchip Packaging Specification located at http://www.microchip.com/packaging

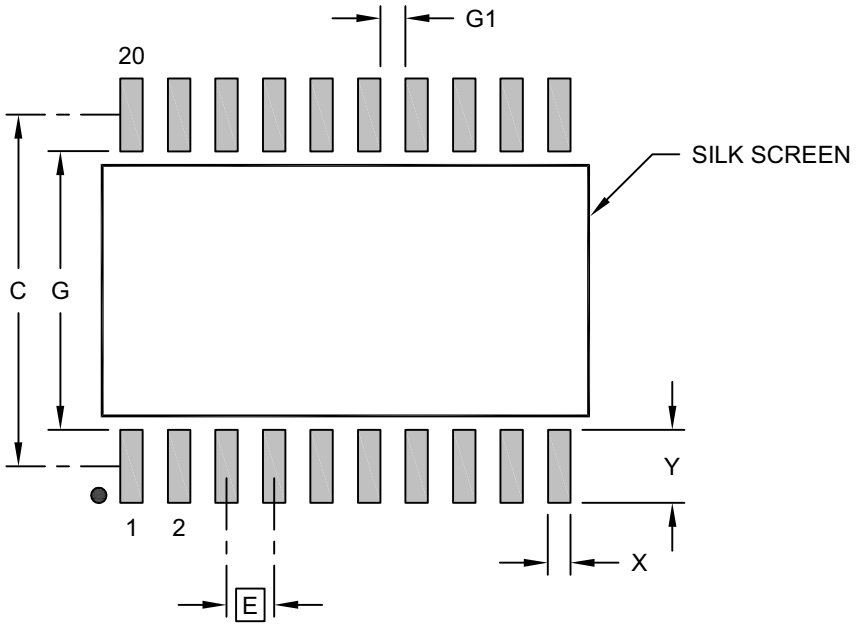

RECOMMENDED LAND PATTERN

Units		MILLIMETERS		
Dimension Limits		MIN	NOM	MAX
Contact Pitch	E	1.27 BSC		
Contact Pad Spacing	C		9.40	
Contact Pad Width (X20)	X			0.60
Contact Pad Length (X20)	Y			1.95
Contact Pad to Contact Pad	G	0.67		
Contact Pad to Contact Pad	G1	7.45		

Notes:

1. Dimensioning and tolerancing per ASME Y14.5M
   BSC: Basic Dimension. Theoretically exact value shown without tolerances.
2. For best soldering results, thermal vias, if used, should be filled or tented to avoid solder loss during reflow process

Microchip Technology Drawing C04-2094 Rev D

20-Lead Ultra Thin Plastic Quad Flat, No Lead Package (GZ) - 4x4x0.5 mm Body [UQFN]

Note: For the most current package drawings, please see the Microchip Packaging Specification located at http://www.microchip.com/packaging

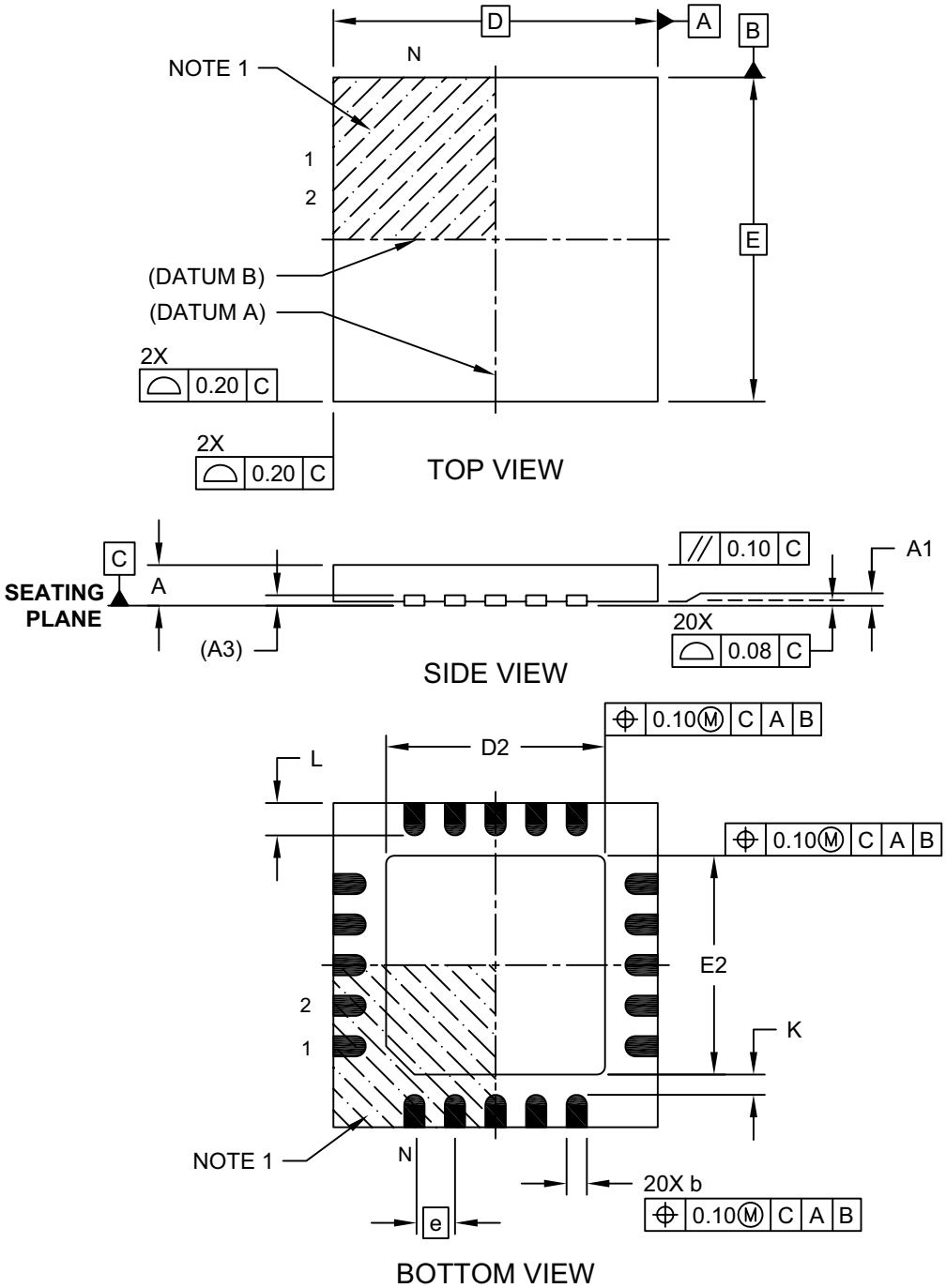

Microchip Technology Drawing C04-255A Sheet 1 of 2

20-Lead Ultra Thin Plastic Quad Flat, No Lead Package (GZ) - 4x4x0.5 mm Body [UQFN]

Note: For the most current package drawings, please see the Microchip Packaging Specification located at http://www.microchip.com/packaging

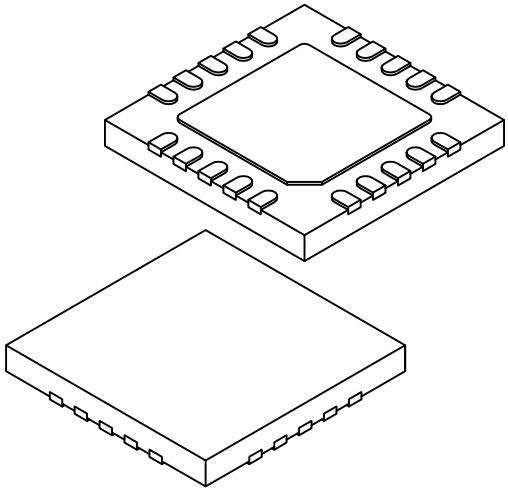

Units		MILLIMETERS		
Dimension Limits		MIN	NOM	MAX
Number of Terminals	N	20		
Pitch	e	0.50 BSC		
Overall Height	A	0.45	0.50	0.55
Standoff	A1	0.00	0.02	0.05
Terminal Thickness	A3	0.127 REF		
Overall Width	E	4.00 BSC		
Exposed Pad Width	E2	2.60	2.70	2.80
Overall Length	D	4.00 BSC		
Exposed Pad Length	D2	2.60	2.70	2.80
Terminal Width	b	0.20	0.25	0.30
Terminal Length	L	0.30	0.40	0.50
Terminal-to-Exposed-Pad	K	0.20	-	-

Notes:

1. Pin 1 visual index feature may vary, but must be located within the hatched area.
2. Package is saw singulated
3. Dimensioning and tolerancing per ASME Y14.5M
   BSC: Basic Dimension. Theoretically exact value shown without tolerances.
   REF: Reference Dimension, usually without tolerance, for information purposes only.

Microchip Technology Drawing C04-255A Sheet 2 of 2

20-Lead Ultra Thin Plastic Quad Flat, No Lead Package (GZ) - 4x4x0.5 mm Body [UQFN]

Note: For the most current package drawings, please see the Microchip Packaging Specification located at http://www.microchip.com/packaging

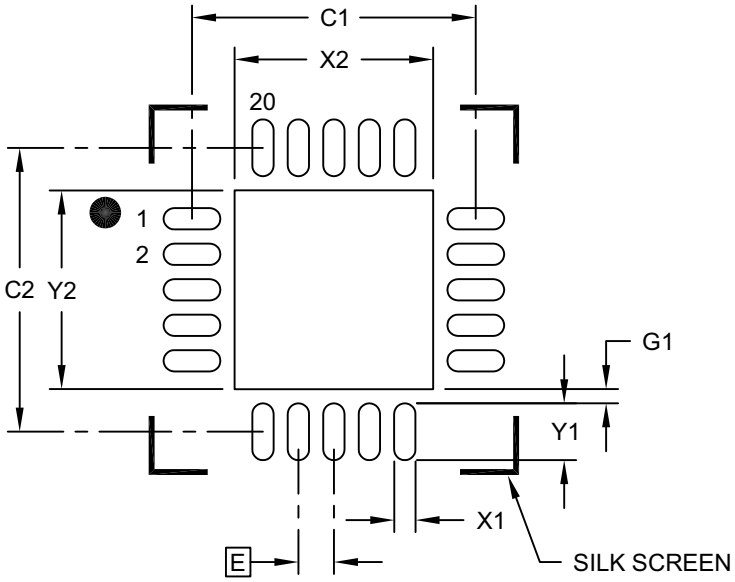

RECOMMENDED LAND PATTERN

Units		MILLIMETERS		
Dimension Limits		MIN	NOM	MAX
Contact Pitch	E		0.50 BSC	
Optional Center Pad Width	X2			2.80
Optional Center Pad Length	Y2			2.80
Contact Pad Spacing	C1		4.00	
Contact Pad Spacing	C2		4.00	
Contact Pad Width (X20)	X1			0.30
Contact Pad Length (X20)	Y1			0.80
Contact Pad to Center Pad (X20)	G1	0.20		

Notes:

1. Dimensioning and tolerancing per ASME Y14.5M
   BSC: Basic Dimension. Theoretically exact value shown without tolerances.

Microchip Technology Drawing C04-2255A

APPENDIX A: DATA SHEET REVISION HISTORY

Revision D (08/2021)

Updated terminology used throughout the data sheet: “master” replaced by “host”, and “slave” replaced by “client”. Replaced ADCRC appearances with FRC.

Updated Figures 30-1, 30-2, 30-3 and 30-4: CWGxISM replaced with CWG1DAT. Updated Tables 4-10, 29-2, 31-4, 36-3 and 37-6, and Figures 37-5, 37-9 and 37-11.

Revision C (06/2020)

Updated Memory section, section 4.2.3 and 40.1; Tables 2, 37-5, 37-11, and 37-13; Figures 37-10, 37-11. Other minor corrections.

Revision B (02/2019)

Updated the Cover Pages.

Updated Figures 24-2, 33-2, 33-5, 33-7, 33-8, and 33-12; Registers 5-1, 9-6, 23-4, 23-5, and 30-9; Sections 4.2.2, 20.2.4, 23-2, 23.6, 30.12, 33.1.2.2, 33.1.2.3, 33.1.2.7, 33.1.2.8, 33.1.2.9, 33.3.1, 33.3.2, 33.3.3, 33.3.3.1, 33.3.5, 33.4.1.5, 33.4.1.9, 33.4.2.3, 33.4.2.4, and 33.5.1; Tables 3, 4, 4-4, 9-1, 15-1, 15-2, 28-5, 29-3, 30-2, 30-3, 37-2, 37-3, 37-8, 37-12 and 37-14.

Added Table 37-26. Added Characterization Data.

Revision A (03/2017)

Initial release of the document.

THE MICROCHIP WEBSITE

Microchip provides online support via our WWW site at www.microchip.com. This website is used as a means to make files and information easily available to customers. Accessible by using your favorite Internet browser, the website contains the following information:

- **Product Support** – Data sheets and errata, application notes and sample programs, design resources, user's guides and hardware support documents, latest software releases and archived software
- **General Technical Support** – Frequently Asked Questions (FAQ), technical support requests, online discussion groups, Microchip consultant program member listing
- **Business of Microchip** – Product selector and ordering guides, latest Microchip press releases, listing of seminars and events, listings of Microchip sales offices, distributors and factory representatives

CUSTOMER CHANGE NOTIFICATION SERVICE

Microchip's customer notification service helps keep customers current on Microchip products. Subscribers will receive e-mail notification whenever there are changes, updates, revisions or errata related to a specified product family or development tool of interest.

To register, access the Microchip website at www.microchip.com. Under "Support", click on "Customer Change Notification" and follow the registration instructions.

CUSTOMER SUPPORT

Users of Microchip products can receive assistance through several channels:

- Distributor or Representative
- Local Sales Office
- Field Application Engineer (FAE)
- Technical Support

Customers should contact their distributor, representative or Field Application Engineer (FAE) for support. Local sales offices are also available to help customers. A listing of sales offices and locations is included in the back of this document.

Technical support is available through the website at: http://microchip.com/support

PRODUCT IDENTIFICATION SYSTEM

To order or obtain information, e.g., on pricing or delivery, refer to the factory or the listed sales office.

PART NO.	[X](1)	-	X	/XX	XXX
Device	Tape and Reel Option		Temperature Range	Package	Pattern

Device:	PIC16F15324, PIC16LF15324 PIC16F15344, PIC16LF15344	
Tape and Reel Option:	Blank T	= Standard packaging (tube or tray) = Tape and Reel(1)
Temperature Range:	I E	= -40°C to +85°C (Industrial) = -40°C to +125°C (Extended)
Package:(2)	JQ P SL SO SS ST GZ 7N	= 16-lead UQFN = 14-lead, 20-lead PDIP = 14-lead SOIC = 20-lead SOIC = 20-lead SSOP = 14-lead TSSOP = 20-lead UQFN = 16-lead VQFN (4x4)
Pattern:	QTP, SQTP, Code or Special Requirements (blank otherwise)	

Examples:

a) PIC16F15324- E/P
Extended temperature
PDIP package

Note 1: Tape and Reel identifier only appears in the catalog part number description. This identifier is used for ordering purposes and is not printed on the device package. Check with your Microchip Sales Office for package availability with the Tape and Reel option.

2: Small form-factor packaging options may be available. Check www.microchip.com/packaging for small-form factor package availability, or contact your local Sales Office.

Note the following details of the code protection feature on Microchip devices:

- Microchip products meet the specifications contained in their particular Microchip Data Sheet.
- Microchip believes that its family of products is secure when used in the intended manner and under normal conditions.
- There are dishonest and possibly illegal methods being used in attempts to breach the code protection features of the Microchip devices. We believe that these methods require using the Microchip products in a manner outside the operating specifications contained in Microchip's Data Sheets. Attempts to breach these code protection features, most likely, cannot be accomplished without violating Microchip's intellectual property rights.
- Microchip is willing to work with any customer who is concerned about the integrity of its code.
- Neither Microchip nor any other semiconductor manufacturer can guarantee the security of its code. Code protection does not mean that we are guaranteeing the product is "unbreakable." Code protection is constantly evolving. We at Microchip are committed to continuously improving the code protection features of our products. Attempts to break Microchip's code protection feature may be a violation of the Digital Millennium Copyright Act. If such acts allow unauthorized access to your software or other copyrighted work, you may have a right to sue for relief under that Act.

Information contained in this publication is provided for the sole purpose of designing with and using Microchip products. Information regarding device applications and the like is provided only for your convenience and may be superseded by updates. It is your responsibility to ensure that your application meets with your specifications.

THIS INFORMATION IS PROVIDED BY MICROCHIP "AS IS". MICROCHIP MAKES NO REPRESENTATIONS OR WARRANTIES OF ANY KIND WHETHER EXPRESS OR IMPLIED, WRITTEN OR ORAL, STATUTORY OR OTHERWISE, RELATED TO THE INFORMATION INCLUDING BUT NOT LIMITED TO ANY IMPLIED WARRANTIES OF NON-INFRINGEMENT, MERCHANTABILITY, AND FITNESS FOR A PARTICULAR PURPOSE OR WARRANTIES RELATED TO ITS CONDITION, QUALITY, OR PERFORMANCE.

IN NO EVENT WILL MICROCHIP BE LIABLE FOR ANY INDIRECT, SPECIAL, PUNITIVE, INCIDENTAL OR CONSEQUENTIAL LOSS, DAMAGE, COST OR EXPENSE OF ANY KIND WHATSOEVER RELATED TO THE INFORMATION OR ITS USE, HOWEVER CAUSED, EVEN IF MICROCHIP HAS BEEN ADVISED OF THE POSSIBILITY OR THE DAMAGES ARE FORESEEABLE. TO THE FULLEST EXTENT ALLOWED BY LAW, MICROCHIP'S TOTAL LIABILITY ON ALL CLAIMS IN ANY WAY RELATED TO THE INFORMATION OR ITS USE WILL NOT EXCEED THE AMOUNT OF FEES, IF ANY, THAT YOU HAVE PAID DIRECTLY TO MICROCHIP FOR THE INFORMATION. Use of Microchip devices in life support and/or safety applications is entirely at the buyer's risk, and the buyer agrees to defend, indemnify and hold harmless Microchip from any and all damages, claims, suits, or expenses resulting from such use. No licenses are conveyed, implicitly or otherwise, under any Microchip intellectual property rights unless otherwise stated.

For information regarding Microchip's Quality Management Systems, please visit www.microchip.com/quality.

Trademarks

The Microchip name and logo, the Microchip logo, Adaptec, AnyRate, AVR, AVR logo, AVR Freaks, BesTime, BitCloud, chipKIT, chipKIT logo, CryptoMemory, CryptoRF, dsPIC, FlashFlex, flexPWR, HELDO, IGLOO, JukeBlox, KeeLoq, Kleer, LANCheck, LinkMD, maXStylus, maXTouch, MediaLB, megaAVR, Microsemi, Microsemi logo, MOST, MOST logo, MPLAB, OptoLyzer, PackeTime, PIC, picoPower, PICSTART, PIC32 logo, PolarFire, Prochip Designer, QTouch, SAM-BA, SenGenuity, SpyNIC, SST, SST Logo, SuperFlash, Symmetricom, SyncServer, Tachyon, TempTrackr, TimeSource, tinyAVR, UNI/O, Vectron, and XMEGA are registered trademarks of Microchip Technology Incorporated in the U.S.A. and other countries.

APT, ClockWorks, The Embedded Control Solutions Company, EtherSynch, FlashTec, Hyper Speed Control, HyperLight Load, IntelliMOS, Libero, motorBench, mTouch, Powermite 3, Precision Edge, ProASIC, ProASIC Plus, ProASIC Plus logo, Quiet-Wire, SmartFusion, SyncWorld, Temux, TimeCesium, TimeHub, TimePictra, TimeProvider, Vite, WinPath, and ZL are registered trademarks of Microchip Technology Incorporated in the U.S.A.

Adjacent Key Suppression, AKS, Analog-for-the-Digital Age, Any Capacitor, AnyIn, AnyOut, BlueSky, BodyCom, CodeGuard, CryptoAuthentication, CryptoAutomotive, CryptoCompanion, CryptoController, dsPICDEM, dsPICDEM.net, Dynamic Average Matching, DAM, ECAN, EtherGREEN, In-Circuit Serial Programming, ICSP, INICnet, Inter-Chip Connectivity, JitterBlocker, KleerNet, KleerNet logo, memBrain, Mindi, MiWi, MPASM, MPF, MPLAB Certified logo, MPLIB, MPLINK, MultiTRAK, NetDetach, Omniscient Code Generation, PICDEM, PICDEM.net, PICkit, PICtail, PowerSmart, PureSilicon, QMatrix, REAL ICE, Ripple Blocker, SAM-ICE, Serial Quad I/O, SMART-I.S., SQI, SuperSwitcher, SuperSwitcher II, Total Endurance, TSHARC, USBCheck, VariSense, ViewSpan, WiperLock, Wireless DNA, and ZENA are trademarks of Microchip Technology Incorporated in the U.S.A. and other countries.

SQTP is a service mark of Microchip Technology Incorporated in the U.S.A.

The Adaptec logo, Frequency on Demand, Silicon Storage Technology, and Symmcom are registered trademarks of Microchip Technology Inc. in other countries.

GestIC is a registered trademark of Microchip Technology Germany II GmbH & Co. KG, a subsidiary of Microchip Technology Inc., in other countries.

All other trademarks mentioned herein are property of their respective companies.

© 2017-2021, Microchip Technology Incorporated, All Rights Reserved.

ISBN: 978-1-5224-8784-5

Worldwide Sales and Service

AMERICAS

Corporate Office
2355 West Chandler Blvd.
Chandler, AZ 85224-6199
Tel: 480-792-7200
Fax: 480-792-7277
Technical Support:
http://www.microchip.com/support
Web Address:
www.microchip.com

Atlanta
Duluth, GA
Tel: 678-957-9614
Fax: 678-957-1455

Austin, TX
Tel: 512-257-3370

Boston
Westborough, MA
Tel: 774-760-0087
Fax: 774-760-0088

Chicago
Itasca, IL
Tel: 630-285-0071
Fax: 630-285-0075

Dallas
Addison, TX
Tel: 972-818-7423
Fax: 972-818-2924

Detroit
Novi, MI
Tel: 248-848-4000

Houston, TX
Tel: 281-894-5983

Indianapolis
Noblesville, IN
Tel: 317-773-8323
Fax: 317-773-5453
Tel: 317-536-2380

Los Angeles
Mission Viejo, CA
Tel: 949-462-9523
Fax: 949-462-9608
Tel: 951-273-7800

Raleigh, NC
Tel: 919-844-7510

New York, NY
Tel: 631-435-6000

San Jose, CA
Tel: 408-735-9110
Tel: 408-436-4270

Canada - Toronto
Tel: 905-695-1980
Fax: 905-695-2078

ASIA/PACIFIC

Australia - Sydney
Tel: 61-2-9868-6733

China - Beijing
Tel: 86-10-8569-7000

China - Chengdu
Tel: 86-28-8665-5511

China - Chongqing
Tel: 86-23-8980-9588

China - Dongguan
Tel: 86-769-8702-9880

China - Guangzhou
Tel: 86-20-8755-8029

China - Hangzhou
Tel: 86-571-8792-8115

China - Hong Kong SAR
Tel: 852-2943-5100

China - Nanjing
Tel: 86-25-8473-2460

China - Qingdao
Tel: 86-532-8502-7355

China - Shanghai
Tel: 86-21-3326-8000

China - Shenyang
Tel: 86-24-2334-2829

China - Shenzhen
Tel: 86-755-8864-2200

China - Suzhou
Tel: 86-186-6233-1526

China - Wuhan
Tel: 86-27-5980-5300

China - Xian
Tel: 86-29-8833-7252

China - Xiamen
Tel: 86-592-2388138

China - Zhuhai
Tel: 86-756-3210040

ASIA/PACIFIC

India - Bangalore
Tel: 91-80-3090-4444

India - New Delhi
Tel: 91-11-4160-8631

India - Pune
Tel: 91-20-4121-0141

Japan - Osaka
Tel: 81-6-6152-7160

Japan - Tokyo
Tel: 81-3-6880- 3770

Korea - Daegu
Tel: 82-53-744-4301

Korea - Seoul
Tel: 82-2-554-7200

Malaysia - Kuala Lumpur
Tel: 60-3-7651-7906

Malaysia - Penang
Tel: 60-4-227-8870

Philippines - Manila
Tel: 63-2-634-9065

Singapore
Tel: 65-6334-8870

Taiwan - Hsin Chu
Tel: 886-3-577-8366

Taiwan - Kaohsiung
Tel: 886-7-213-7830

Taiwan - Taipei
Tel: 886-2-2508-8600

Thailand - Bangkok
Tel: 66-2-694-1351

Vietnam - Ho Chi Minh
Tel: 84-28-5448-2100

EUROPE

Austria - Wels
Tel: 43-7242-2244-39
Fax: 43-7242-2244-393

Denmark - Copenhagen
Tel: 45-4485-5910
Fax: 45-4485-2829

Finland - Espoo
Tel: 358-9-4520-820

France - Paris
Tel: 33-1-69-53-63-20
Fax: 33-1-69-30-90-79

Germany - Garching
Tel: 49-8931-9700

Germany - Haan
Tel: 49-2129-3766400

Germany - Heilbronn
Tel: 49-7131-72400

Germany - Karlsruhe
Tel: 49-721-625370

Germany - Munich
Tel: 49-89-627-144-0
Fax: 49-89-627-144-44

Germany - Rosenheim
Tel: 49-8031-354-560

Israel - Ra'anana
Tel: 972-9-744-7705

Italy - Milan
Tel: 39-0331-742611
Fax: 39-0331-466781

Italy - Padova
Tel: 39-049-7625286

Netherlands - Drunen
Tel: 31-416-690399
Fax: 31-416-690340

Norway - Trondheim
Tel: 47-7288-4388

Poland - Warsaw
Tel: 48-22-3325737

Romania - Bucharest
Tel: 40-21-407-87-50

Spain - Madrid
Tel: 34-91-708-08-90
Fax: 34-91-708-08-91

Sweden - Gothenberg
Tel: 46-31-704-60-40

Sweden - Stockholm
Tel: 46-8-5090-4654

UK - Wokingham
Tel: 44-118-921-5800
Fax: 44-118-921-5820

© 2017-2021 Microchip Technology Inc.

Pin Diagrams 5
Pin Allocation Tables 7
Device Overview 13
Guidelines for Getting Started with PIC16(L)F15324/44 Microcontrollers 26
Enhanced Mid-Range CPU 29
Memory Organization 31
Device Configuration 79
Device Information Area 90
Device Configuration Information 92
Resets 93
Oscillator Module (with Fail-Safe Clock Monitor) 104
Interrupts 121
Power-Saving Operation Modes 143
Windowed Watchdog Timer (WWDT) 150
Nonvolatile Memory (NVM) Control 158
I/O Ports 176
Peripheral Pin Select (PPS) Module 194
Peripheral Module Disable 204
Interrupt-On-Change 212
Fixed Voltage Reference (FVR) 221
Temperature Indicator Module 224
Analog-to-Digital Converter (ADC) Module 226
5-Bit Digital-to-Analog Converter (DAC1) Module 240
Numerically Controlled Oscillator (NCO) Module 245
Comparator Module 255
Zero-Cross Detection (ZCD) Module 265
Timer0 Module 271
Timer1 Module with Gate Control 277
Timer2 Module With Hardware Limit Timer (HLT) 290
Capture/Compare/PWM Modules 315
Pulse-Width Modulation (PWM) 327
Complementary Waveform Generator (CWG) Module 334
Configurable Logic Cell (CLC) 359
Host Synchronous Serial Port (MSSP1) Module 376
Enhanced Universal Synchronous Asynchronous Receiver Transmitter (EUSART) 427
Reference Clock Output Module 455
In-Circuit Serial Programming™ (ICSP™) 459
Instruction Set Summary 461
Electrical Specifications 474
DC and AC Characteristics Graphs and Charts 503
Development Support 524
Packaging Information 525
Appendix A: Data Sheet Revision History 551
The Microchip Website 552
Customer Change Notification Service 552
Customer Support 552
Product Identification System 553