dsPIC33CK512MP608

dsPIC33CK512MP608 Motor Control Plug-In Module (PIM) Information Sheet for Internal Amplifier Configuration

The dsPIC33CK512MP608 Internal Op Amp Motor Control PIM (P/N: EV33R40A) is designed to demonstrate the motor control capabilities of the dsPIC33CK512MP608 device using the internal op amps of the device.

The dsPIC33CK512MP608 device is a high-performance, 16-bit Digital Signal Controller (DSC). This Motor Control PIM is designed to take advantage of the high-speed PWM module. The PWM, along with other peripherals, such as the ADC, and operational amplifiers in the device enable various motor control applications.

The PIM can be used to demonstrate and develop motor control applications by inserting it in the 100-pin PIM interface header provided on the compatible motor control development boards (see Table 1). The PIM is designed to run a single motor with all the compatible development boards. When operating this PIM on the dsPICDEM™ MCLV-2 Development Board, insert an internal op amp configuration matrix board (see Figure 2) on the J14 header provided on the board. In the case of dsPICDEM MCHV-2/MCHV-3 Development Boards, insert an internal op amp configuration matrix board onto the J4 header (as shown in Figure 2) on the board. This PIM can be used on the dsPICDEM MCHV-3 Development Board to implement and demonstrate single-stage boost Power Factor Correction (PFC) control, along with Field-Oriented Control (FOC). For additional information regarding development boards, refer to the respective user's guide available on the Microchip website (www.microchip.com). Table 1 provides information on the hardware versions of the motor control boards that are compatible with this PIM.

Refer to the specific motor control board user's guide for the hardware version identification information.

FIGURE 1: dsPIC33CK512MP608 INTERNAL OP AMP MOTOR CONTROL PIM (P/N: EV33R40A)

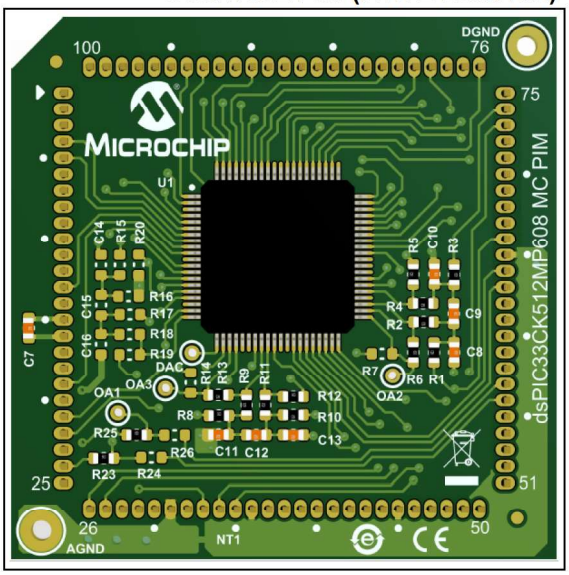

FIGURE 2: INTERNAL OP AMP CONFIGURATION BOARD



© 2021 Microchip Technology Inc.

TABLE 1: HARDWARE COMPATIBILITY

Compatible Development Board	Part Number	Compatible Hardware Revision
dsPICDEM™ MCHV Development Board	DM330023	Not Compatible
dsPICDEM MCHV-2 Development Board	DM330023-2	All Revisions
dsPICDEM MCHV-3 Development Board	DM330023-3	All Revisions
dsPICDEM MCLV Development Board	DM330021	Not Compatible
dsPICDEM MCLV-2 Development Board	DM330021-2	All Revisions
Low-Voltage Motor Control Development Bundle	DV330100	All Revisions
dsPICDEM MCSM Development Board	DM330022/DM330022-1	All Revisions

WARNING

Do not connect non-isolated oscilloscope probes to the test points on the PIM when inserted and in use with the dsPICDEM™ MCHV-2 or MCHV-3 Development Board. Failure to heed this warning could result in hardware damage.

© 2021 Microchip Technology Inc.

Table 2 provides pin mapping from the 80-pin dsPIC33CK512MP608 device to the PIM interface connector.

TABLE 2: DEVICE TO PIM MAPPING (ORDERED BY DEVICE PIN NUMBER)

Device Pin #	PIM Pin #	dsPIC33CK512MP608 Device Functional Description	Remarks
1	PIM:94	RP46/PWM1H/PMD5/RB14	Direct Connection
2	PIM:22	AN20/ANC0/CMP5C/RE0	Direct Connection
3	PIM:93	RP47/PWM1L/PMD6/RB15	Direct Connection
4	PIM:21	AN21/ANC1/CMP6B/RE1	Direct Connection
5	PIM:09	RP60/PWM8H/PMD7/RC12	Direct Connection
6	PIM:08	RP61/PWM8L/PMA5/RC13	Direct Connection
7	PIM:04	RP62/PWM6H/PMA4/RC14	Direct Connection
8	PIM:05	RP63/PWM6L/PMA3/RC15	Direct Connection
9	PIM:13	$\overline{\text{MCLR}}$	$\overline{\text{MCLR}}$
10	PIM:19	RP79/PCI22/PMA2/RD15	Direct Connection
11	PIM:15, 36, 65, 75(4)	VSS	Digital Ground (DGND)
12	PIM:02, 16, 37, 62, 86(3)	VDD	Digital Power (DVDD)
13	PIM:92	RP78/PCI21/RD14	Direct Connection
14	PIM:89	ANN4/CMP5B/RP77/RD13	Direct Connection
15	PIM:55	AN12/ANN0/RP48/RC0	Direct Connection
16	PIM:25(1)	OA1OUT/AN0/CMP1A/IBIAS0/RA0	Connected via 0R Resistor
16	PIM:57(2)	OA1OUT/AN0/CMP1A/IBIAS0/RA0	Can be connected via 0R Resistor
17	PIM:20	AN22/ANB3/CMP6C/RE2	Direct Connection
18	PIM:24(1)	OA1IN-/ANA1/RA1	Connected via 0R Resistor
18	PIM:56(2)	OA1IN-/ANA1/RA1	Can be connected via 0 Ohm Resistor
18	PIM:67	OA1IN-/ANA1/RA1	Optional Internal Op Amp Connection
19	PIM:33	AN23/ANN3/RE3	Direct Connection
20	PIM:66	OA1IN+/AN9/PMA6/RA2	Optional Internal Op Amp Connection
21	PIM:12	DACOUT1/AN27/AN3/CMP1C/RA3	Direct Connection
22	PIM:69	RE4	Direct Connection
23	PIM:21(2)	OA3OUT/AN4/ANB1/ANB2/CMP3B/IBIAS3/RA4	Can be connected via 0R Resistor
24	PIM:68	RE5	Direct Connection
25	PIM:30	AVDD	Analog Power (AVDD)
26	PIM:31	AVSS	Analog Ground (AGND)
27	PIM:85	RP76/RD12	Direct Connection
28	PIM:66	OA3IN-/AN13/CMP1B/ISRC0/RP49/PMA7/RC1	Internal Op Amp Connection
29	PIM:73	OA3IN+/AN14/CMP2B/ISRC1/RP50/PMD13/ PMA13/RC2	Internal Op Amp Connection
30	PIM:43	AN17/ANN1/CMP4B/IBIAS1/RP54/PMD12/PMA12/ RC6	Direct Connection
31	PIM:02, 16, 37, 62, 86(3)	VDD	Digital Power (DVDD)
32	PIM:15, 36, 65, 75(4)	VSS	Digital Ground (DGND)
33	PIM:23	AN15/ANN2/CMP2A/IBIAS2/RP51/PMD11/PMA11/ RC3	Direct Connection
34	PIM:63	OSCI/CLKI/AN5/RP32/PMD10/PMA10/RB0	Direct Connection

Note 1: The PIM pin is directly connected to the device pin through a 0 Ohm resistor (default), which can be removed if desired.

2: The PIM pin can be connected to a device pin through a 0 Ohm resistor, if required. For proper operation, ensure that other 0 Ohm resistors connecting to the same device pin are removed.

3: Digital Power (DVDD) pins are shorted together on the PIM.

4: Digital Ground (DGND) pins are shorted together on the PIM.

© 2021 Microchip Technology Inc.

TABLE 2: DEVICE TO PIM MAPPING (ORDERED BY DEVICE PIN NUMBER) (CONTINUED)

Device Pin #	PIM Pin #	dsPIC33CK512MP608 Device Functional Description	Remarks
35	PIM:64	OSCO/CLKO/AN6/RP33/PMA1/PMALH/PSA1/RB1	Direct Connection
36	PIM:32	AN19/ANB0/CMP2C/RP75/PMA0/PMALL/PSA0/ RD11	Direct Connection
37	PIM:11	RE6	Direct Connection
38	PIM:35	AN18/ANC2/CMP3C/ISRC3/RP74/PMD9/PMA9/ RD10	Direct Connection
39	PIM:84	RE7	Direct Connection
40	PIM:79	DACOUT2/AN16/CMP4C/ISRC2/RP55/PMD8/ PMA8/RC7	Direct Connection
41	PIM:22(2)	OA2OUT/AN1/AN7/ANA0/CMP1D/CMP2D/ CMP3D/CMP4D/CMP5D/CMP6D/RP34/SCL3/ INT0/RB2	Can be connected via 0R Resistor
42	PIM:60	RE8	Direct Connection
43	PIM:66	PGD2/OA2IN-/AN8/CMP4A/RP35/RB3	Internal Op Amp Connection
44	PIM:01	RE9	Direct Connection
45	PIM:74	PGC2/OA2IN+/RP36/RB4	Internal Op Amp Connection
46	PIM:95	RP56/ASDA1/SCK2/RC8	Direct Connection
47	PIM:96	RP57/ASCL1/SDI2/RC9	Direct Connection
48	PIM:10	RP73/PCI20/RD9	Direct Connection
49	PIM:18	RP72/SDO2/PCI19/RD8	Direct Connection
50	PIM:15, 36, 65, 75(4)	VSS	Digital Ground (DGND)
51	PIM:02, 16, 37, 62, 86(3)	VDD	Digital Power (DVDD)
52	PIM:49	RP71/PMD15/RD7	Direct Connection
53	PIM:50	RP70/PMD14/RD6	Direct Connection
54	PIM:83	RP69/PMA15/PMCS2/RD5	Direct Connection
55	PIM:27	PGD3/RP37/SDA2/PMA14/PMCS1/PSCS/RB5	Direct Connection
56	PIM:26	PGC3/RP38/SCL2/RB6	Direct Connection
57	PIM:40	RE10	Direct Connection
58	PIM:14	TDO/AN2/AN26/CMP3A/RP39/SDA3/RB7	Direct Connection
59	PIM:41	RE11	Direct Connection
60	PIM:17	PGD1/AN10/CMP6A/RP40/SCL1/RB8	Direct Connection
61	PIM:25	PGC1/AN11/CMP5A/RP41/SDA1/RB9	Direct Connection
62	PIM:59	RE12	Direct Connection
63	PIM:76	RP52/PWM5H/ASDA2/RC4	Direct Connection
64	PIM:34	RE13	Direct Connection
65	PIM:54	RP53/PWM5L/ASCL2/PMWR/PMENB/PSWR/RC5	Direct Connection
66	PIM:07	RP58/PWM7H/PMRD/$\overline{\text{PMWR}}$/PSRD/RC10	Direct Connection
67	PIM:06	RP59/PWM7L/RC11	Direct Connection
68	PIM:61	RP68/ASDA3/RD4	Direct Connection
69	PIM:48	RP67/ASCL3/RD3	Direct Connection
70	PIM:15, 36, 65, 75(4)	VSS	Digital Ground (DGND)
71	PIM:02, 16, 37, 62, 86(3)	VDD	Digital Power (DVDD)
72	PIM:47	RP66/RD2	Direct Connection
73	PIM:80	RP65/PWM4H/RD1	Direct Connection

Note 1: The PIM pin is directly connected to the device pin through a 0 Ohm resistor (default), which can be removed if desired.

2: The PIM pin can be connected to a device pin through a 0 Ohm resistor, if required. For proper operation, ensure that other 0 Ohm resistors connecting to the same device pin are removed.

3: Digital Power (DVDD) pins are shorted together on the PIM.

4: Digital Ground (DGND) pins are shorted together on the PIM.

© 2021 Microchip Technology Inc.

TABLE 2: DEVICE TO PIM MAPPING (ORDERED BY DEVICE PIN NUMBER) (CONTINUED)

Device Pin #	PIM Pin #	dsPIC33CK512MP608 Device Functional Description	Remarks
74	PIM:78	RP64/PWM4L/PMD0/RD0	Direct Connection
75	PIM:03	TMS/RP42/PWM3H/PMD1/RB10	Direct Connection
76	PIM:100	TCK/RP43/PWM3L/PMD2/RB11	Direct Connection
77	PIM:82	RE14	Direct Connection
78	PIM:99	TDI/RP44/PWM2H/PMD3/RB12	Direct Connection
79	PIM:90	RE15	Direct Connection
80	PIM:98	RP45/PWM2L/PMD4/RB13	Direct Connection

Note 1: The PIM pin is directly connected to the device pin through a 0 Ohm resistor (default), which can be removed if desired.

2: The PIM pin can be connected to a device pin through a 0 Ohm resistor, if required. For proper operation, ensure that other 0 Ohm resistors connecting to the same device pin are removed.

3: Digital Power (DV_{DD}) pins are shorted together on the PIM.

4: Digital Ground (DGND) pins are shorted together on the PIM.

Table 3 provides pin mapping from the PIM interface connector to the 80-pin dsPIC33CK512MP608 device.

TABLE 3: PIM TO DEVICE MAPPING (ORDERED BY PIM PIN NUMBER)

PIM Pin #	Device Pin #	Remarks	dsPIC33CK512MP608 Device Functional Description
PIM:01	44	Direct Connection	RE9
PIM:02(3)	12, 31, 51, 71	Digital Power (DVDD)	—
PIM:03	75	Direct Connection	TMS/RP42/PWM3H/PMD1/RB10
PIM:04	7	Direct Connection	RP62/PWM6H/PMA4/RC14
PIM:05	8	Direct Connection	RP63/PWM6L/PMA3/RC15
PIM:06	67	Direct Connection	RP59/PWM7L/RC11
PIM:07	66	Direct Connection	RP58/PWM7H/PMRD/$\overline{\text{PMWR}}$/PSRD/RC10
PIM:08	6	Direct Connection	RP61/PWM8L/PMA5/RC13
PIM:09	5	Direct Connection	RP60/PWM8H/PMD7/RC12
PIM:10	48	Direct Connection	RP73/PCI20/RD9
PIM:11	37	Direct Connection	RE6
PIM:12	21	Direct Connection	DACOUT1/AN27/AN3/CMP1C/RA3
PIM:13	9	$\overline{\text{MCLR}}$	$\overline{\text{MCLR}}$
PIM:14	58	Direct Connection	TDO/AN2/AN26/CMP3A/RP39/SDA3/RB7
PIM:15(4)	11, 32, 50, 70	Digital Ground (DGND)	VSS
PIM:16(3)	12, 31, 51, 71	Digital Power (DVDD)	VDD
PIM:17	60	Direct Connection	PGD1/AN10/CMP6A/RP40/SCL1/RB8
PIM:18	49	Direct Connection	RP72/SDO2/PCI19/RD8
PIM:19	10	Direct Connection	RP79/PCI22/PMA2/RD15
PIM:20	17	Direct Connection	AN22/ANB3/CMP6C/RE2
PIM:21	4	Direct Connection	AN21/ANC1/CMP6B/RE1
PIM:21(2)	23	Can be connected via 0R Resistor	OA3OUT/AN4/ANB1/ANB2/CMP3B/IBIAS3/RA4
PIM:22	2	Direct Connection	AN20/ANC0/CMP5C/RE0
PIM:22(2)	41	Can be connected via 0R Resistor	OA2OUT/AN1/AN7/ANA0/ANA2/ANA3/CMP1D/ CMP2D/CMP3D/CMP4D/CMP5D/CMP6D/RP34/ SCL3/INT0/RB2
PIM:23	33	Direct Connection	AN15/ANN2/CMP2A/IBIAS2/RP51/PMD11/ PMA11/RC3
PIM:24(1)	18	Connected via 0R Resistor	OA1IN-/ANA1/RA1
PIM:25	61	Direct Connection	PGC1/AN11/CMP5A/RP41/SDA1/RB9
PIM:25(1)	16	Connected via 0R Resistor	OA1OUT/AN0/CMP1A/IBIAS0/RA0
PIM:26	56	Direct Connection	PGC3/RP38/SCL2/RB6
PIM:27	55	Direct Connection	PGD3/RP37/SDA2/PMA14/PMCS1/PSCS/RB5
PIM:28	—	Not Connected	—
PIM:29	—	Not Connected	—
PIM:30	25	Analog Power (AVDD)	AVDD
PIM:31(5)	26	Analog Ground (AGND)	AVSS

Note 1: The PIM pin is directly connected to the device pin through a 0 Ohm resistor (default), which can be removed if desired.

2: The PIM pin can be connected to a device pin through a 0 Ohm resistor, if required. For proper operation, ensure that other 0 Ohm resistors connecting to the same device pin are removed.

3: Digital Power (DVDD) pins are shorted together on the PIM.

4: Digital Ground (DGND) pins are shorted together on the PIM.

5: Analog Ground (AGND) connection via PIM:31 is shorted with Digital Ground (DGND) through 0R resistor, R27, on the PIM.

© 2021 Microchip Technology Inc.

TABLE 3: PIM TO DEVICE MAPPING (ORDERED BY PIM PIN NUMBER) (CONTINUED)

PIM Pin #	Device Pin #	Remarks	dsPIC33CK512MP608 Device Functional Description
PIM:32	36	Direct Connection	AN19/ANB0/CMP2C/RP75/PMA0/PMALL/PSA0/RD11
PIM:33	19	Direct Connection	AN23/ANN3/RE3
PIM:34	64	Direct Connection	RE13
PIM:35	38	Direct Connection	AN18/ANC2/CMP3C/ISRC3/RP74/PMD9/PMA9/RD10
PIM:36(4)	11, 32, 50, 50	Digital Ground (DGND)	VSS
PIM:37(3)	12, 31, 51, 71	Digital Power (DVDD)	VDD
PIM:38	—	Not Connected	—
PIM:39	—	Not Connected	—
PIM:40	57	Direct Connection	RE10
PIM:41	59	Direct Connection	RE11
PIM:42	—	Not Connected	—
PIM:43	30	Direct Connection	AN17/ANN1/CMP4B/IBIAS1/RP54/PMD12/PMA12/RC6
PIM:44	—	Not Connected	—
PIM:45	—	Not Connected	—
PIM:46	—	Not Connected	—
PIM:47	72	Direct Connection	RP66/RD2
PIM:48	69	Direct Connection	RP67/ASCL3/RD3
PIM:49	52	Direct Connection	RP71/PMD15/RD7
PIM:50	53	Direct Connection	RP70/PMD14/RD6
PIM:51	—	Not Connected	—
PIM:52	—	Not Connected	—
PIM:53	—	Not Connected	—
PIM:54	65	Direct Connection	RP53/PWM5L/ASCL2/PMWR/PMENB/PSWR/RC5
PIM:55	15	Direct Connection	AN12/ANN0/RP48/RC0
PIM:56(2)	18	Can be connected via 0R Resistor	OA1IN-/ANA1/RA1
PIM:57(2)	16	Can be connected via 0R Resistor	OA1OUT/AN0/CMP1A/IBIAS0/RA0
PIM:58	—	Not Connected	—
PIM:59	62	Direct Connection	RE12
PIM:60	42	Direct Connection	RE8
PIM:61	68	Direct Connection	RP68/ASDA3/RD4
PIM:62(3)	12, 31, 51, 71	Digital Power (DVDD)	VDD
PIM:63	34	Direct Connection	OSCI/CLKI/AN5/RP32/PMD10/PMA10/RB0
PIM:64	35	Direct Connection	OSCO/CLKO/AN6/RP33/PMA1/PMALH/PSA1/RB1
PIM:65(4)	11, 32, 50, 70	Digital Ground (DGND)	VSS
PIM:66	20, 28, 43	Internal Op Amp Connection	Op Amp Inputs

Note 1: The PIM pin is directly connected to the device pin through a 0 Ohm resistor (default), which can be removed if desired.

2: The PIM pin can be connected to a device pin through a 0 Ohm resistor, if required. For proper operation, ensure that other 0 Ohm resistors connecting to the same device pin are removed.

3: Digital Power (DVDD) pins are shorted together on the PIM.

4: Digital Ground (DGND) pins are shorted together on the PIM.

5: Analog Ground (AGND) connection via PIM:31 is shorted with Digital Ground (DGND) through 0R resistor, R27, on the PIM.

TABLE 3: PIM TO DEVICE MAPPING (ORDERED BY PIM PIN NUMBER) (CONTINUED)

PIM Pin #	Device Pin #	Remarks	dsPIC33CK512MP608 Device Functional Description
PIM:67	18	Internal Op Amp Connection	Op Amp Inputs
PIM:68	24	Direct Connection	RE5
PIM:69	22	Direct Connection	RE4
PIM:70	—	Not Connected	—
PIM:71	—	Not Connected	—
PIM:72	—	Not Connected	—
PIM:73	29	Internal Op Amp Connection	Op Amp Inputs
PIM:74	45	Internal Op Amp Connection	Op Amp Inputs
PIM:75(4)	11, 32, 50, 70	Digital Ground (DGND)	VSS
PIM:76	63	Direct Connection	RP52/PWM5H/ASDA2/RC4
PIM:77	—	Not Connected	—
PIM:78	74	Direct Connection	RP64/PWM4L/PMD0/RD0
PIM:79	40	Direct Connection	DACOUT2/AN16/CMP4C/ISRC2/RP55/PMD8/PMA8/RC7
PIM:80	73	Direct Connection	RP65/PWM4H/RD1
PIM:81	—	Not Connected	—
PIM:82	77	Direct Connection	RE14
PIM:83	54	Direct Connection	RP69/PMA15/PMCS2/RD5
PIM:84	39	Direct Connection	RE7
PIM:85	27	Direct Connection	RP76/RD12
PIM:86(3)	12, 31, 51, 71	Digital Power (DVDD)	VDD
PIM:87	—	Not Connected	—
PIM:88	—	Not Connected	—
PIM:89	14	Direct Connection	ANN4/CMP5B/RP77/RD13
PIM:90	79	Direct Connection	RE15
PIM:91	—	Not Connected	—
PIM:92	13	Direct Connection	RP78/PCI21/RD14
PIM:93	3	Direct Connection	RP47/PWM1L/PMD6/RB15
PIM:94	1	Direct Connection	RP46/PWM1H/PMD5/RB14
PIM:95	46	Direct Connection	RP56/ASDA1/SCK2/RC8
PIM:96	47	Direct Connection	RP57/ASCL1/SDI2/RC9
PIM:97	—	Not Connected	—
PIM:98	80	Direct Connection	RP45/PWM2L/PMD4/RB13
PIM:99	78	Direct Connection	TDI/RP44/PWM2H/PMD3/RB12
PIM:100	76	Direct Connection	TCK/RP43/PWM3L/PMD2/RB11

Note 1: The PIM pin is directly connected to the device pin through a 0 Ohm resistor (default), which can be removed if desired.

2: The PIM pin can be connected to a device pin through a 0 Ohm resistor, if required. For proper operation, ensure that other 0 Ohm resistors connecting to the same device pin are removed.

3: Digital Power (DVDD) pins are shorted together on the PIM.

4: Digital Ground (DGND) pins are shorted together on the PIM.

5: Analog Ground (AGND) connection via PIM:31 is shorted with Digital Ground (DGND) through 0R resistor, R27, on the PIM.

© 2021 Microchip Technology Inc.

INTERNAL AMPLIFIER

Operational amplifiers internal to the dsPIC33CK512MP608 can be configured and enabled for amplifying motor currents. The amplifier circuits and their detailed schematics (Filter, Feedback and Bias Circuit) are shown in Figure 3.

Op Amp 1, as seen in Figure 3, is not used by default. If the filter, bias and feedback circuit section is populated and Op Amp 1 is configured in firmware, it can be used to amplify the IBUS current. Prior to using Op Amp 1, the resistor jumpers, R23, R24, R25, R26, should be removed to enable IBUS current use of the Op Amp 1 inputs. As a result, this limits the PFC functionality in case of MCHV-2 or Field-Oriented Control on Inverter B of Low-Voltage Motor Control Development Bundle.

FIGURE 3: dsPIC® DSC INTERNAL AMPLIFIERS

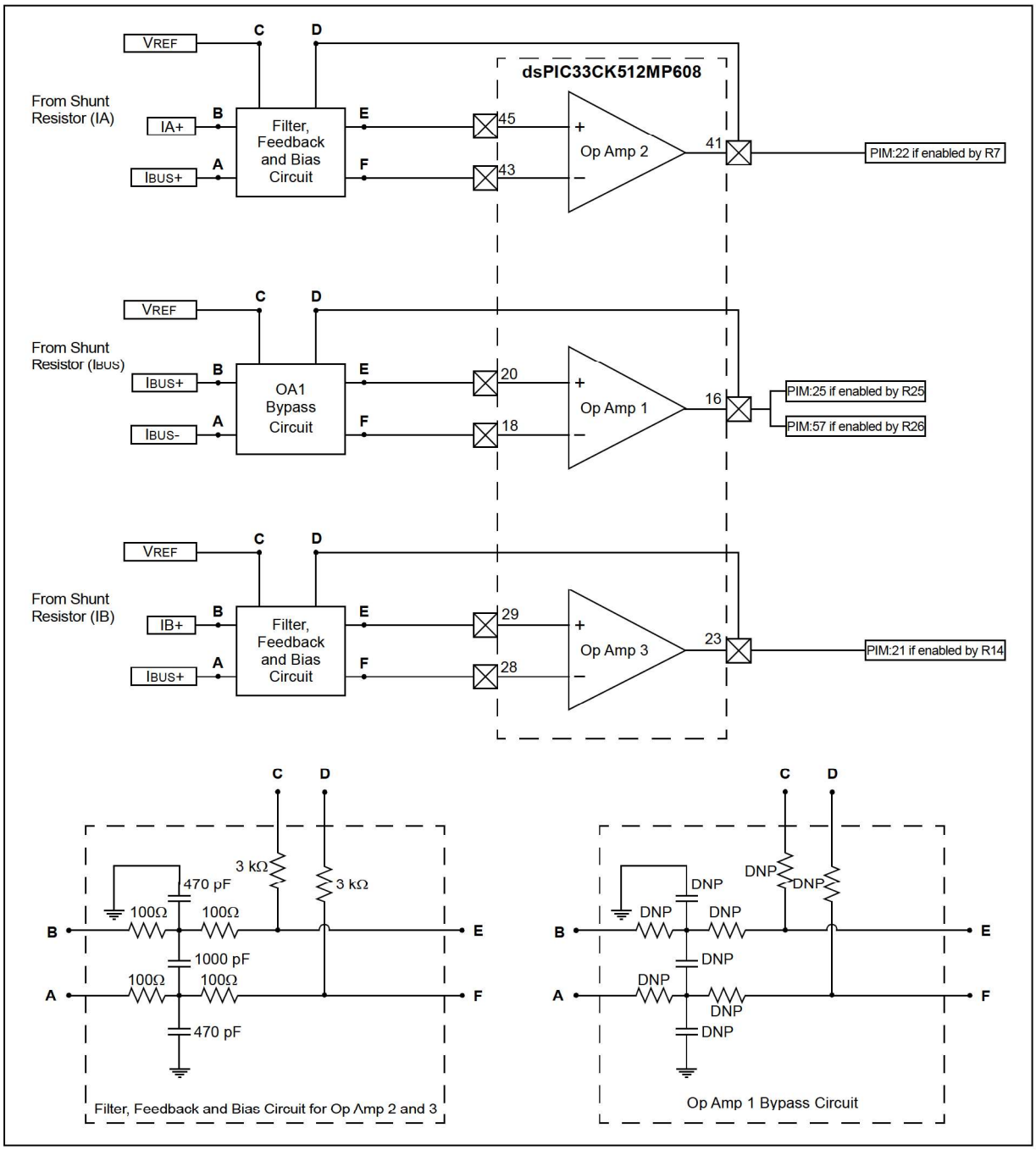

Equation 1 provides the amplifier gain calculation. Equation 2 and Equation 3 provide calculations for cutoff frequencies of the Differential-mode and Common-mode filters.

EQUATION 1: AMPLIFIER GAIN

$$Differential\ Amplifier\ Gain = \frac{3\ k\Omega}{2 \times 100\Omega} = 15$$

EQUATION 2: CUTOFF FREQUENCY DIFFERENTIAL-MODE FILTER

$$Differential\text{-}mode\ f_{-3\ dB} \cong \frac{1}{2\pi(2 \times 100\Omega)\left(\frac{470\ pF}{2} + 1000\ pF\right)} \cong 644\ kHz$$

EQUATION 3: CUTOFF FREQUENCY COMMON-MODE FILTER

$$Common\text{-}mode\ f_{-3dB} \cong \frac{1}{2\pi(100\Omega)(470\ pF)} \cong 3.3\ MHz$$

© 2021 Microchip Technology Inc.

Table 4 classifies the passive components according to their functionality and quotes the design equations applicable in each case.

TABLE 4: ANALOG FUNCTIONALITY LISTING

Op Amp #	Analog Function	Passive Components	Design Equations
1	Low-Pass Filter	R15, R16, R17, R18, C14, C15, C16	$R15 = R16 = R17 = R18 = R$ $C14 = C16 = C$ $R19 = R20$ $Common\text{-}mode\ f_{-3\ dB} \cong \frac{1}{2\pi RC}$ $Differential\text{-}mode\ f_{-3\ dB} \cong \frac{1}{2\pi(2R)\left(\frac{C}{2} + C15\right)}$ $Differential\ Amplifier\ Gain = \frac{R20}{2R}$
	Reference Voltage Bias	R19	
	Differential Amplifier Input	R15, R16, R17, R18	
	Differential Amplifier Feedback	R20	
2	Low-Pass Filter	R1, R2, R3, R4, C8, C9, C10	$R1 = R2 = R3 = R4 = R$ $C8 = C10 = C$ $R5 = R6$ $Common\text{-}mode\ f_{-3\ dB} \cong \frac{1}{2\pi RC}$ $Differential\text{-}mode\ f_{-3\ dB} \cong \frac{1}{2\pi(2R)\left(\frac{C}{2} + C9\right)}$ $Differential\ Amplifier\ Gain = \frac{R6}{2R}$
	Reference Voltage Bias	R5, R6	
	Differential Amplifier Input	R1, R2, R3, R4	
	Differential Amplifier Feedback	R6	
3	Low-Pass Filter	R8, R9, R10, R11, C11, C12, C13	$R8 = R9 = R10 = R11 = R$ $C11 = C13 = C$ $R12 = R13$ $Common\text{-}mode\ f_{-3\ dB} \cong \frac{1}{2\pi RC}$ $Differential\text{-}mode\ f_{-3\ dB} \cong \frac{1}{2\pi(2R)\left(\frac{C}{2} + C12\right)}$ $Differential\ Amplifier\ Gain = \frac{R13}{2R}$
	Reference Voltage Bias	R12, R13	
	Differential Amplifier Input	R8, R9, R10, R11	
	Differential Amplifier Feedback	R13	

dsPIC33CK512MP608 Motor Control Plug-In Module (PIM) for Internal Op Amp Configuration

Schematic Revision 1.0

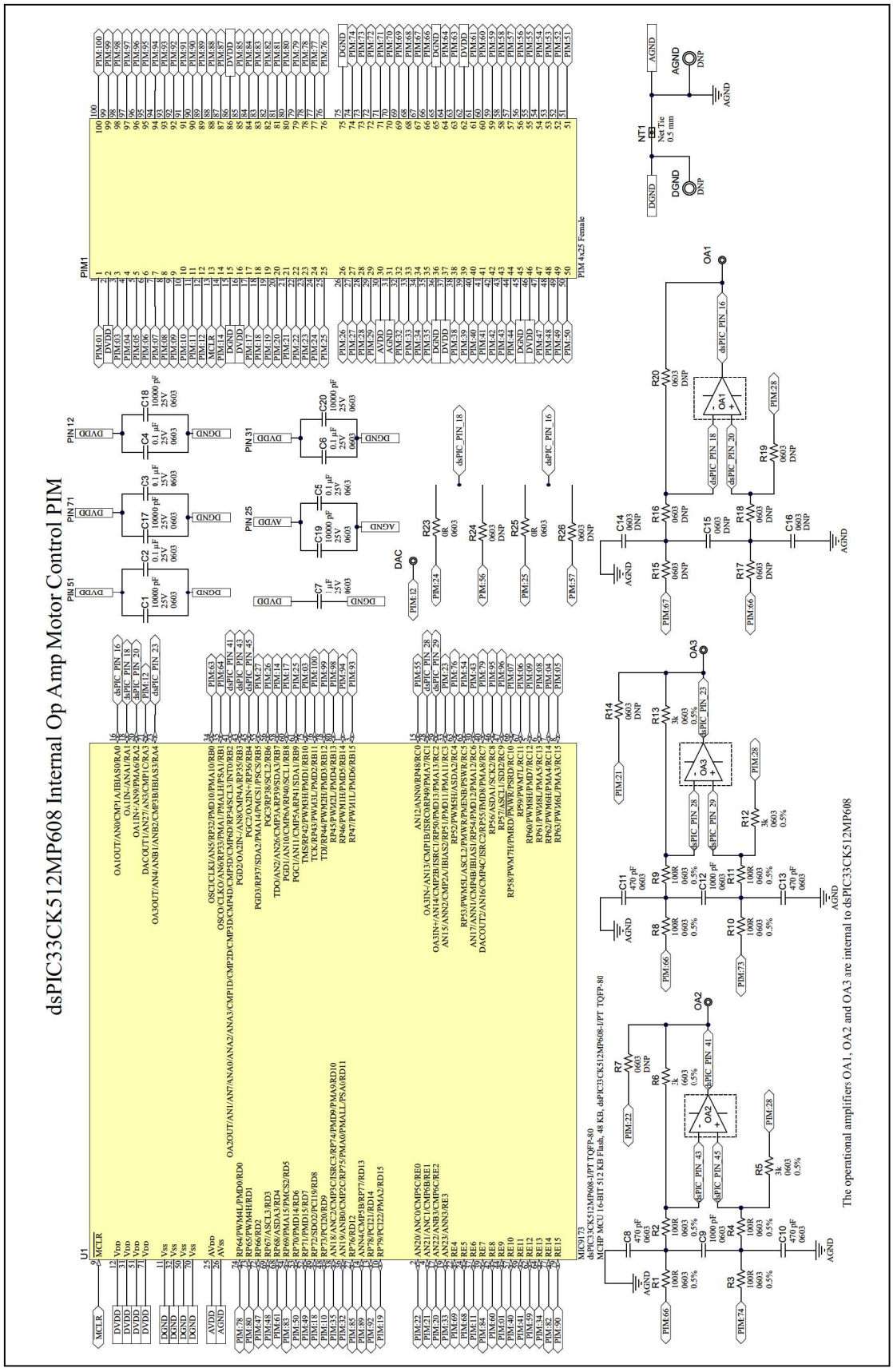

© 2021 Microchip Technology Inc.

Note the following details of the code protection feature on Microchip devices:

- Microchip products meet the specifications contained in their particular Microchip Data Sheet.
- Microchip believes that its family of products is secure when used in the intended manner and under normal conditions.
- There are dishonest and possibly illegal methods being used in attempts to breach the code protection features of the Microchip devices. We believe that these methods require using the Microchip products in a manner outside the operating specifications contained in Microchip's Data Sheets. Attempts to breach these code protection features, most likely, cannot be accomplished without violating Microchip's intellectual property rights.
- Microchip is willing to work with any customer who is concerned about the integrity of its code.
- Neither Microchip nor any other semiconductor manufacturer can guarantee the security of its code. Code protection does not mean that we are guaranteeing the product is "unbreakable." Code protection is constantly evolving. We at Microchip are committed to continuously improving the code protection features of our products. Attempts to break Microchip's code protection feature may be a violation of the Digital Millennium Copyright Act. If such acts allow unauthorized access to your software or other copyrighted work, you may have a right to sue for relief under that Act.

Information contained in this publication is provided for the sole purpose of designing with and using Microchip products. Information regarding device applications and the like is provided only for your convenience and may be superseded by updates. It is your responsibility to ensure that your application meets with your specifications.

THIS INFORMATION IS PROVIDED BY MICROCHIP "AS IS". MICROCHIP MAKES NO REPRESENTATIONS OR WARRANTIES OF ANY KIND WHETHER EXPRESS OR IMPLIED, WRITTEN OR ORAL, STATUTORY OR OTHERWISE, RELATED TO THE INFORMATION INCLUDING BUT NOT LIMITED TO ANY IMPLIED WARRANTIES OF NON-INFRINGEMENT, MERCHANTABILITY, AND FITNESS FOR A PARTICULAR PURPOSE OR WARRANTIES RELATED TO ITS CONDITION, QUALITY, OR PERFORMANCE.

IN NO EVENT WILL MICROCHIP BE LIABLE FOR ANY INDIRECT, SPECIAL, PUNITIVE, INCIDENTAL OR CONSEQUENTIAL LOSS, DAMAGE, COST OR EXPENSE OF ANY KIND WHATSOEVER RELATED TO THE INFORMATION OR ITS USE, HOWEVER CAUSED, EVEN IF MICROCHIP HAS BEEN ADVISED OF THE POSSIBILITY OR THE DAMAGES ARE FORESEEABLE. TO THE FULLEST EXTENT ALLOWED BY LAW, MICROCHIP'S TOTAL LIABILITY ON ALL CLAIMS IN ANY WAY RELATED TO THE INFORMATION OR ITS USE WILL NOT EXCEED THE AMOUNT OF FEES, IF ANY, THAT YOU HAVE PAID DIRECTLY TO MICROCHIP FOR THE INFORMATION. Use of Microchip devices in life support and/or safety applications is entirely at the buyer's risk, and the buyer agrees to defend, indemnify and hold harmless Microchip from any and all damages, claims, suits, or expenses resulting from such use. No licenses are conveyed, implicitly or otherwise, under any Microchip intellectual property rights unless otherwise stated.

For information regarding Microchip's Quality Management Systems, please visit www.microchip.com/quality.

Trademarks

The Microchip name and logo, the Microchip logo, Adaptec, AnyRate, AVR, AVR logo, AVR Freaks, BesTime, BitCloud, chipKIT, chipKIT logo, CryptoMemory, CryptoRF, dsPIC, FlashFlex, flexPWR, HELDO, IGLOO, JukeBlox, KeeLoq, Kleer, LANCheck, LinkMD, maXStylus, maXTouch, MediaLB, megaAVR, Microsemi, Microsemi logo, MOST, MOST logo, MPLAB, OptoLyzer, PackeTime, PIC, picoPower, PICSTART, PIC32 logo, PolarFire, Prochip Designer, QTouch, SAM-BA, SenGenuity, SpyNIC, SST, SST Logo, SuperFlash, Symmetricom, SyncServer, Tachyon, TimeSource, tinyAVR, UNI/O, Vectron, and XMEGA are registered trademarks of Microchip Technology Incorporated in the U.S.A. and other countries.

AgileSwitch, APT, ClockWorks, The Embedded Control Solutions Company, EtherSynch, FlashTec, Hyper Speed Control, HyperLight Load, IntelliMOS, Libero, motorBench, mTouch, Powermite 3, Precision Edge, ProASIC, ProASIC Plus, ProASIC Plus logo, Quiet-Wire, SmartFusion, SyncWorld, Temux, TimeCesium, TimeHub, TimePictra, TimeProvider, WinPath, and ZL are registered trademarks of Microchip Technology Incorporated in the U.S.A.

Adjacent Key Suppression, AKS, Analog-for-the-Digital Age, Any Capacitor, AnyIn, AnyOut, Augmented Switching, BlueSky, BodyCom, CodeGuard, CryptoAuthentication, CryptoAutomotive, CryptoCompanion, CryptoController, dsPICDEM, dsPICDEM.net, Dynamic Average Matching, DAM, ECAN, Espresso T1S, EtherGREEN, IdealBridge, In-Circuit Serial Programming, ICSP, INICnet, Intelligent Paralleling, Inter-Chip Connectivity, JitterBlocker, maxCrypto, maxView, memBrain, Mindi, MiWi, MPASM, MPF, MPLAB Certified logo, MPLIB, MPLINK, MultiTRAK, NetDetach, Omniscient Code Generation, PICDEM, PICDEM.net, PICkit, PICtail, PowerSmart, PureSilicon, QMatrix, REAL ICE, Ripple Blocker, RTAX, RTG4, SAM-ICE, Serial Quad I/O, simpleMAP, SimpliPHY, SmartBuffer, SMART-I.S., storClad, SQI, SuperSwitcher, SuperSwitcher II, Switchtec, SynchroPHY, Total Endurance, TSHARC, USBCheck, VariSense, VectorBlox, VeriPHY, ViewSpan, WiperLock, XpressConnect, and ZENA are trademarks of Microchip Technology Incorporated in the U.S.A. and other countries.

SQTP is a service mark of Microchip Technology Incorporated in the U.S.A.

The Adaptec logo, Frequency on Demand, Silicon Storage Technology, and Symmcom are registered trademarks of Microchip Technology Inc. in other countries.

GestIC is a registered trademark of Microchip Technology Germany II GmbH & Co. KG, a subsidiary of Microchip Technology Inc., in other countries.

All other trademarks mentioned herein are property of their respective companies.

© 2021, Microchip Technology Incorporated, All Rights Reserved.

ISBN: 978-1-5224-8757-9

Worldwide Sales and Service

AMERICAS

Corporate Office
2355 West Chandler Blvd.
Chandler, AZ 85224-6199
Tel: 480-792-7200
Fax: 480-792-7277
Technical Support:
http://www.microchip.com/support
Web Address:
www.microchip.com

Atlanta
Duluth, GA
Tel: 678-957-9614
Fax: 678-957-1455

Austin, TX
Tel: 512-257-3370

Boston
Westborough, MA
Tel: 774-760-0087
Fax: 774-760-0088

Chicago
Itasca, IL
Tel: 630-285-0071
Fax: 630-285-0075

Dallas
Addison, TX
Tel: 972-818-7423
Fax: 972-818-2924

Detroit
Novi, MI
Tel: 248-848-4000

Houston, TX
Tel: 281-894-5983

Indianapolis
Noblesville, IN
Tel: 317-773-8323
Fax: 317-773-5453
Tel: 317-536-2380

Los Angeles
Mission Viejo, CA
Tel: 949-462-9523
Fax: 949-462-9608
Tel: 951-273-7800

Raleigh, NC
Tel: 919-844-7510

New York, NY
Tel: 631-435-6000

San Jose, CA
Tel: 408-735-9110
Tel: 408-436-4270

Canada - Toronto
Tel: 905-695-1980
Fax: 905-695-2078

ASIA/PACIFIC

Australia - Sydney
Tel: 61-2-9868-6733

China - Beijing
Tel: 86-10-8569-7000

China - Chengdu
Tel: 86-28-8665-5511

China - Chongqing
Tel: 86-23-8980-9588

China - Dongguan
Tel: 86-769-8702-9880

China - Guangzhou
Tel: 86-20-8755-8029

China - Hangzhou
Tel: 86-571-8792-8115

China - Hong Kong SAR
Tel: 852-2943-5100

China - Nanjing
Tel: 86-25-8473-2460

China - Qingdao
Tel: 86-532-8502-7355

China - Shanghai
Tel: 86-21-3326-8000

China - Shenyang
Tel: 86-24-2334-2829

China - Shenzhen
Tel: 86-755-8864-2200

China - Suzhou
Tel: 86-186-6233-1526

China - Wuhan
Tel: 86-27-5980-5300

China - Xian
Tel: 86-29-8833-7252

China - Xiamen
Tel: 86-592-2388138

China - Zhuhai
Tel: 86-756-3210040

ASIA/PACIFIC

India - Bangalore
Tel: 91-80-3090-4444

India - New Delhi
Tel: 91-11-4160-8631

India - Pune
Tel: 91-20-4121-0141

Japan - Osaka
Tel: 81-6-6152-7160

Japan - Tokyo
Tel: 81-3-6880- 3770

Korea - Daegu
Tel: 82-53-744-4301

Korea - Seoul
Tel: 82-2-554-7200

Malaysia - Kuala Lumpur
Tel: 60-3-7651-7906

Malaysia - Penang
Tel: 60-4-227-8870

Philippines - Manila
Tel: 63-2-634-9065

Singapore
Tel: 65-6334-8870

Taiwan - Hsin Chu
Tel: 886-3-577-8366

Taiwan - Kaohsiung
Tel: 886-7-213-7830

Taiwan - Taipei
Tel: 886-2-2508-8600

Thailand - Bangkok
Tel: 66-2-694-1351

Vietnam - Ho Chi Minh
Tel: 84-28-5448-2100

EUROPE

Austria - Wels
Tel: 43-7242-2244-39
Fax: 43-7242-2244-393

Denmark - Copenhagen
Tel: 45-4485-5910
Fax: 45-4485-2829

Finland - Espoo
Tel: 358-9-4520-820

France - Paris
Tel: 33-1-69-53-63-20
Fax: 33-1-69-30-90-79

Germany - Garching
Tel: 49-8931-9700

Germany - Haan
Tel: 49-2129-3766400

Germany - Heilbronn
Tel: 49-7131-72400

Germany - Karlsruhe
Tel: 49-721-625370

Germany - Munich
Tel: 49-89-627-144-0
Fax: 49-89-627-144-44

Germany - Rosenheim
Tel: 49-8031-354-560

Israel - Ra'anana
Tel: 972-9-744-7705

Italy - Milan
Tel: 39-0331-742611
Fax: 39-0331-466781

Italy - Padova
Tel: 39-049-7625286

Netherlands - Drunen
Tel: 31-416-690399
Fax: 31-416-690340

Norway - Trondheim
Tel: 47-7288-4388

Poland - Warsaw
Tel: 48-22-3325737

Romania - Bucharest
Tel: 40-21-407-87-50

Spain - Madrid
Tel: 34-91-708-08-90
Fax: 34-91-708-08-91

Sweden - Gothenberg
Tel: 46-31-704-60-40

Sweden - Stockholm
Tel: 46-8-5090-4654

UK - Wokingham
Tel: 44-118-921-5800
Fax: 44-118-921-5820

© 2021 Microchip Technology Inc.