Product Description: ICE™ 5W MR16 Non-Dimmable Lamp

ICE™ MR16 LED lamp delivers up to 520 Lumens which is comparable to a 50W MR16 Halogen lamp. Effective heat management technology along with a multi faceted reflector lens that mimics halogen MR16.

SKU Code	Colour	Lumens	Lumens/Watt	Wattage	Beam Angle	Lamp Base
EN-MR165/27	2700	480	96	5	60	GU5.3
EN-MR165/30	3000	500	100	5	60	GU5.3
EN-MR165/40	4000	520	104	5	60	GU5.3

Line Drawing

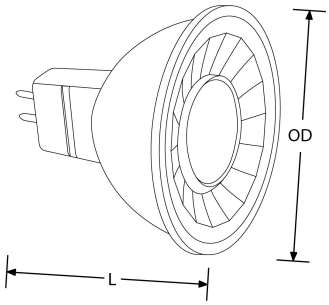

Polar Curve

Colour

Product Features:

- Excellent efficacy delivering up to 104lm/W
- ThermoTec™ technology utilises a combination of highly efficient LED light source, aluminium heat sinking and thermoplastic material for longer life and consistent performance
- EnFiniti™ lens creates low glare, halogen like appearance
- Wide 60° beam angle delivers increased light distribution
- 3 year warranty

Product Specs:

Input Voltage	12~12V DC
Operating Temp. (Max) °C	85°C
Lamp Base	GU5.3
Overall Height (mm)	51
Weight (Kg)	0.032
Operating Temp. (Min) °C	-40

Power Factor	0.5
Overall Diameter (mm)	50
Length (mm)	42
Lamp Type	MR16
Lifetime Hours	25000hrs

Compliance & Approvals:

Warranty:

This product has a warranty period of 3 Years. Warranties may be available on certain products as indicated in the product description. Warranties are valid from the date of purchase.The warranty is invalid in the case of improper use, installation, tampering, removal of the Q.C. date label or installation in an improper working environment or installation. Should this product fail during the warranty period it will be replaced free of charge, subject to the correct installation of the original product and subsequent return of the faulty unit. Aurora does not accept responsibility for any installation costs associated with the replacement of this product and Aurora reserves the right to alter specifications without prior notice.