RC-010	
Dimensions (mm)	35 x 50 x 13 mm
Material	ABS
Colours	Black

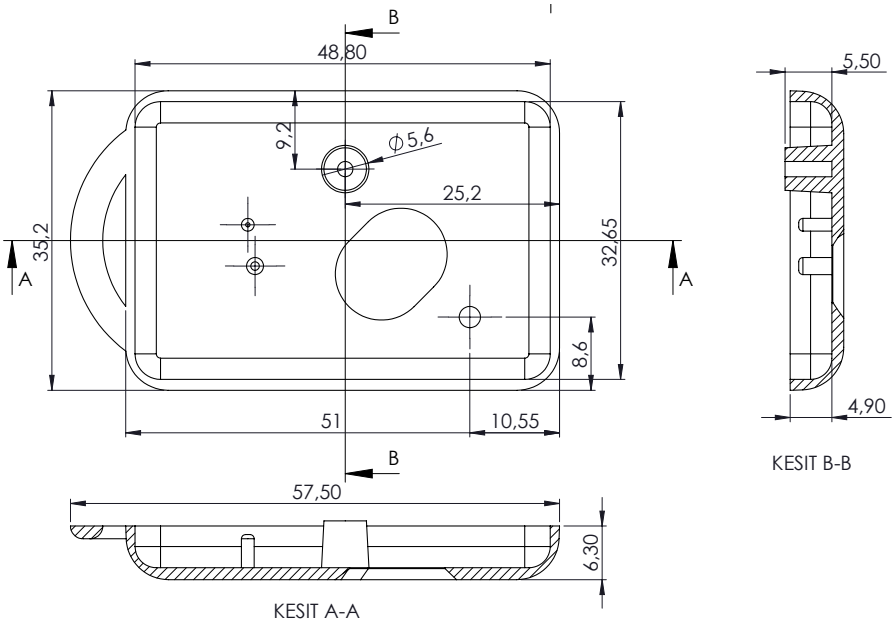

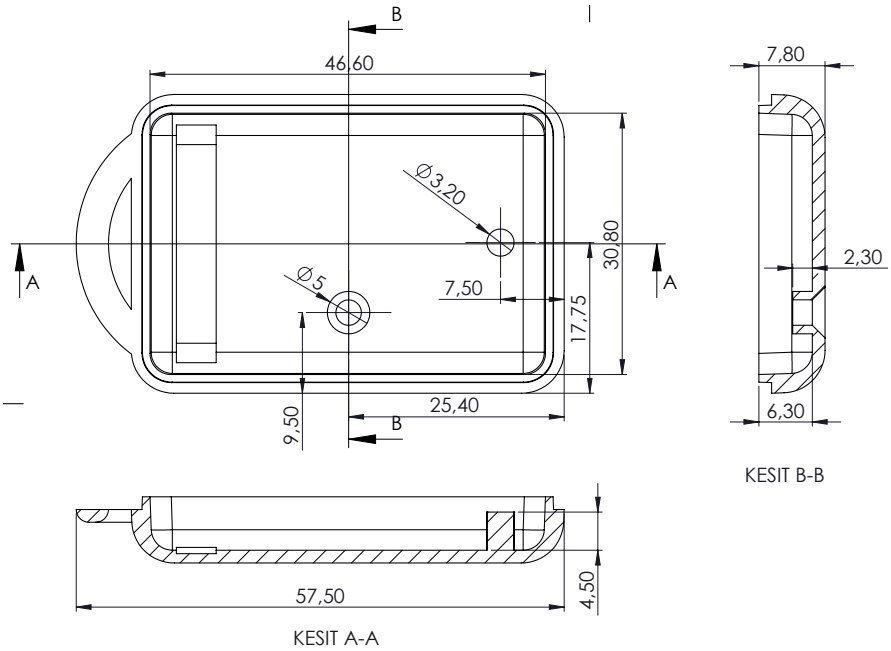

Hitaltech UK
(Sales UK & Ireland)
T: +44 1253 899910
E: uksales@hitaltech.co.uk