ASSEMBLY INSTRUCTION

RRAC3F-X-000 | Power Receptacle

Ⓐ

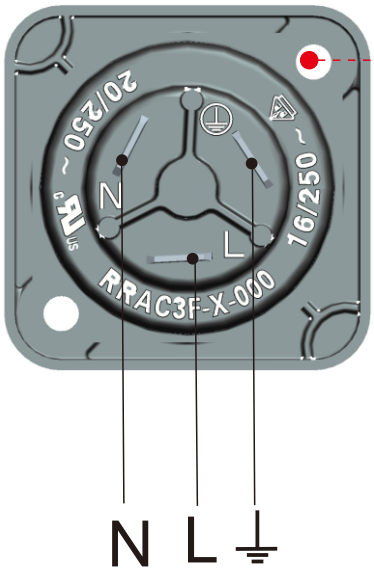

Ⓐ Assembly instruction

Attention:
Screw tightening torque
M_A=40 Ncm

Ⓑ

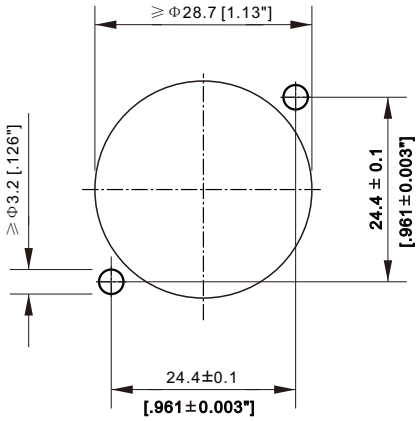

Ⓑ Panel Cutout (Rear Side)

Power Receptacle:
Find more details on
www.rean-connectors.com

Neutrik AG	**LI**	T: +423 / 237 24 24	F: +423/232 53 93	**Neutrik France**	**FR**	T: +33 1/4131 6750	F: +33 1/4131 0511
Neutrik USA Inc.	**USA**	T: +1 704 / 972 3050	F: +1 704/438 9202	**Neutrik Tokyo Ltd.**	**JP**	T: +81 3/3663 4733	F: +81 3/3663 4796
Neutrik (UK) Ltd.	**UK**	T: +44 1983 / 811 441	F: +44 1983/811 439	**Neutrik Hong Kong Ltd.**	**HK**	T: +852/2687 6055	F: +852/2687 6052
Neutrik Vertriebs GmbH	**DE / NL / AT/DK**	T: +49 8131 / 280 890	F: +49 8131/280 830				

Draft. Nr.: NCN 029 | Update: 2022-04-26

Data subject to change without prior notice. © 2021 REAN®. REAN® is registered trademark of Neutrik AG. ALL RIGHTS RESERVED.