# CHT12C103J3GAFT050

C0G HT 260C, Ceramic, 0.01 uF, 5%, 25 VDC, C0G, SMD, MLCC, High Temperature, 260C, 1206

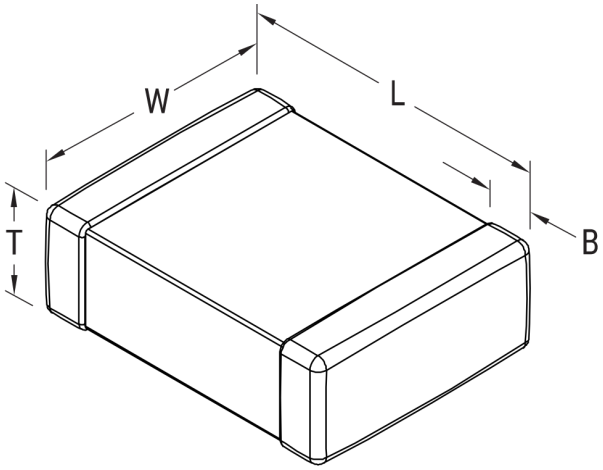


Click here for the 3D model.

| Dimensions | |
|---|---|
| Chip Size | 1206 |
| L | 3.2mm +/-0.2mm |
| W | 1.6mm +/-0.2mm |
| T | 1mm +/-0.10mm |
| B | 0.5mm +/-0.25mm |

| Packaging Specifications | |
|---|---|
| Packaging | Cut Reel |
| Packaging Quantity | 50 |

| General Information | |
|---|---|
| Series | C0G HT 260C |
| Style | SMD Chip |
| Description | SMD, MLCC, High Temperature, 260C |
| Features | High Temperature, Low ESR |
| RoHS | Yes |
| Termination | Gold |
| Marking | No |
| AEC-Q200 | No |
| Component Weight | 25 mg |
| Miscellaneous | Gold (Au) 30 - 70 micro inches. |
| Shelf Life | 78 Weeks |
| MSL | 1 |

| Specifications | |
|---|---|
| Capacitance | 0.01 uF |
| Measurement Condition | 1 kHz 1.0Vrms |
| Capacitance Tolerance | 5% |
| Voltage DC | 25 VDC |
| Dielectric Withstanding Voltage | 62.5 VDC |
| Temperature Range | -55/+260°C |
| Temperature Coefficient | C0G |
| Capacitance Change with Reference to +25°C and 0 VDC Applied (TCC) | 30PPM/C, 1kHz 1.0Vrms |
| Dissipation Factor | 0.1% 1 kHz 1.0Vrms |
| Aging Rate | 0% Loss/Decade Hour |
| Insulation Resistance | 100 GOhms |

Statements of suitability for certain applications are based on our knowledge of typical operating conditions for such applications, but are not intended to constitute - and we specifically disclaim - any warranty concerning suitability for a specific customer application or use. This Information is intended for use only by customers who have the requisite experience and capability to determine the correct products for their application. Any technical advice inferred from this Information or otherwise provided by us with reference to the use of our products is given gratis, and we assume no obligation or liability for the advice given or results obtained.



© 2006 - 2022 KEMET