CHT13C153J3GAFT050

C0G HT 260C, Ceramic, 0.015 uF, 5%, 25 VDC, C0G, SMD, MLCC, High Temperature, 260C, 1210

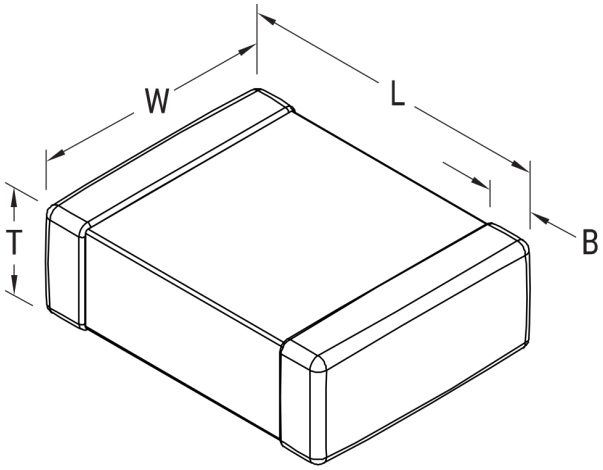

Click here for the 3D model.

Dimensions	
Chip Size	1210
L	3.2mm +/-0.2mm
W	2.5mm +/-0.2mm
T	1.25mm +/-0.15mm
B	0.5mm +/-0.25mm

Packaging Specifications	
Packaging	Cut Reel
Packaging Quantity	50

General Information	
Series	C0G HT 260C
Style	SMD Chip
Description	SMD, MLCC, High Temperature, 260C
Features	High Temperature, Low ESR
RoHS	Yes
Termination	Gold
Marking	No
AEC-Q200	No
Component Weight	40 mg
Miscellaneous	Gold (Au) 30 - 70 micro inches.
Shelf Life	78 Weeks
MSL	1

Specifications	
Capacitance	0.015 uF
Measurement Condition	1 kHz 1.0Vrms
Capacitance Tolerance	5%
Voltage DC	25 VDC
Dielectric Withstanding Voltage	62.5 VDC
Temperature Range	-55/+260°C
Temperature Coefficient	C0G
Capacitance Change with Reference to +25°C and 0 VDC Applied (TCC)	30PPM/C, 1kHz 1.0Vrms
Dissipation Factor	0.1% 1 kHz 1.0Vrms
Aging Rate	0% Loss/Decade Hour
Insulation Resistance	66.6667 GOhms

Statements of suitability for certain applications are based on our knowledge of typical operating conditions for such applications, but are not intended to constitute - and we specifically disclaim - any warranty concerning suitability for a specific customer application or use. This Information is intended for use only by customers who have the requisite experience and capability to determine the correct products for their application. Any technical advice inferred from this Information or otherwise provided by us with reference to the use of our products is given gratis, and we assume no obligation or liability for the advice given or results obtained.

© 2006 - 2022 KEMET