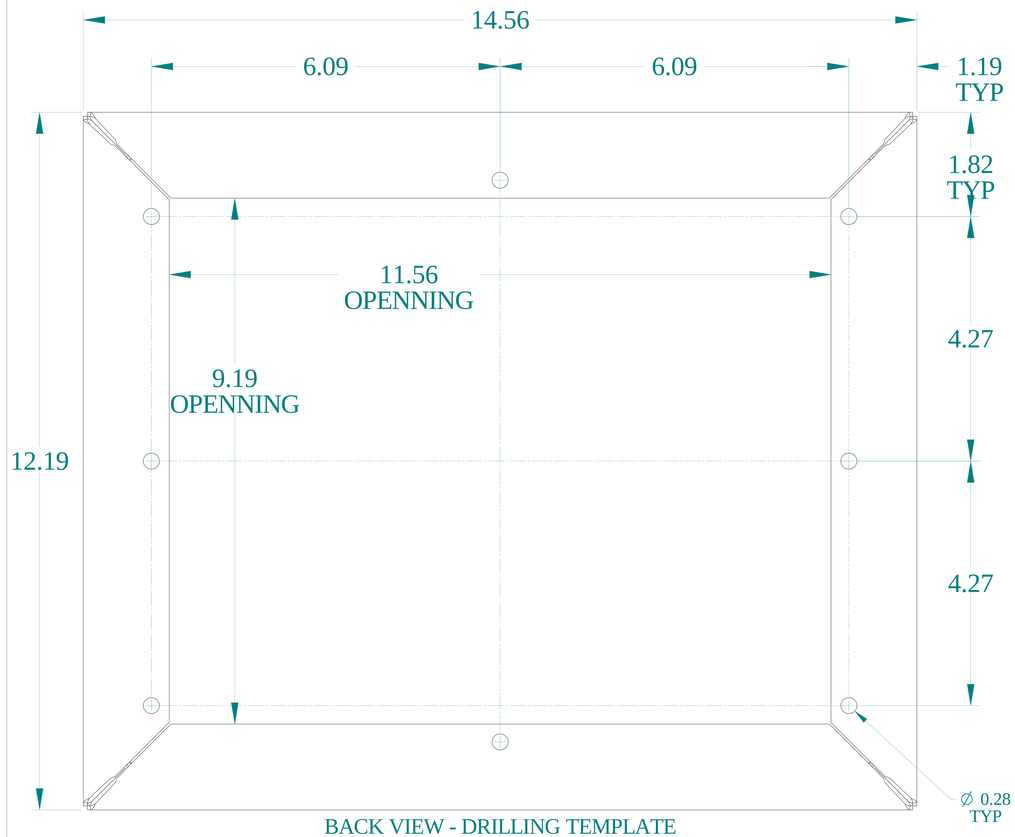


BACK VIEW - DRILLING TEMPLATE
SCALE 2:1

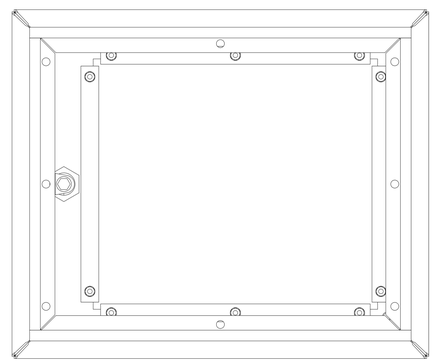

BACK VIEW

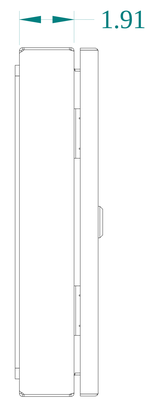


SIDE VIEW

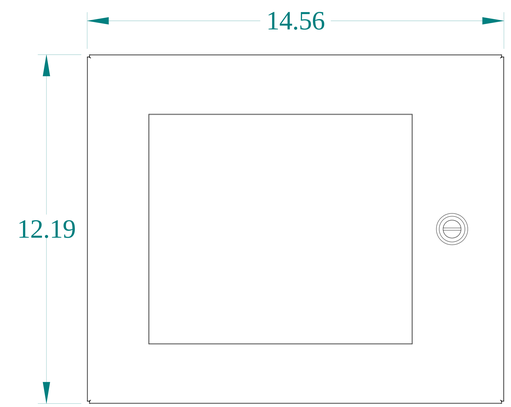


FRONT VIEW

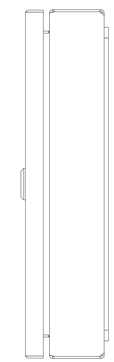

SIDE VIEW

TOP VIEW

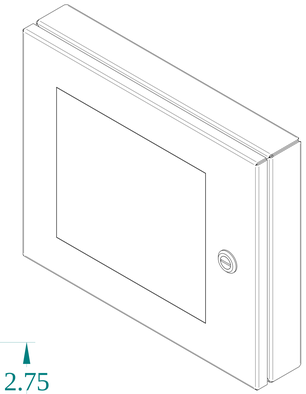

ISOMETRIC VIEW

BOTTOM VIEW

HAMMOND MANUFACTURING®

www.hammondmfg.com

Data subject to change without notice.

| | |
|---|---|
| Part # : 1481WSSDH1418 | Date : Jun. 14, 2022 |

Link:www.hammfg.com/1481WSSDH1418