PXPTPU78FIM04ASTM22 Datasheet

Product Name // 4 Contacts 7/8" Flex Body Male Connector

View Product Page

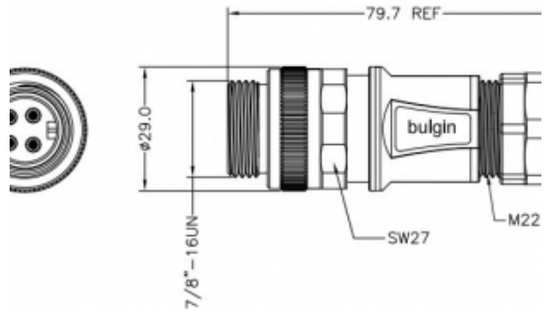

// Product Description:

- 4 Contacts 7-8" Flex Body Male Connector
- IP67 rated when mated
- Mechanical Cycles >100
- Operating Temperature -25Â°C to +85Â°C
- Rated Voltage 300 V
- ROHS compliance

// General Information:

Product Display Title:	7/8" Right Angled Male Connector
Product Family:	Circular Automation Connectors
Product Series:	7/8" Series
Connection Method:	Screw
Contact Pin Material:	Brass gold plated 1u"
Min Coupling Torque:	0.4Nm
Max Coupling Torque:	0.8Nm
Contact Type:	Plug Contact
Current Max:	9A
Durability:	>100 Cycles
Function:	Flex Body Male Connector
Insulation Resistance:	>100MOhm
Ip Rating:	IP67
Max Cable Entry Size:	12mm
Min Cable Entry Size:	6mm
Max Operating Temperature:	+85°C
Min Operating Temperature:	-25°C
Nominal Cross Sectional Area Mm2:	1.5mm2
Number Of Contacts:	4 Contacts
Pin Layout Code:	A Code
Rohs Compliant:	Yes
Thread Size:	M22
Voltage Max:	300V

// Product PDF Links

78 Series Circular connectors...