Data Sheet | Item Number: 750-469

2-channel analog input; Thermocouple K; Diagnostics

https://www.wago.com/750-469

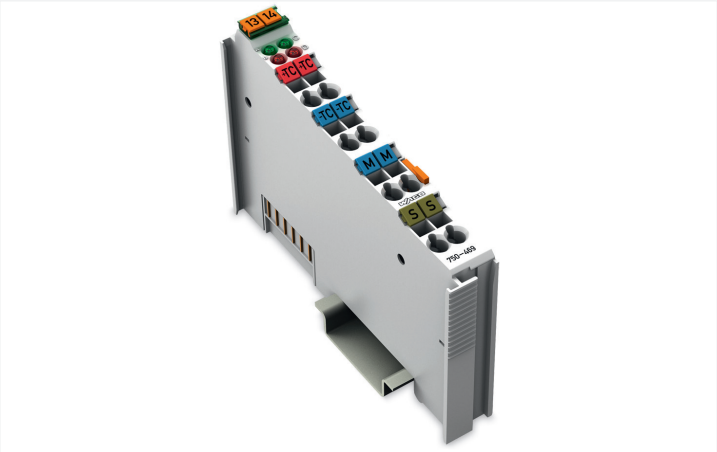

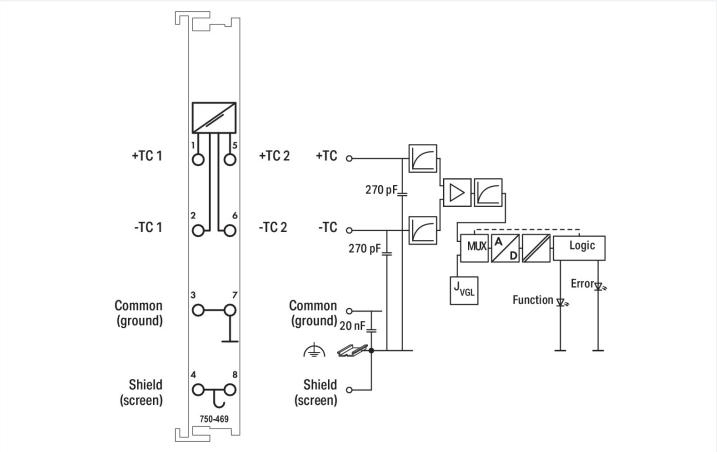

Color: light gray

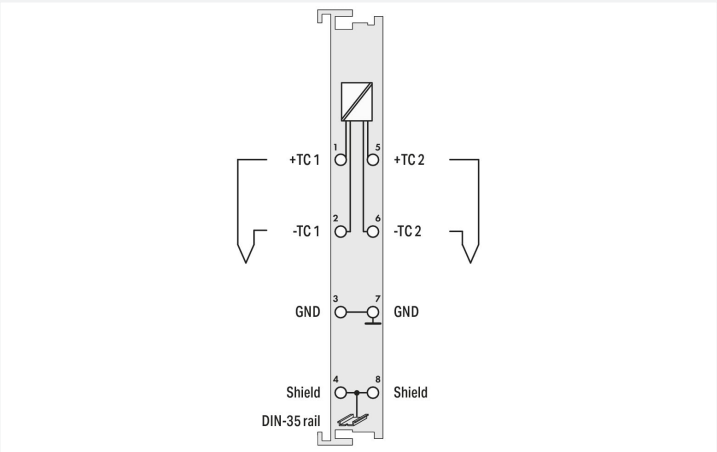

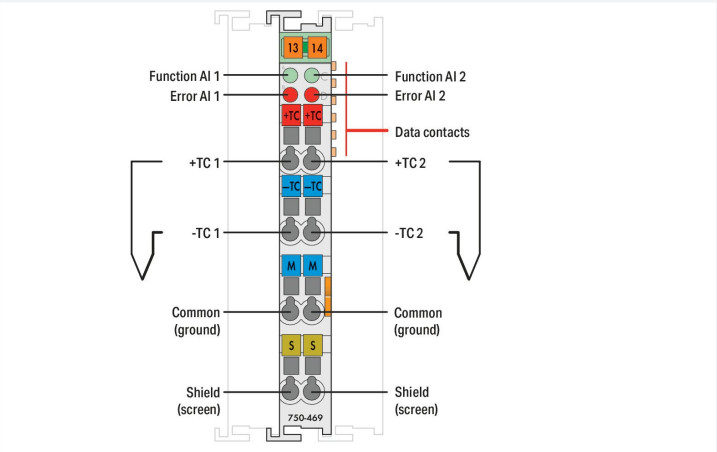

This analog input module directly connects to two thermocouples. Internal electrical isolation allows operation of grounded sensors.
The module automatically linearizes the entire temperature range.
Cold junction compensation mitigates the clamping unit offset voltage over the 0–55°C operating range.
A line break is indicated by a red LED. A green LED indicates readiness for operation and error-free communication with the coupler.
The shield directly connects to the DIN-rail.

Technical data	
Number of analog inputs	2
Total number of channels (module)	2
Signal type	Thermocouple
Sensor connection	2 x (2-wire)
Data width	2 x 16-bit data; 2 x 8-bit control/status (optional)
Internal resistance	1000 kΩ
Resolution (over entire range)	0.1 °C
Conversion time (typ.)	320 ms
Measurement error (25 °C)	< ±6 K (voltage input < ±2 K; cold junction compensation < ±4 K)
Temperature coefficient	< ±0.2 K/K
Sensor types	Thermocouple K
Temperature range	−100 … +1370 °C
Cold junction compensation	at each pair of terminal blocks
Supply voltage (system)	5 VDC; via data contacts
Current consumption (5 V system supply)	65 mA
Isolation	500 V system/field
Indicators	LED (A, C) green: Function AI 1, AI 2; LED (B, D) red: Error AI 1, AI 2

 Continued on next page

Connection data

Connection technology: inputs/outputs	8 x CAGE CLAMP®
Connection type 1	Inputs/outputs
Solid conductor	0.08 … 2.5 mm² / 28 … 14 AWG
Fine-stranded conductor	0.08 … 2.5 mm² / 28 … 14 AWG
Strip length	8 … 9 mm / 0.31 … 0.35 inches

Physical data

Width	12 mm / 0.472 inches
Height	100 mm / 3.937 inches
Depth	69.8 mm / 2.748 inches
Depth from upper-edge of DIN-rail	62.6 mm / 2.465 inches

Mechanical data

Mounting type	DIN-35 rail

Material data

Color	light gray
Housing material	Polycarbonate; polyamide 6.6
Fire load	1.034 MJ
Weight	52 g
Conformity marking	CE

Environmental requirements

Ambient temperature (operation)	0 … +55 °C
Ambient temperature (storage)	-40 … +85 °C
Protection type	IP20
Pollution degree	2 per IEC 61131-2
Operating altitude	0 … 2000 m / 0 … 6562 ft
Mounting position	horizontal (standing/lying); vertical
Relative humidity (without condensation)	95 %
Vibration resistance	4g per IEC 60068-2-6
Shock resistance	15g per IEC 60068-2-27
EMC immunity to interference	per EN 61000-6-2, marine applications
EMC emission of interference	per EN 61000-6-4, marine applications
Exposure to pollutants	per IEC 60068-2-42 and IEC 60068-2-43
Permissible H_2S contaminant concentration at a relative humidity 75 %	10 ppm
Permissible SO_2 contaminant concentration at a relative humidity 75 %	25 ppm

Commercial data

Product Group	15 (I/O System)
eCl@ss 10.0	27-24-26-01
eCl@ss 9.0	27-24-26-01
ETIM 8.0	EC001596
ETIM 7.0	EC001596
PU (SPU)	1 pcs
Packaging type	Box
Country of origin	DE
GTIN	4045454393083
Customs tariff number	85389099990

 Continued on next page

Environmental Product Compliance

CAS-No.	1303-86-2 1317-36-8 7439-92-1
REACH Candidate List Substance	Diboron trioxide Lead Lead monoxide
RoHS Compliance Status	Compliant,With Exemption
RoHS Exemption	6(c) 7(a) 7(c)-I 7(c)-II
SCIP notification number (Austria)	8de57f17-6cea-41c8-9428-dc8c69b36a3e
SCIP notification number (Belgium)	fad3c483-4252-439f-87a6-5be0ca6fc3ca
SCIP notification number (Bulgaria)	ca61cf7b-c621-44e4-9df8-125a8671cd5a
SCIP notification number (Czech Republic)	b81380bb-4500-4d05-9c04-ad77be0cc4d6
SCIP notification number (Denmark)	a705d607-9dac-4e28-af9a-6a5d2b8a1da9
SCIP notification number (Finland)	3302c55e-e82f-4ebe-a8f4-8743500f42ba
SCIP notification number (France)	cc3e1fae-5840-4079-9c50-da64d7c8a8e2
SCIP notification number (Germany)	e5c5d4db-35da-42fd-96d2-4f0655999d82
SCIP notification number (Hungary)	e4007bf4-9f71-4d0b-a44b-b926b144db5b
SCIP notification number (Italy)	af1cdaa9-40af-4bd7-b388-315c866af54d
SCIP notification number (Netherlands)	0d0b83d5-edf6-40a0-ad6c-8de098d39d4a
SCIP notification number (Poland)	f13b6ffa-2258-4009-988f-4bf116c6bc2f
SCIP notification number (Romania)	4261d15a-45be-4df0-b894-edc007578c77
SCIP notification number (Sweden)	da562e67-424b-42a1-97c8-3951d8b02112

Approvals / Certificates

General approvals

Approval	Standard	Certificate Name
EAC Brjansker Zertifizierungs-stelle	TP TC 020/2011	EAC RU C-DE.AM02.B.00087/19
KC National Radio Research Agency	Article 58-2, Clause 3	MSIP-REM-W43-AIM750
UL UL International Nether-lands B.V. (ORDINARY LO-CATIONS)	UL 508	E175199 Sec.1

Declarations of conformity and manufacturer's declarations

Approval	Standard	Certificate Name
EU-Declaration of Confor-mity WAGO GmbH & Co. KG	-	-
UK-Declaration of Confor-mity WAGO GmbH & Co. KG	-	-

Approvals for marine applications

Approval	Standard	Certificate Name
ABS American Bureau of Ship-ping	-	22-2219060
BSH Bundesamt fuer See-schifffahrt und Hydrogra-phie	-	1104
BV Bureau Veritas S.A.	-	13453/E0 BV

Approvals for marine applications

DNV DNV GL SE	DNV-CG-0339,Aug.2021	TAA0000194
KR Korean Register of Ship-ping	-	KR HMB05880-AC001
LR Lloyds Register EMEA	-	LR22180952TA
RINA RINA Germany GmbH	-	ELE343521XG001

 Continued on next page

Approvals for hazardous areas

Approval	Standard	Certificate Name
ATEX TUEV Nord Cert GmbH	EN 60079-0	TUEV14ATEX148929X (II 3 G Ex ec IIC T4 Gc)
CCCEx CQST/CNEx	CNCA-C23-01	2020312310000213 (Ex ec IIC T4 Gc)
EAC Brjansker Zertifizierungs-stelle	TP TC 012/2011	EAC RU C-DE.AM02. B.00163/19 (2Ex nA IIC T4 Gc X)
IECEx TUEV Nord Cert GmbH	IEC 60079-0	IECEx TUN 14.0035 X (Ex ec IIC T4 Gc)
INMETRO TÜV Rheinland do Brasil Ltda.	IEC 60079-0	TÜV 12.1297 X
UKEx WAGO GmbH & Co. KG	EN 60079-0	UKCA_WA GO22UKEX003X_ec
UL Underwriters Laboratories Inc. (HAZARDOUS LOCA-TIONS)	UL 121201	E198726 Sec.1

Downloads

Environmental Product Compliance

Compliance Search

Environmental Product Compliance 750-469

Documentation

Manual

Product Manual 2-channel, thermocoup-les, line break detection	V 1.1.0	pdf 2669.80 KB	
System Manual WAGO I/O System 750/753	V 3.3.3 29.08.2023	pdf 8512.61 KB	
System Manual Series 750/753			

System Description

750/753 Series I/O-System – General Pro-duct Information	pdf 953.35 KB	
Overview on WAGO-I/O-SYSTEM 750 appro-vals	pdf 770.48 KB	

Bid Text

750-469	19.02.2019	xml 4.65 KB	
750-469	20.10.2017	doc 28.00 KB	

Instruction Leaflet

CCC Ex (Additional in-formation)	26.04.2023	pdf 159.76 KB	

 Continued on next page

Application Notes

Application note, other			
Configuring WAGO Ethernet with National Instruments LabVIEW via Modbus/TCP (a201602)	1.1.1 09.03.2005	zip 1599.13 KB	

CAD/CAE-Data

CAD data
2D/3D Models 750-469

CAE data
EPLAN Data Portal 750-469
WSCAD Universe 750-469
ZUKEN Portal 750-469

Device Files

Device Driver			
WAGO USB Service Kabel Treiber / Serie 750 und 857	6.5.3.0 10.09.2014	zip 4721.96 KB	

1 Compatible Products

1.1 Optional Accessories

1.1.1 DIN-rail

1.1.1.1 Mounting accessories

Item No.: 210-196
Aluminum carrier rail; 35 x 8.2 mm; 1.6 mm thick; 2 m long; unslotted; similar to EN 60715; silver-colored

Item No.: 210-198
Copper carrier rail; 35 x 15 mm; 2.3 mm thick; 2 m long; unslotted; according to EN 60715; copper-colored

Item No.: 210-508
Steel carrier rail; 35 x 15 mm; 1.5 mm thick; 2 m long; slotted; galvanized; similar to EN 60715; silver-colored

Item No.: 210-197
Steel carrier rail; 35 x 15 mm; 1.5 mm thick; 2 m long; slotted; similar to EN 60715; silver-colored

Item No.: 210-506
Steel carrier rail; 35 x 15 mm; 1.5 mm thick; 2 m long; unslotted; galvanized; similar to EN 60715; silver-colored

Item No.: 210-114
Steel carrier rail; 35 x 15 mm; 1.5 mm thick; 2 m long; unslotted; similar to EN 60715; silver-colored

Item No.: 210-118
Steel carrier rail; 35 x 15 mm; 2.3 mm thick; 2 m long; unslotted; according to EN 60715; silver-colored

Item No.: 210-115
Steel carrier rail; 35 x 7.5 mm; 1 mm thick; 2 m long; slotted; according to EN 60715; "Hole width 18 mm; silver-colored

Item No.: 210-112
Steel carrier rail; 35 x 7.5 mm; 1 mm thick; 2 m long; slotted; according to EN 60715; "Hole width 25 mm; silver-colored

Item No.: 210-504
Steel carrier rail; 35 x 7.5 mm; 1 mm thick; 2 m long; slotted; galvanized; according to EN 60715; silver-colored

Item No.: 210-113
Steel carrier rail; 35 x 7.5 mm; 1 mm thick; 2 m long; unslotted; according to EN 60715; silver-colored

Item No.: 210-505
Steel carrier rail; 35 x 7.5 mm; 1 mm thick; 2 m long; unslotted; galvanized; according to EN 60715; silver-colored

 Continued on next page

1.1.2 Marking

1.1.2.1 Group marker carrier

Item No.: 750-106
Group marker carrier

1.1.2.2 Marker

Item No.: 750-100
Marker card; as a DIN A4 sheet; plain

Item No.: 2009-145/000-006
Mini-WSB Inline; for Smart Printer; 1700 pieces on roll; stretchable 5 - 5.2 mm; plain; snap-on type; blue

Item No.: 2009-145/000-007
Mini-WSB Inline; for Smart Printer; 1700 pieces on roll; stretchable 5 - 5.2 mm; plain; snap-on type; gray

Item No.: 2009-145/000-023
Mini-WSB Inline; for Smart Printer; 1700 pieces on roll; stretchable 5 - 5.2 mm; plain; snap-on type; green

Item No.: 2009-145/000-012
Mini-WSB Inline; for Smart Printer; 1700 pieces on roll; stretchable 5 - 5.2 mm; plain; snap-on type; orange

Item No.: 2009-145/000-005
Mini-WSB Inline; for Smart Printer; 1700 pieces on roll; stretchable 5 - 5.2 mm; plain; snap-on type; red

Item No.: 2009-145/000-024
Mini-WSB Inline; for Smart Printer; 1700 pieces on roll; stretchable 5 - 5.2 mm; plain; snap-on type; violet

Item No.: 2009-145
Mini-WSB Inline; for Smart Printer; 1700 pieces on roll; stretchable 5 - 5.2 mm; plain; snap-on type; white

Item No.: 2009-145/000-002
Mini-WSB Inline; for Smart Printer; 1700 pieces on roll; stretchable 5 - 5.2 mm; plain; snap-on type; yellow

Item No.: 248-501/000-006
Mini-WSB marking card; as card; not stretchable; plain; snap-on type; blue

Item No.: 248-501/000-007
Mini-WSB marking card; as card; not stretchable; plain; snap-on type; gray

Item No.: 248-501/000-023
Mini-WSB marking card; as card; not stretchable; plain; snap-on type; green

Item No.: 248-501/000-017
Mini-WSB marking card; as card; not stretchable; plain; snap-on type; light green

Item No.: 248-501/000-012
Mini-WSB marking card; as card; not stretchable; plain; snap-on type; orange

Item No.: 248-501/000-005
Mini-WSB marking card; as card; not stretchable; plain; snap-on type; red

Item No.: 248-501/000-024
Mini-WSB marking card; as card; not stretchable; plain; snap-on type; violet

Item No.: 248-501
Mini-WSB marking card; as card; not stretchable; plain; snap-on type; white

Item No.: 248-501/000-002
Mini-WSB marking card; as card; not stretchable; plain; snap-on type; yellow

1.1.2.3 Marker carrier

Item No.: 750-103
Group marker carrier

1.1.3 Shield termination

1.1.3.1 Shield clamping saddles

Item No.: 790-108
Shield clamping saddle; 11 mm wide; diameter of compatible conductor; 3 ... 8 mm

Item No.: 790-208
Shield clamping saddle; 12.4 mm wide; 3 ... 8 mm

Item No.: 790-116
Shield clamping saddle; 19 mm wide; diameter of compatible conductor; 7 ... 16 mm

Item No.: 790-216
Shield clamping saddle; 21.8 mm wide; 6 ... 16 mm

Item No.: 790-124
Shield clamping saddle; 27 mm wide; diameter of compatible conductor; 6 ... 24 mm

Item No.: 790-220
Shield clamping saddle; 30 mm wide; 6 ... 20 mm

Item No.: 790-140
Shield clamping saddle; diameter of compatible conductor

 Continued on next page

1.1.4 System enclosure

1.1.4.1 System enclosure

Item No.: 850-825
IP65 enclosure; Aluminium (RAL 7032); WxHxD (160x100x160 mm); 9 x M12, 4 x M20

Item No.: 850-826
IP65 enclosure; Aluminium (RAL 7032); WxHxD (240x100x160 mm); 4 x M20, 4 x M16, 14 x M12 cable grip

Item No.: 850-827
IP65 enclosure; Aluminium (RAL 7032); WxHxD (320x100x160 mm); 4 x M20, 8 x M16, 17 x M12 cable grip

Item No.: 850-828
IP65 enclosure; Aluminium (RAL 7032); WxHxD (480x100x160 mm); 4 x M20, 10 x M16, 35 x M12 cable grip

Item No.: 850-826/002-000
IP65 enclosure; Aluminium (RAL 7035); WxHxD (240x100x160 mm); 4 x M20, 4 x M16, 14 x M12 cable grip

Item No.: 850-827/002-000
IP65 enclosure; Aluminium (RAL 7035); WxHxD (320x100x160 mm); 4 x M20, 8 x M16, 17 x M12 cable grip

Item No.: 850-828/002-000
IP65 enclosure; Aluminium (RAL 7035); WxHxD (480x100x160 mm); 4 x M20, 10 x M16, 35 x M12 cable grip

Item No.: 850-834
IP65 enclosure; Polyester (RAL 7032); WxHxD (164x100x164 mm); 9 x M12, 4 x M20

Item No.: 850-835
IP65 enclosure; Polyester (RAL 7032); WxHxD (244x100x164 mm); 4 x M20, 4 x M16, 14 x M12 cable grip

Item No.: 850-836
IP65 enclosure; Polyester (RAL 7032); WxHxD (324x100x164 mm); 4 x M20, 8 x M16, 17 x M12 cable grip

Item No.: 850-814/002-000
IP65 enclosure; Sheet steel (RAL 7035); WxHxD (200x120x200 mm); without flange plate

Item No.: 850-815/002-000
IP65 enclosure; Sheet steel (RAL 7035); WxHxD (300x120x200 mm); without flange plate

Item No.: 850-816/002-000
IP65 enclosure; Sheet steel (RAL 7035); WxHxD (400x120x200 mm); without flange plate

Item No.: 850-817/002-000
IP65 enclosure; Sheet steel (RAL 7035); WxHxD (600x120x200 mm); without flange plate