Product data sheet

Specifications

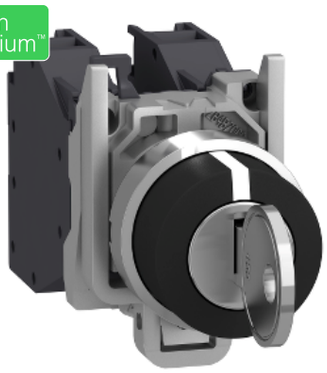

Harmony XB4, Key switch selector, metal, black, Ø22, key 455, 3 positions, stay put, 2 NO

XB4BG33

Product availability : Stock - Normally stocked in distribution facility

Main

Range of Product	Harmony XB4
Product or Component Type	Selector switch
Device short name	XB4
Bezel material	Chromium plated metal
Fixing collar material	Zamak
Mounting diameter	0.87 in (22 mm)
Sale per indivisible quantity	1
Head type	Standard
Shape of signaling unit head	Round
Type of operator	stay put
Operator profile	key switch
Operator position information	3 positions +/- 45°
Contacts type and composition	2 NO
Contact operation	Slow-break
Connections - terminals	Screw clamp terminals, <= 2 x 1.5 mm² with cable end EN/IEC 60947-1 Screw clamp terminals, >= 1 x 0.22 mm² without cable end EN/IEC 60947-1

Complementary

Height	1.85 in (47 mm)
Width	1.18 in (30 mm)
Depth	3.39 in (86 mm)
Terminals description ISO n°1	(13-14)NO (23-24)NO
Net Weight	0.28 lb(US) (0.127 kg)
Resistance to high pressure washer	1015.26 psi (7000000 Pa) 131 °F (55 °C) 0.1 m
Type of Keylock	Key 455
Key withdrawal position	Center
Contacts usage	Standard contacts
Positive opening	Without

Disclaimer: This documentation is not intended as a substitute for and is not to be used for determining suitability or reliability of these products for specific user applications

Torque value	1.24 lbf.in (0.14 N.m) NO changing electrical state
Mechanical durability	1000000 cycles
Tightening torque	7.08…10.62 lbf.in (0.8…1.2 N.m) EN 60947-1
Shape of screw head	Cross Philips no 1 Cross pozidriv No 1 Slotted flat Ø 4 mm Slotted flat Ø 5.5 mm
Contacts material	Silver alloy (Ag/Ni)
Short-circuit protection	10 A cartridge fuse gG EN/IEC 60947-5-1
[Ith] conventional free air thermal current	10 A EN/IEC 60947-5-1
[Ui] rated insulation voltage	600 V 3)EN 60947-1
[Uimp] rated impulse withstand voltage	6 kV EN 60947-1
[Ie] rated operational current	3 A 240 V, AC-15, A600 EN/IEC 60947-5-1 6 A 120 V, AC-15, A600 EN/IEC 60947-5-1 0.1 A 600 V, DC-13, Q600 EN/IEC 60947-5-1 0.27 A 250 V, DC-13, Q600 EN/IEC 60947-5-1 0.55 A 125 V, DC-13, Q600 EN/IEC 60947-5-1 1.2 A 600 V, AC-15, A600 EN/IEC 60947-5-1
Electrical durability	1000000 cycles, AC-15, 2 A 230 V 3600 cyc/h 0.5 EN 60947-5-1 appendix C 1000000 cycles, AC-15, 3 A 120 V 3600 cyc/h 0.5 EN 60947-5-1 appendix C 1000000 cycles, AC-15, 4 A 24 V 3600 cyc/h 0.5 EN 60947-5-1 appendix C 1000000 cycles, DC-13, 0.2 A 110 V 3600 cyc/h 0.5 EN 60947-5-1 appendix C 1000000 cycles, DC-13, 0.5 A 24 V 3600 cyc/h 0.5 EN 60947-5-1 appendix C
Electrical reliability	Λ < 10exp(-6) 5 V 1 mA in clean environment EN/IEC 60947-5-4 Λ < 10exp(-8) 17 V 5 mA in clean environment EN/IEC 60947-5-4
Device presentation	Complete product

Environment

Protective treatment	TH
Ambient Air Temperature for Storage	-40…158 °F (-40…70 °C)
Ambient Air Temperature for Operation	-40…158 °F (-40…70 °C)
Overvoltage category	Class I IEC 60536
IP degree of protection	IP66 IEC 60529 IP69 IP69K IP67
NEMA degree of protection	NEMA 13 NEMA 4X
IK degree of protection	IK06 with keyhole cover ZBGP conforming to IEC 50102
Standards	CSA C22.2 No 14 EN/IEC 60947-5-4 EN/IEC 60947-1 EN/IEC 60947-5-5 UL 508 EN/IEC 60947-5-1 JIS C8201-5-1 JIS C8201-1
Product Certifications	UL BV CSA LROS (Lloyds register of shipping) GL DNV
Vibration resistance	5 gn 2…500 Hz)IEC 60068-2-6
Shock resistance	30 gn 18 ms) half sine wave acceleration IEC 60068-2-27 50 gn 11 ms) half sine wave acceleration IEC 60068-2-27

Ordering and shipping details

Category	22468-PUSHBUTTONS,22MM(METAL) NEW
Discount Schedule	CS2
GTIN	3389110887150
Returnability	Yes
Country of origin	FR

Packing Units

Unit Type of Package 1	PCE
Number of Units in Package 1	1
Package 1 Height	1.42 in (3.6 cm)
Package 1 Width	2.17 in (5.5 cm)
Package 1 Length	3.62 in (9.2 cm)
Package 1 Weight	5.64 oz (160 g)
Unit Type of Package 2	BB1
Number of Units in Package 2	5
Package 2 Height	3.39 in (8.6 cm)
Package 2 Width	1.30 in (3.3 cm)
Package 2 Length	10.24 in (26 cm)
Package 2 Weight	28.25 oz (801 g)
Unit Type of Package 3	S02
Number of Units in Package 3	50
Package 3 Height	5.91 in (15 cm)
Package 3 Width	11.81 in (30 cm)
Package 3 Length	15.75 in (40 cm)
Package 3 Weight	18.43 lb(US) (8.361 kg)

Offer Sustainability

Sustainable offer status	Green Premium product
California proposition 65	WARNING: This product can expose you to chemicals including: Lead and lead compounds, which is known to the State of California to cause cancer and birth defects or other reproductive harm. For more information go to www.P65Warnings.ca.gov
REACh Regulation	REACh Declaration
EU RoHS Directive	Pro-active compliance (Product out of EU RoHS legal scope) EU RoHS Declaration
Mercury free	Yes
China RoHS Regulation	China RoHS declaration
RoHS exemption information	Yes
Environmental Disclosure	Product Environmental Profile
Circularity Profile	End of Life Information
WEEE	The product must be disposed on European Union markets following specific waste collection and never end up in rubbish bins.

Contractual warranty

Warranty	18 months

Product data sheet XB4BG33

Dimensions Drawings

Dimensions

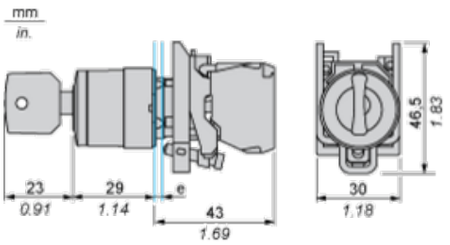

e : clamping thickness: 1 to 6 mm / 0.04 to 0.24 in.

Panel Cut-out for Pushbuttons, Switches and Pilot Lights (Finished Holes, Ready for Installation)

Connection by Screw Clamp Terminals or Plug-in Connectors or on Printed Circuit Board	Connection by Faston Connectors
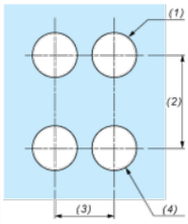	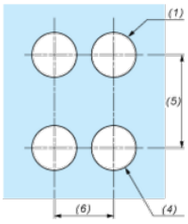
(1) Diameter on finished panel or support **(2)** 40 mm min. / 1.57 in. min. **(3)** 30 mm min. / 1.18 in. min. **(4)** Ø 22.5 mm / 0.89 in. recommended (Ø 22.3 mm $_{0}^{+0.4}$ / 0.88 in. $_{0}^{+0.016}$) **(5)** 45 mm min. / 1.78 in. min. **(6)** 32 mm min. / 1.26 in. min.	

Product data sheet XB4BG33

Technical Illustration

Dimensions

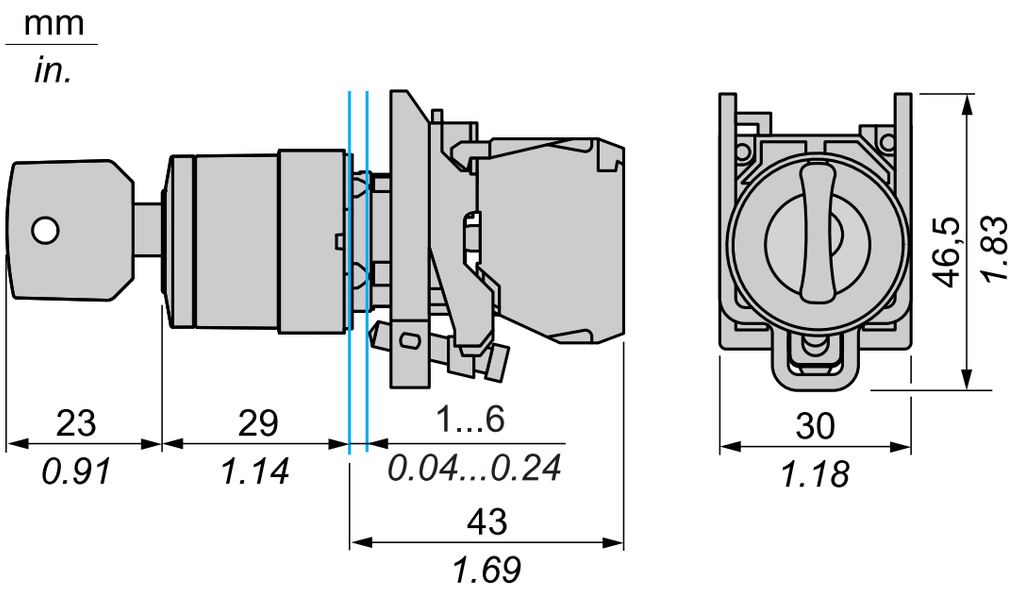

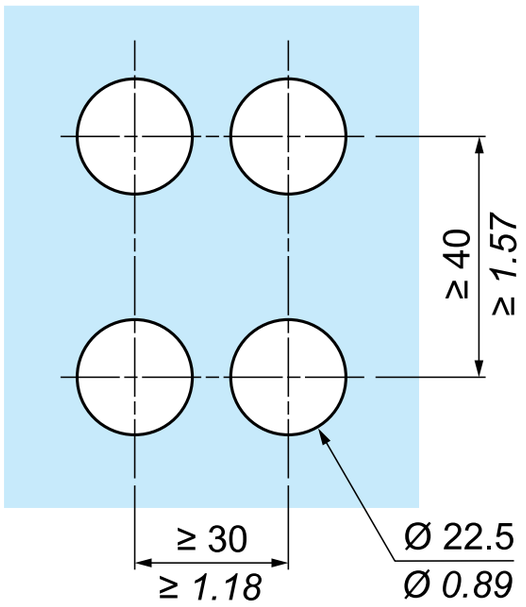

Recommended replacement(s)