omniconnect

P.C.B. connectors

Screw clamp connection

Spacing 5.08 mm

Body : UL94 V0

CE

Plug shape
TILE

Sockets for plugs

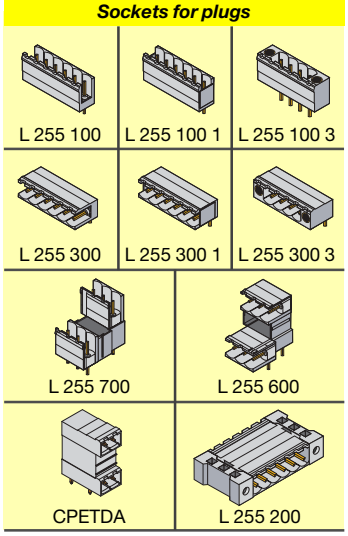

L 245 200

Screw clamp plug wires parallel to connection

Spacing 5.08 mm *.200"*

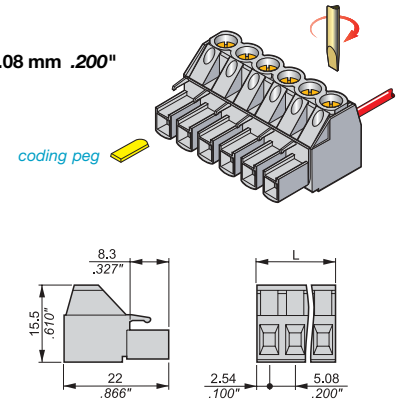

L 245 200 3

Screw clamp plug wires parallel to connection fitted with screw type flanges

Spacing 5.08 mm *.200"*

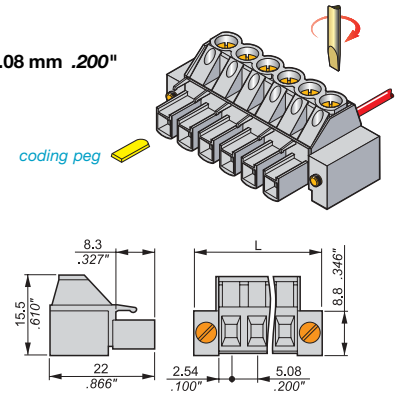

Part number

Spacing 5.08 mm Grey body

N. Poles		L. mm
2	**L 245 202 01 000**	10.16
3	**L 245 203 01 000**	15.24
4	**L 245 204 01 000**	20.32
5	**L 245 205 01 000**	25.40
6	**L 245 206 01 000**	30.48
7	**L 245 207 01 000**	35.56
8	**L 245 208 01 000**	40.64
9	**L 245 209 01 000**	45.72
10	**L 245 210 01 000**	50.80
12	**L 245 212 01 000**	60.96
14	**L 245 214 01 000**	71.12
15	**L 245 215 01 000**	76.20
16	**L 245 216 01 000**	81.28
18	**L 245 218 01 000**	91.44

Other numbers of poles 19...36, consult us

Part number

Spacing 5.08 mm Grey body

N. Poles		L. mm
2	**L 245 202 31 000**	20.32
3	**L 245 203 31 000**	25.40
4	**L 245 204 31 000**	30.48
5	**L 245 205 31 000**	35.56
6	**L 245 206 31 000**	40.64
7	**L 245 207 31 000**	45.72
8	**L 245 208 31 000**	50.80
9	**L 245 209 31 000**	55.88
10	**L 245 210 31 000**	60.96
12	**L 245 212 31 000**	71.12
14	**L 245 214 31 000**	81.28
15	**L 245 215 31 000**	86.36
16	**L 245 216 31 000**	91.44
18	**L 245 218 31 000**	101.60

Other numbers of poles 19...36, consult us

Characteristics

Wire size

	DIN-VDE	UL	CSA	NFC-UTE
Solid	0.2-2.5mm²	22-14 AWG	22-14 AWG	0.2-2.5mm²
Stranded	0.2-2.5mm²			0.2-2.5mm²

Voltage

V	~	250 Gr.C	300	300	250 Cat.C
	=	250 Gr.C			250 Cat.C

Current at 20° C

A	12	10	15	12

Rated wire size

	14 AWG	14 AWG	14 AWG	14 AWG

Other characteristics

Wire stripping length	Recomm. screwdriver	Recomm. torque	Protection
	3.5 mm *.138"*	0.4 Nm *3.5 lb.in*	IP 20 *NEMA 1*

Max. working temperature :	85 °C
Contact resistance :	≤ 5 mΩ
Contact plating :	gold plating on request

L 299 083

Strain relief housing covers for series L 245 200 and L 245 200 3 plugs

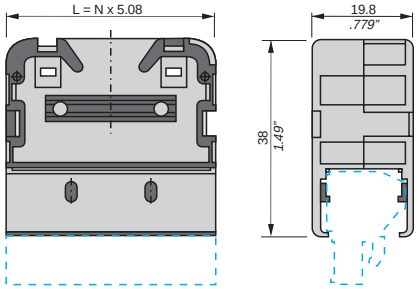

Strain relief housing with self tapping screws capable of holding 22-14 AWG wires.
Covers snap together without the use of tools giving the user the possibility of having wires exit at 180° or 45° using a fixing strap.

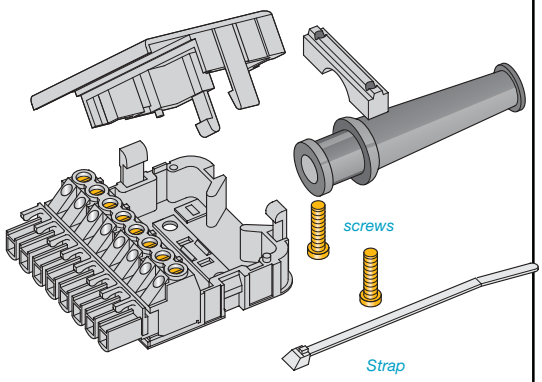

plug 245 200 and 245 200 3

Approvals

Accessories

		Type	Part number	L. mm	Type	Part number	L. mm
1	Coding peg		**L 299 084 06 000**			**L 299 084 06 000**	
2	Housing	8 poles	**L 299 083 08 000**	40.64	8 poles	**L 299 083 08 000**	40.64
		12 poles	**L 299 083 12 000**	60.96	12 poles	**L 299 083 12 000**	60.96
		16 poles	**L 299 083 16 000**	81.28	16 poles	**L 299 083 16 000**	81.28
		18 poles	**L 299 083 18 000**	91.44	18 poles	**L 299 083 18 000**	91.44
3	Screws for housing						
4	Strap for housing						
R	See section on marking — Marking method	Marking using adhesive strips 1...25		**L 93 025 05 100**	Marking using adhesive strips 1...25		**L 93 025 05 100**