	REVISED	DATE	APP.
1			
2			
3			

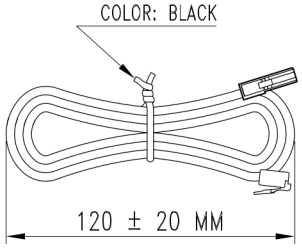

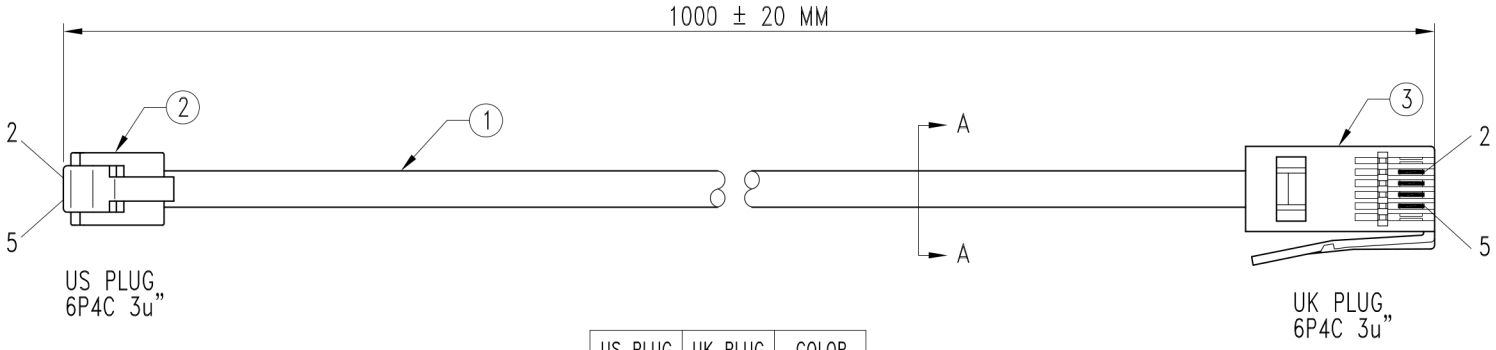

US PLUG	UK PLUG	COLOR
2	3	BLACK
3	2	RED
4	5	GREEN
5	4	YELLOW

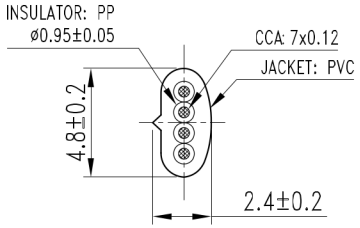

SEC A-A

UNSIFTED TOLERANCE: ± 0.2

PART	NAME	DESCRIPTION	QTY	COLOR	MATERIAL	VENDER	REMARK
3	UK PLUG	6P4C/3u"	1	WHITE	PC		
2	US PLUG	6P4C/3u"	1	TRANSPARENT	PC		
1	4C CABLE	28AWG/7x0.12	1	BLACK	SEE:SEC A-A		

	ISSUE: A	TITLE: US PLUG TO UK PLUG WITH LINE CORD
SHEET: 1/1	SIZE: A4	CUST P/N: TE08490
SCALE 1:1	UNIT: MM	
DRAW: Zh	DATE:	
CHECK:	APPROVE:	