used for: D-SUB

9 pos.

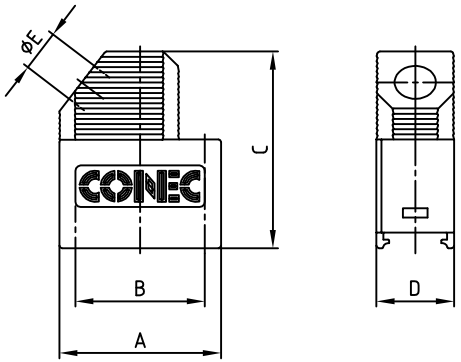

15 - 50 pos.

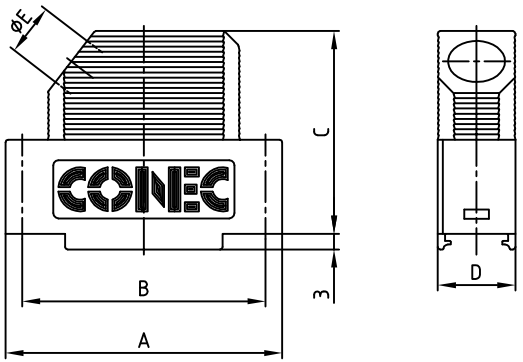

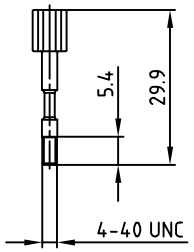

Metal screw with plastic head

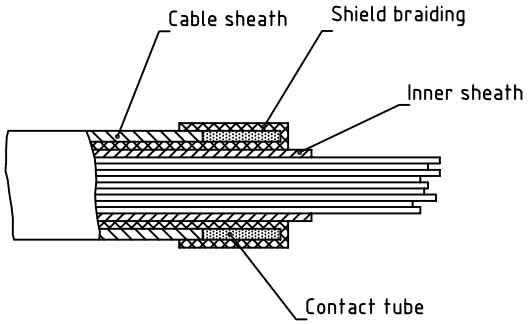

MATERIAL:
HOOD: PC GF 20 UL 94 V-0; GREY
METAL SCREW: Ms 58 HARD; NICKEL PLATED
CABLE CLAMP: Cu Ni 18 Zn 20
SCREWS FOR CABLE CLAMP: STEEL; NICKEL PLATED

ⓑ

Part No: Single package	Part No: Bulk package	No. of pos.	A	B	C	D	ØE
165X16119XE	165X16119X	9	31.30	25.0	35.15	15.0	8.0
165X16129XE	165X16129X	15	39.62	33.3	39.15	15.0	9.0
165X16139XE	165X16139X	25	53.52	47.0	39.15	15.0	11.0
165X16149XE	165X16149X	37	69.80	63.5	39.15	15.0	11.0
165X16159XE	165X16159X	50	67.41	61.1	39.15	19.0	14.5

Directive 2002/95/EC „RoHS" Compliant

THIS DRAWING MAY NOT BE COPIED OR REPRODUCED IN ANY WAY, AND MAY NOT BE PASSED ON TO A THIRD PARTY WITHOUT WRITTEN PERMISSION. OWNERSHIP AND COPYRIGHT OF CONEC GmbH
DO NOT ALTER CAD DRAWING BY HAND

rev.	description	date	name
1 x b	Ä 3803	04.11.10	HS
a	Origin		

	date	name
2001		
drawn	03.09.	E. Mickenbecker
appd.	03.09.	A. Mickenbecker
norm		
d-old		

tolerance

scale: 1:1
material: SEE NOTES

title:
PLASTIC HOOD
9-50pos.
shielded version, with screw with plastic head

dwg no: 16K1A286A
AutoCAD 2000 | DIN-A 3 | sh: 1/1

part no: SEE TABLE