MDD20A
20Amp 6V-30V DC Motor Driver (2 Channels)

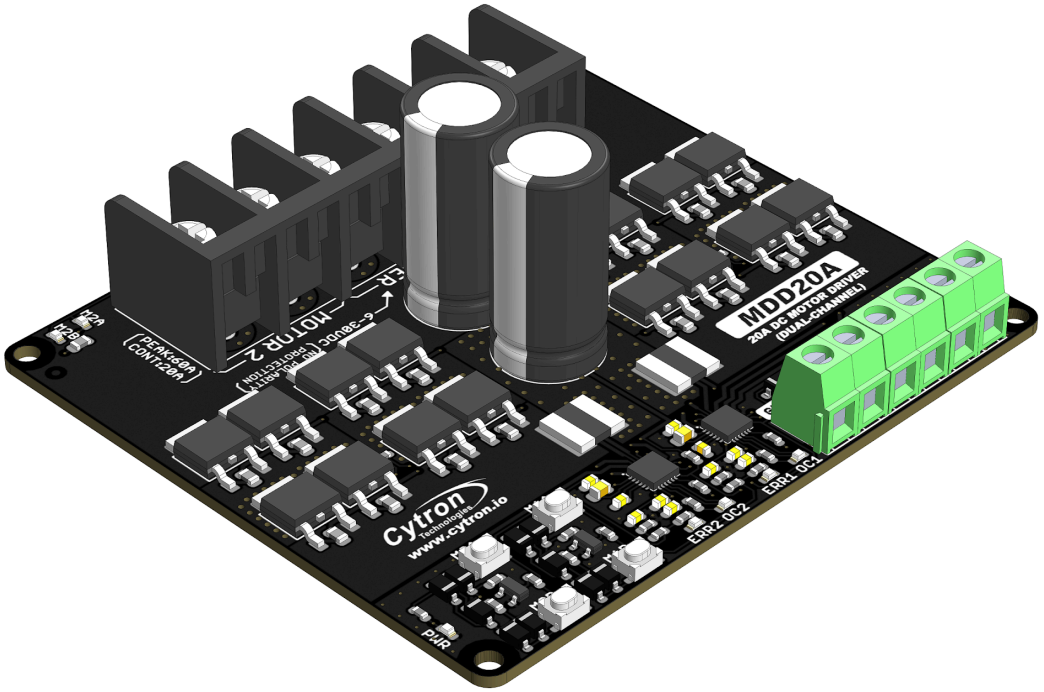

Datasheet

Rev 1.0
July 2020

Information in this publication regarding device applications and the like is intended through suggestion only and may be superseded by updates. It is your responsibility to ensure that your application meets with your specifications. No representation or warranty is given and no liability is assumed by Cytron Technologies Incorporated with respect to the accuracy or use of such information or infringement of patents or other intellectual property rights arising from such use or otherwise. Use of Cytron Technologies's products as critical components in life support system is not authorized except with express written approval by Cytron Technologies. No licenses are conveyed, implicitly or otherwise, under any intellectual property rights.

1. BOARD LAYOUT & FUNCTION

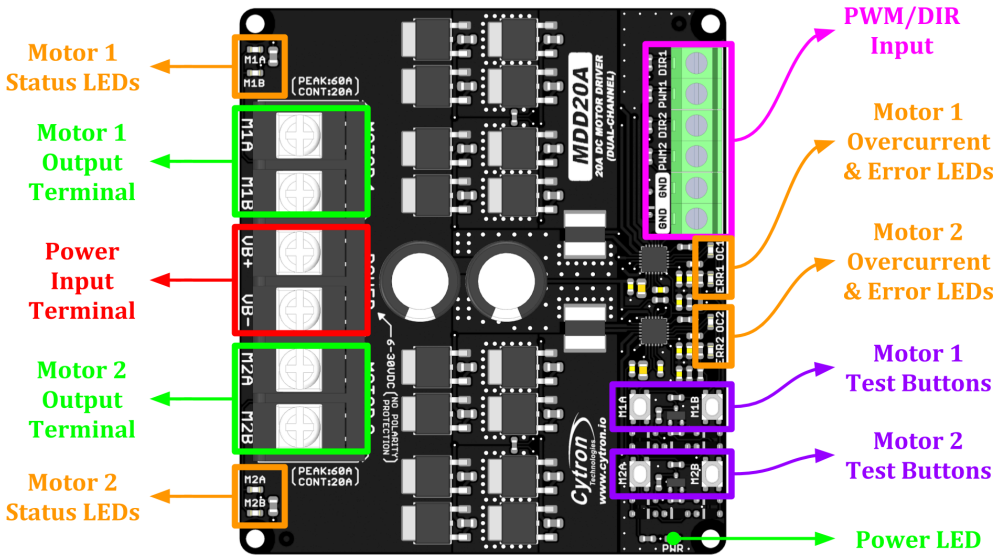

Figure 1: MDD20A Board Functions

Function	Description
Power Input Terminal	Connect to battery. ● VB+ : Positive ● VB- : Negative *Warning : Connecting in reverse polarity will damage the motor driver instantaneously.*
Motor Output Terminal	Connect to motor terminal. Motor direction is depending on the polarity.
Power LED	Turn on when powered up.
Motor Status LEDs	Turn on when the motor is running. ● MxA : Forward* ● MxB : Backward*
Error LED	Turn on during undervoltage shutdown or hardware fault. Please contact support@cytron.io for more information.
OC (Overcurrent) LED	Turn on when current limiting is in action. Current limit threshold is depending on the board temperature.
Test Buttons	Press to test the functionality of the motor driver. Motor will run at full speed. ● MxA : Forward* ● MxB : Backward*
PWM/DIR Input	Control the motor with PWM & DIR signal. ● DIRx : Direction input. ● PWMx : PWM input for motor speed control. ● GND : Signal ground.

Table 1: MDD20A Board Functions

* *Actual motor direction is depending on the motor connection.*
Swapping the connection (MxA & MxB) will reverse the direction.

2. SPECIFICATIONS

No	Parameters		Min	Max	Unit
1	Power Input Voltage		6	30	V
2	Maximum Motor Current (Per channel)	Continuous	-	20	A
		Peak *1	-	60	A
3	Logic Input Voltage (PWM & DIR)	Low Level	0	0.8	V
		High Level	1.5	15 *2	V
4	PWM Frequency *(Output frequency is same as input frequency)*	Standard	DC	20	KHz
		Extended *3	20	40	KHz

Table 2: MDD20A Absolute Maximum Ratings

*1 *Peak current is limited by the overcurrent protection circuit. Actual current limit is depending on board temperature. Value shown is at room temperature (25 - 30 degree Celsius).*

*2 Maximum input voltage can be extended up to 30V by connecting a 10K ohm resistor in series.

*3 When the PWM operates in extended frequency range, continuous motor current will be reduced.

3. DIMENSION

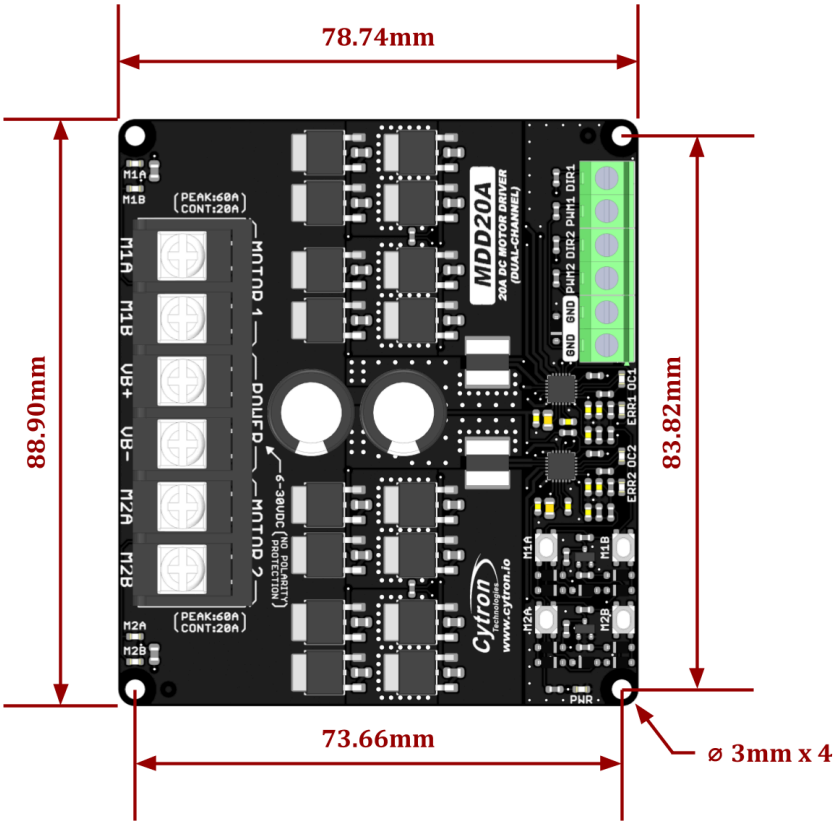

Figure 2: MDD20A Dimension

4. INTERFACE

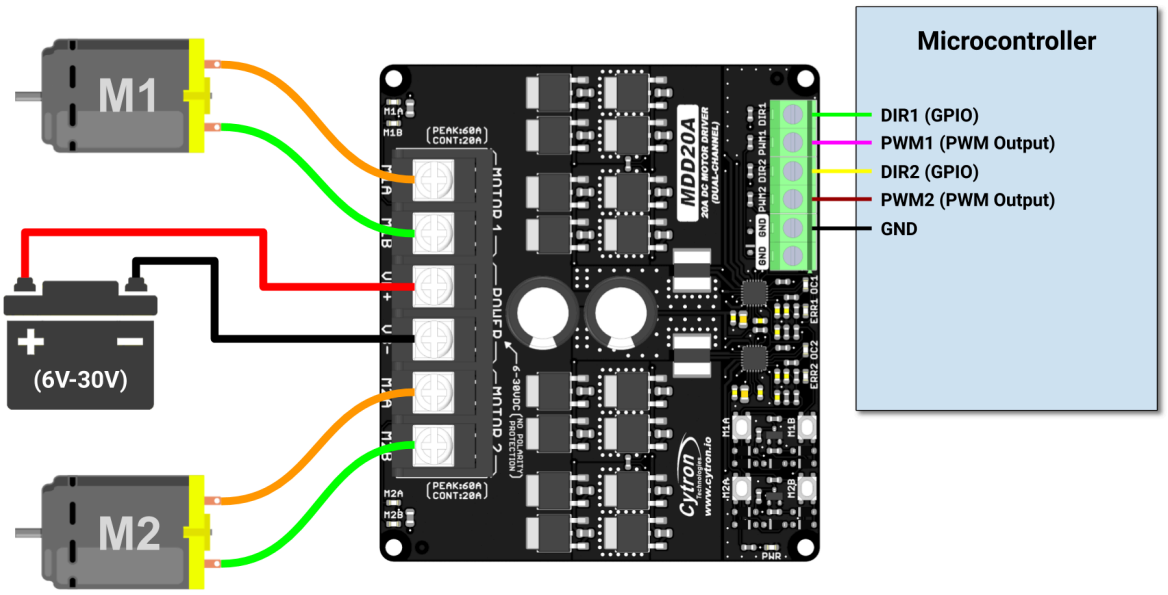

Figure 3: PWM & DIR Input Connection Diagram

PWMx	DIRx	Output A (MxA)	Output B (MxB)	Motor x
Low	**X (Don't Care)**	Low	Low	Brake
High	**Low**	High	Low	Forward*
High	**High**	Low	High	Backward*

Table 3: PWM/DIR Input Truth Table

* *Actual motor direction is depending on the motor connection.*
Swapping the connection (MxA & MxB) will reverse the direction.

5. PROTECTION FEATURES

- **Overcurrent Protection with Active Current Limiting**

  When the motor is trying to draw more current than what the motor driver can supply, the PWM to the motor will be chopped off and the motor current will be maintained at maximum current limit. This prevents the motor driver from damage when the motor stalls or an oversized motor is hooked up. OC LED will turn on when current limiting is in action.

- **Temperature Protection**

  The maximum current limiting threshold is determined by the board temperature. The higher the board temperature, the lower the current limiting threshold. This way, MDD20A is able to deliver its full potential depending on the actual condition without damaging the MOSFETs.

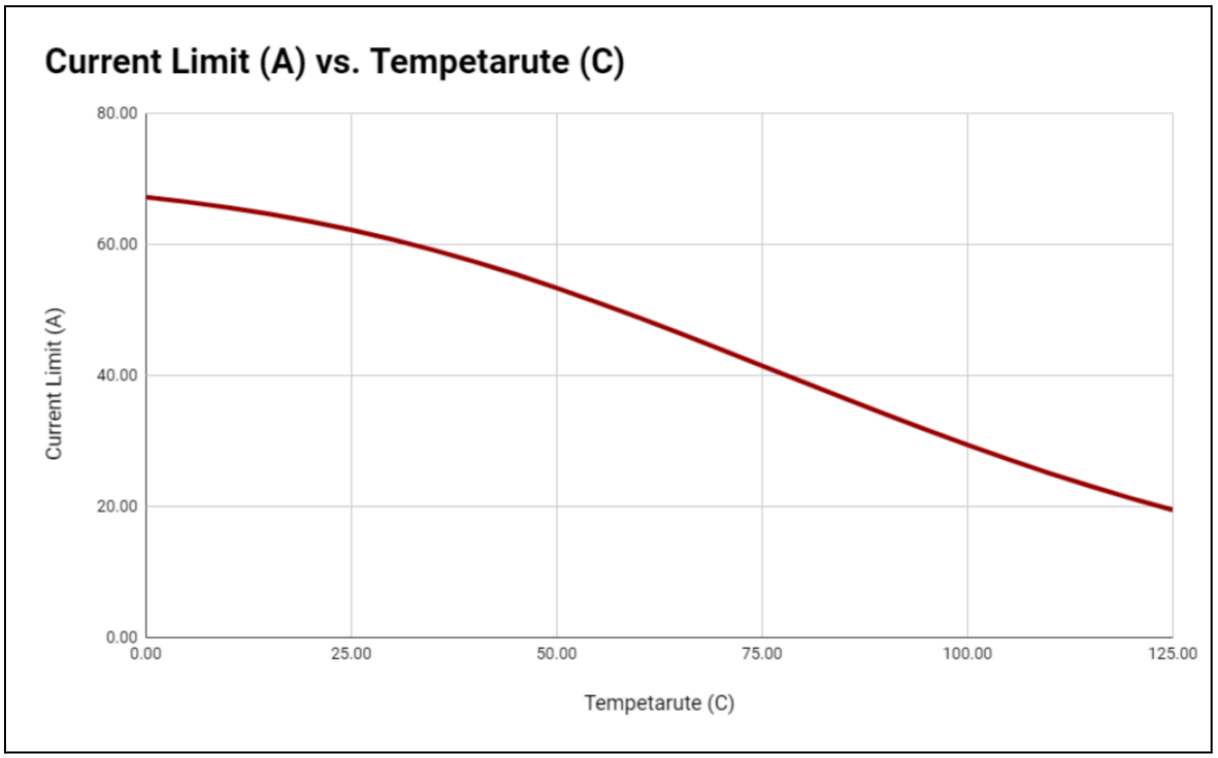

Figure 4: Maximum Current Limit vs Temperature Graph (Per channel)

- **Undervoltage Shutdown**

  The motor driver output will be shut down when the power input voltage drops below the lower limit. This is to make sure the MOSFETs have sufficient voltage to fully turn on and do not overheat. ERR LED will turn on during undervoltage shutdown.

Prepared by:

Cytron Technologies Sdn Bhd
www.cytron.io
No. 1, Lorong Industri Impian 1,
Taman Industri Impian,
14000 Bukit Mertajam,
Penang, Malaysia.

Tel: *+604 - 548 0668*
Fax: *+604 - 548 0669*

Email:
support@cytron.io
sales@cytron.io

Created by *Cytron Technologies Sdn Bhd* – All Rights Reserved