QRP II Remote Panel

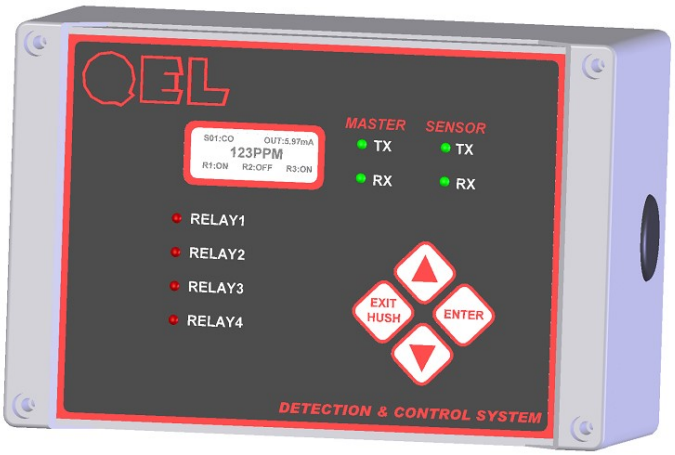

INSTALLATION
OPERATION AND MAINTENANCE
MANUAL

QUATROSENSE ENVIRONMENTAL LTD.
5935 OTTAWA STREET, PO BOX 749 RICHMOND, ONTARIO CANADA K0A 2Z0
PHONE: (613) 838-4005 FAX: (613) 838-4018
Web: www.QELsafety.com Email: QEL@QELsafety.com

Table Of Contents

1. GENERAL INFORMATION 2

1.1 SYSTEM OVERVIEW 2
1.2 KEY FEATURES 2

2. SPECIFICATIONS 3

3. QRP ADDRESSING 5

4. INSTALLATION 6

4.1 TYPE AND LOCATION 6
4.2 CABLING 7
4.3 CONNECTORS 8
4.4 POWER SUPPLY CONNECTION 8
4.5 RS-485 INSTALLATION 8
4.6 M-CONTROLLER AND QRP CONNECTION 10
4.7 ON-BOARD 4X RELAYS 10

5. FUNCTION AND CONFIGURATION 11

5.1 KEYPAD AND INDICATORS 11
5.2 HOLD MODE: 11
5.3 HUSH BUZZER AND HORN 11
5.4 MENU MODE: 12
5.5 OVERRIDE MODE: 12
5.6 MENU MODE: MENU TREE 12
5.7 MENU "1_SYSTEM SETTING" 13
5.8 MENU "2_RELAY STYLE" 13
5.9 MENU "3_OVERRIDE" 13

WARRANTY STATEMENT 14

1. General Information

1.1 System Overview

QRP Remote Panel has been designed to connect to M-Controller Gas Monitoring System, which can host up to 12 QRP or M-Relay units to provide flexible and programmable controls. The QRP units display the relay status and gas concentration; perform actions programmed in the M-Controller.

Each QRP contains 4 relays for alarms, fans etc. and 3 24VDC transistor outputs for buzzer, strobe light and horn.

Although the QRP is designed to perform actions programmed in the M-Controller, it's possible to override the 4 relays and 3 transistor outputs through the keypad and LCD display screen and clear the override, which makes the M-Controller System compliant with safety regulations, such as CSA Standard B52 Mechanical refrigeration code.

The enclosure of the QRP is rated IP66 & NEMA 4, 4X, 12 & 13 and is UL listed. Relay status indicator and RS-485 communication indicator are visible at the front of the enclosure.

QRP power supply is designed for 24VDC/AC.

1.2 Key Features

- 128 x 32 Graphic LCD Display c/w backlight
- 4 tactile & audible keypads
- RS-485 digital sensor port with communication indicators
- 4 x 5A SPDT relay module
    - Relays activation programmed in M-Controller
    - Relay status indicators
- 24VDC Buzzer, strobe, and horn outputs
- Enclosure meets IP66 & NEMA 4, 4X, 12 & 13 ratings
- Operation at 15–24VAC or 18-30VDC
- CSA/UL approval (pending)

2. Specifications

Note: **Installing or using this equipment in a manner not specified by the manufacturer could cause electric shock, bodily injury, or risk of fire.**

Input Power:

Voltage: 24VDC nominal, range 18 to 30VDC
24VAC nominal, range 15 to 24VAC 50/60HZ

Note: QRP-II has full-wave rectifier and half-wave rectifier circuit on board for flexibility. You will damage devices if you mix half wave and full wave rectifiers on the same AC source. Use extreme caution when sharing a common AC source. Sharing a common DC source is less problematic.

Current:	QRP-II:	max. 0.75 A (fuse protected)
	Strobe & Horn:	max. 0.25 A (fuse protected)

Note: No external over-current protection is required. Over-current protection is provided by means of fuses F1 and F2/3. See fuse specification below.

Fuse:

F1 on I/O Board for Q4C-II:	Polyswitch 750mA
F2 / F3 on I/O Board for Strobe/Horn output:	Polyswitch 250mA

Polyswitch device resets after the fault is cleared and power to the circuit is removed

---

Enclosure:

IP66 & NEMA 4, 4X, 12 & 13 ratings
UL listed 508 listed (File # E65324)

Environmental conditions:

Location:	Indoor use only
Altitude:	Up to 2 000 m
Temperature:	-20 °C to 50 °C
Relative Humidity:	0 to 95% RH (non-condensing) up to 31 °C Decreasing linearly to 80% at 40 °C
Pollution Degree:	2, in accordance with IEC 664.

Display & Keypad:

LCD display c/w backlight
4x tactile & audible keypad

Panel Indicators:	8 Status LEDs RS-485 port TX/RX Status LED for Sensor Network RS-485 port TX/RX Status LED for Modbus or BAC-Box 4 Relay Status LEDs
On-Board Relays:	4 Relays SPDT, Dry contacts, Relay1 to Relay4 Resistive load: 5.0A at 250VAC 5.0A at 30VDC Inductive load: 3.7A at 250VAC 3.7A at 30VDC
On-Board Buzzer	Used for internal warning and alarm, 3700 Hz Continuous It's not used for Alarm-Sounding Appliance. For external Alarm-Sounding Appliance, they can be connected to the below Horn/Strobe terminal blocks, the Alarm-Sounding Appliance sound-pressure level should be at least 85dB at 10 feet according standard UL2017 Audibility Test
Horn & Strobe:	Two 24 VDC transistor driver are for Horn and Strobe Dedicated 24VDC terminals are supplied for connection to standard strobe and horn set. Maximum of 250mA on the 24VDC power supply Buzzer, Strobe and Horn can be programmed individually. They are addressed to Relay5, Relay6 and Relay7, combined with onboard Relay1 to Relay4 can be programmed in M-Controller system.
Size:	180mm X 120mm X 90mm
Weight:	Less than 1.5lbs (0.680 kg)
Certification:	Pending: Standard UL2017 and CSA 61010-1

3. QRP Addressing

QRP address can be set in [MENU] => [System Settings] => [Address]. Default is 3.

The QRP valid address in an M-Controller System is from 0 to 11. Each QRP module contains 4 relays and 3 transistor outputs. **The 4 relays are addressed Relay1 to Relay4 or My R1 to My R4 in the QRP module, the 3 transistor outputs (buzzer, strobe, horn) are addressed to Relay5, Relay6 and Relay7 or My BZ, My ST, My HR.**

Relay1 to Relay7 are only named in the local QRP. When the QRP is connected to a M-Controller, the QRP relay numbering is same as the M-Relay relay numbering or M-Annunciator numbering in the M-Controller system. Relay numbering from the standpoint of the M-Controller is numbered consecutively with numbers 1, 2 and 3 being the M-Controller internal relays and numbers 4 through 99 the relays in the remote modules, such as M-Relay or QRP.

The following table indicates the relationships. **QRP address can be set through [Menu].**

QRP Address	Relay Numbers Per M-Controller Menu Assignments	QRP Address	Relay Numbers Per M-Controller Menu Assignments
0	4 to 10	6	52 to 58
1	12 to 18	7	60 to 66
2	20 to 26	8	68 to 74
3	28 to 34	9	76 to 82
4	36 to 42	10	84 to 90
5	44 to 50	11	92 to 98

For example, if the QRP address is #1, the Relay1 to Relay4, Buzzer, Strobe and Horn in the QRP are addressed as below:

- Relay1 – Relay4: addressed to Relay12 – Relay15 in M-Controller
- Buzzer Output: addressed to Relay16 in M-Controller
- Strobe Output: addressed to Relay17 in M-Controller
- Horn Output: addressed to Relay18 in M-Controller

4. Installation

4.1 Type and Location

The QRP is designed and certified for installation in a fixed location where is not subject to shock and vibration. Please observe the temperature and humidity specifications above for ambient conditions. Observe the possibility of leaks or possible water damage from cleaning done in the area.

The mounting height and location should provide easy access to the wiring terminals and front-panel. Backlighting is provided for the display in case of low lighting conditions.

It is recommended that controllers be installed 5 feet (1.5m) above the floor, at approximate eye level. Securely mount the controller using the appropriate screws.

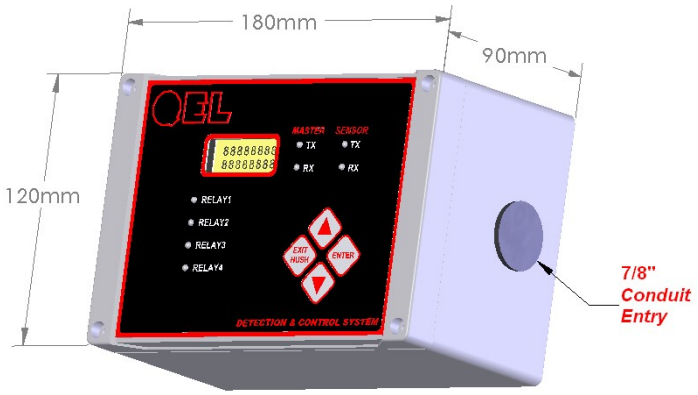

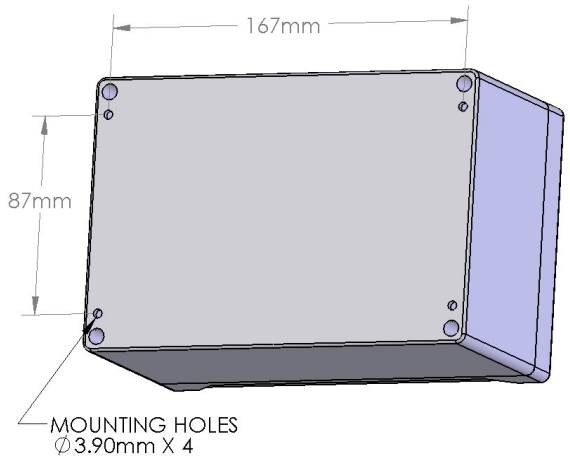

The controller also comes with a mounting feet kit as an option. The same wall mounting holes can used to install the feet kit.

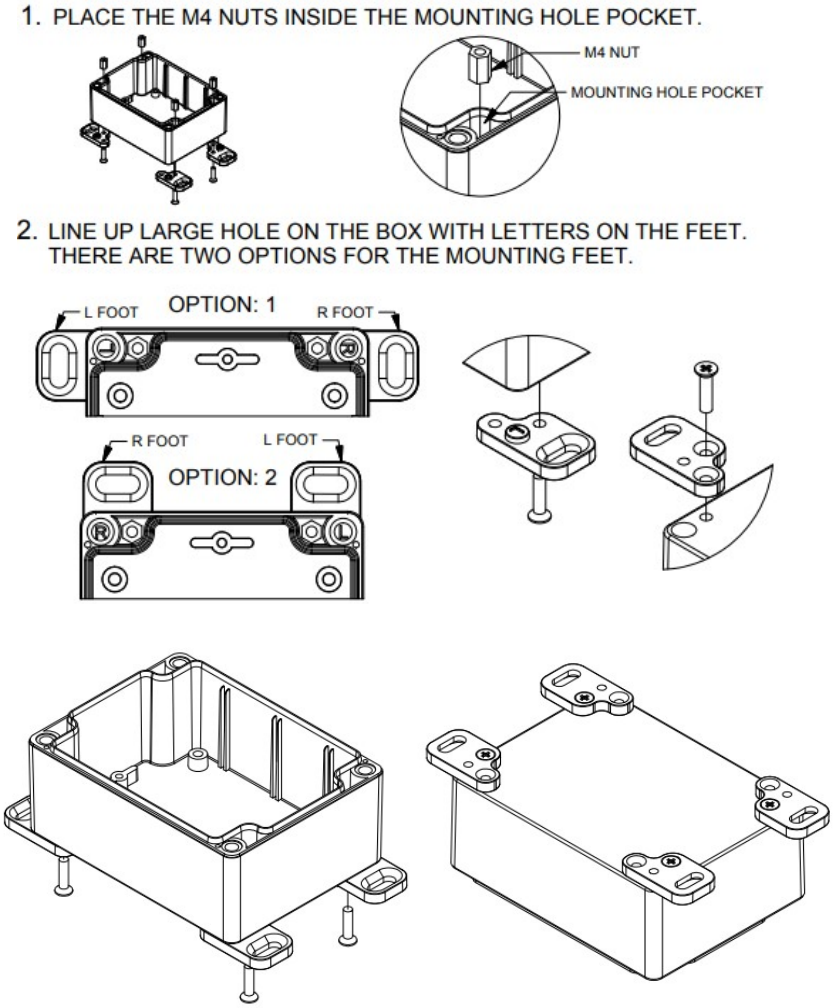

4.2 Cabling

Approved cable conduit and conduit connectors should be used to ensure a safe and reliable installation. Check the local wiring code for more information. Make sure all conduit connectors are screwed in tight and that they are not coming in contact with any bare conductors.

You might drill an additional access hole to bring the wires into the NEMA 4X enclosure. The access hole should be drilled on the side of the enclosure.

Warning: Be sure to look inside the unit prior to drilling so that to make sure there is sufficient clearance for the hole and fitting that you are using. Seal conduit to prevent foreign material from entering the enclosure.

4.3 Connectors

Make sure to observe wiring to the correct terminal blocks. Removable terminal blocks are provided. Make sure there is no confusion about which terminal block to wire to.

Note: **Incorrect wiring to any of the terminals of the Q4 Controller could cause permanent damage to the unit, which is not covered by the warranty. Incorrect wiring could also cause fire, electric shock, or bodily injury. Please observe the polarity on all connections.**

Warning: **Disconnect the main supply and switch off the QRP when changing any of the wiring to the unit. Be especially cautious when wiring high voltage to the relays. Do not touch sensitive components on the circuit card to prevent static discharge damage to the unit.**

4.4 Power Supply Connection

The QRP-II power supply Voltage requirements are nominally 24VAC/DC.

NOTE: QRP-II has full-wave rectifier and half-wave rectifier circuit on board for flexibility. You will damage devices if you mix half wave and full wave rectifiers on the same AC source. Use extreme caution when sharing a common AC source. Sharing a common DC source is less problematic.

QEL supplies one standard transformer

- M-Transformer 120 to 24 VAC 200 VA [QEL SKU#: 6500-0024]

4.5 RS-485 Installation

The RS-485 (EIA-485) standard specifies the electrical characteristics for a digital communication link allowing communication between multiple devices on a single link. The RS-485 uses two wires, A+ and B-, and works on the voltage difference between them. If the voltage difference is positive, then that is a “1” if negative then that is a “0”.
Connections: Wire terminals A+ to A+ to A+ etc., and B- to B- to B- etc.
Terminator: QRP supplies two end-of-line resistor on the main board, one for sensor RS-485 port, one for Modbus/BACnet port, they are chosen using a jumper at J3, J4.

- J3/4 1-2: Terminator Disabled/Off (Default)
- J3/4 2-3: Terminator Enabled/On

Factory default setting is disabled terminator.

RS-485 Driver Replacement: RS-485 lines in heavy industrial environments are sometimes subjected to magnetic disturbances causing sufficient inducted power surges to damage the driver integrated circuit (IC). The IC U5 and U6 have sockets on the circuit card for ease of replacement in the field.

U5 U6: RS-485 TRANSCEIVER [QEL SKU#: 3200-0044]

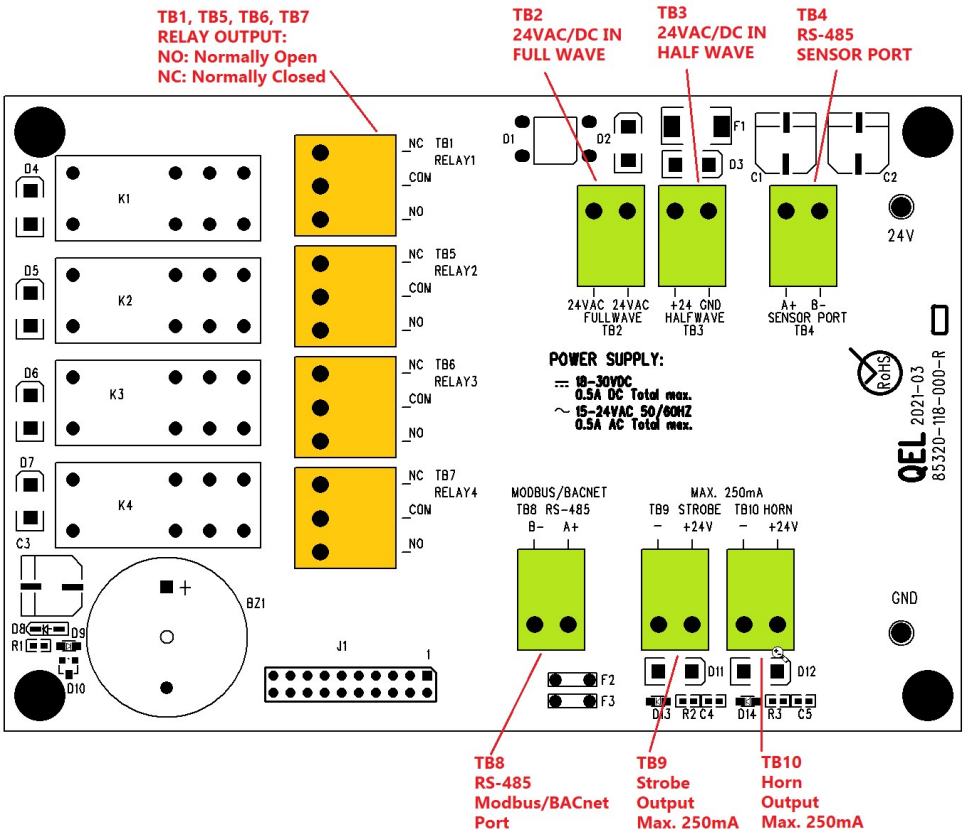

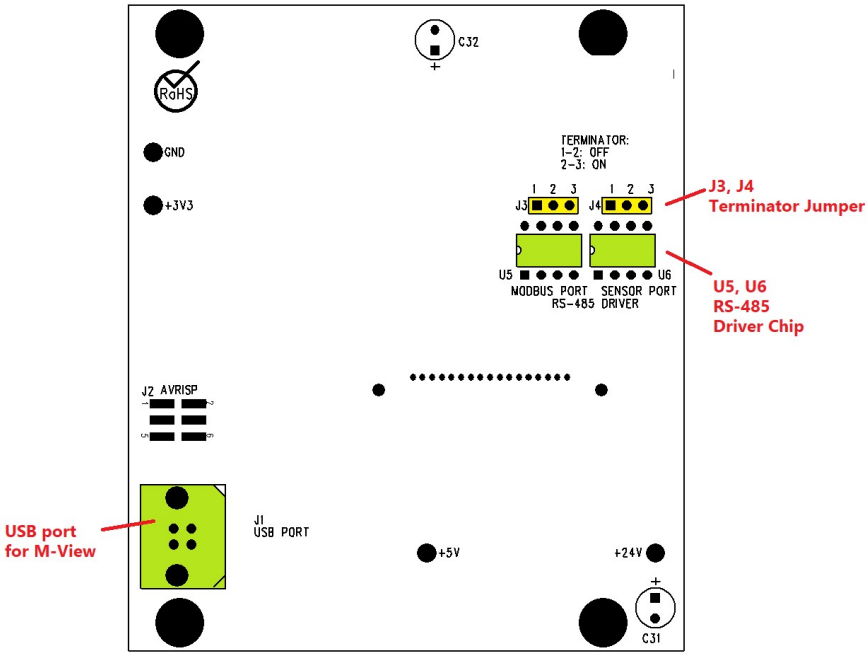

Buzzer, Strobe and Horn Outputs

The QRP supports on-board buzzers as well as strobe and horn outputs. They can be programmed in M-Controller individually.

The outputs are 24 VDC transistor outputs; the maximum current is not more than 250mA. They are located on the I/O motherboard inside the QRP.

Note: Strobe and Horn are not included in the QRP packing.

4.6 M-Controller and QRP Connection

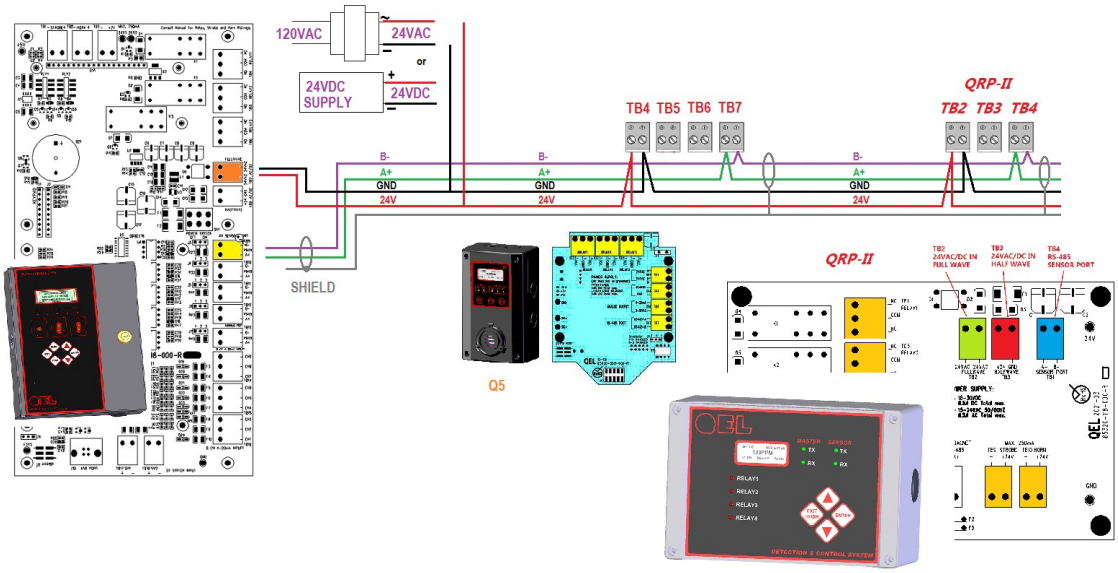

4.7 On-Board 4x Relays

Each relay can be programmed individually.

Switching capability of each relay is:

- 5.0 A maximum resistive 250VAC, 30 VDC
- 3.7 A maximum inductive 240VAC
- 3.7 A maximum inductive 30 VDC

Relay outputs are usually used to control other equipment, such as fans, lights, horns, or visual alarm indicators.

Each relay supports two working modes, which can be set through [Menu] => [Relay Style]:

- Relay Style: Work as normal relay

- Buzzer Style: When the relay is used to control an external Buzzer or Horn. Working at buzzer style will make the relay have the same function of the onboard buzzer. It will be switched off when the key [Exit/Hush] is pressed to perform Hush Buzzer function.

5. Function and Configuration

5.1 Keypad and Indicators

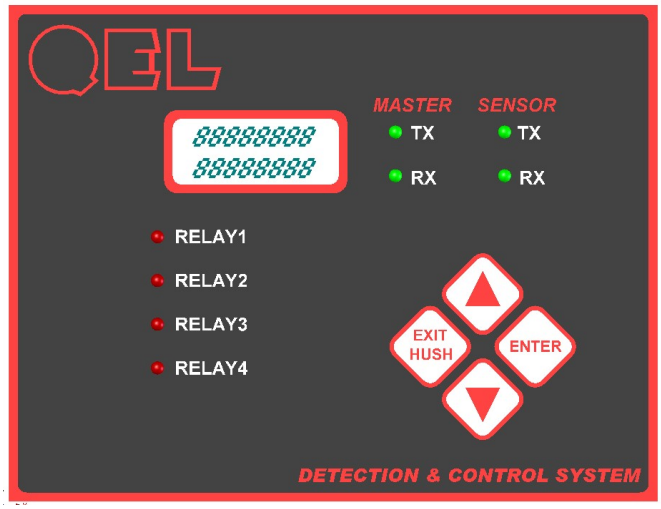

Sensor TX, RX: When the QRP is connected to the M-Controller, the traffic of the communication can be monitored visually through the two RS-485 indicators. One is RX LED, which indicates the data stream from controller and received in the QRP. The other is TX LED, which indicates the data stream sent out of the QRP to the M-Controller.

Master TX, RX: No connection in the QRP

Note: **If the TX LED or the RX LED is always ON, that means the communication has a problem. See Troubleshooting for RS-485.**

Relay1-4 LED: Indicate the status of each relay. When the relay is actuated/closed, the Relay LED is ON. When the relay is de-actuated/open, the relay LED is OFF.

5.2 Hold Mode:

Press key [Up] or [Down] to scroll through the display items, at the same time the display goes to “Hold Mode” with display “*” at that row end. The Hold Mode will stop at that point for 3 minutes.

5.3 Hush Buzzer and Horn

Press the [**Exit/Hush]** button to silence the buzzer, horn and buzzer style relays. Press the Exit/Hush button again to remove the hush function.

5.4 Menu Mode:

Press key [Enter] during monitoring mode to enter to Menu Mode.
Main Menu is password protected. Default password is 4321.

```
MENU
 > 1. ENTER MAIN MENU
   2. RESET OVERRIDE
   3. RESET PASSWORD
```

- Menu "Enter Main Menu"
  - Once the password is accepted, you will enter to main menu tree
- Menu "Reset Override"
  - To quick reset all overridden outputs in this QRP
- Menu "Reset Password"
  - If you forgot the main menu password, you could reset the menu password to default password "4321" by entering a correct active code. For the active code, contact QEL.

5.5 Override Mode:

The onboard Relay1 to Relay4, buzzer, strobe and horn can be overridden through the keypad in order to manually actuate relays to switch fans or strobe lights on.

Once the output is overridden, it can last up to 720 minutes and then back to normal. During overridden mode, the output will always be actuated, it will not be hushed or controlled anymore by the M-Controller. It can only be reset by performing [Reset Override] in the menu, or turn off the override mode in the [Menu] -> [Override] or after the time-out.

5.6 Menu Mode: Menu Tree

Main Menu is password protected. Press key [Enter] to enter Menu mode. You will then be prompted for a four-digit password. Once the password is accepted, you are allowed into the main menu tree. Press button [Up] or [Down] to scroll through the main branch headings, press button [Enter] to enter the function, press button [Exit/Hush] to exit to up level menu.

Factory default password is 4321.

5.7 Menu "1_System Setting"

The Menu system setup contains general settings for monitor operations, communications.

Settings	Description
Address:	This is a base address used in lager monitoring network, such as in M-Controller system. Available address for M-Controller system is between 0 and 11. **Default is 3**
Backlight:	Can be set to "Always ON", "Always OFF", "AUTO" In Auto mode, the backlight will turn on for 30 seconds after any key has been pressed **Default setting is AUTO mode**
Change Password:	The new password can be any combination of up to four digits **Default password is 4321**

5.8 Menu "2_Relay Style"

Relay1 to Relay4 can be set to Normal Style Relay or Buzzer Style Relay.

Settings	Description
Normal Style Relay:	Work as normal relay
Buzzer Style Relay:	When the relay is used to control a buzzer or horn. Working as a buzzer style will make the relay have the same function as the buzzer. It will be switched off when performing the Hush function

5.9 Menu "3_Override"

Relay1 to Relay4, Buzzer/Strobe/Horn can be manually and individually set to Override Mode.

See "Override Mode"

WARRANTY STATEMENT

The information contained in this manual is based upon data considered accurate; however, no warranty is expressed or implied regarding the accuracy of this data. All QEL equipment is warranted against defects in material and workmanship for a period of two years from date of shipment with the following exceptions:

Electrochemical Sensors (Toxic)	Six Months
Catalytic Sensors (Combustible)	One Year

During the warranty period we will repair or replace, at our discretion, any components or complete units that prove, in our opinion, to be defective. We are not liable for consequential or incidental damage to auxiliary interfaced equipment.

A returned material authorization number should be obtained from the factory prior to returning any goods. All return shipments must be shipped freight prepaid and a copy of the maintenance records should accompany the unit concerned.

Warranty should be considered F.O.B. the factory. Labour and travel time are chargeable for any field site visits required for warranty work.

LIMITED LIABILITY

All QEL systems shall be installed by a qualified technician/electrician and maintained in strict accordance with data provided for individual systems in the form of installation/maintenance manuals. QEL assumes no responsibility for improper installation, maintenance, etc., and stresses the importance of reading all manuals. QEL shall not be responsible for any liability arising from auxiliary interfaced equipment nor any damage resulting from the installation or operation of this equipment.

QEL's total liability is contained as above with no other liability expressed or implied as the purchaser is entirely responsible for installation and maintenance of systems.

This warranty is in lieu of all other warranties, expressed or implied, and no representative or person is authorized to represent or assume for QEL any liability in connection with the sales of our products other than that set forth herein.

NOTE: Due to on-going product development, QEL reserves the right to change specifications without notice and will assume no responsibility for any costs as a result of modifications.

For further information or assistance, contact:

QUATROSENSE ENVIRONMENTAL LTD.
5935 Ottawa Street, PO Box 749
Richmond, Ontario
K0A 2Z0
Tel: (613) 838-4005
Fax: (613) 838-4018
Email: QEL@QELsafety.com
Web: www.QELsafety.com