CUI Devices is now Same Sky! Learn More

MODEL: HSC-02 | DESCRIPTION: HEAT SINK CLIP

FEATURES

- for use with HSE-BX-035H series
- stainless steel
- clean finish



RoHS

MECHANICAL DRAWING

units: mm

MATERIAL	SUS 301
FINISH	clean
THICKNESS	0.4 mm



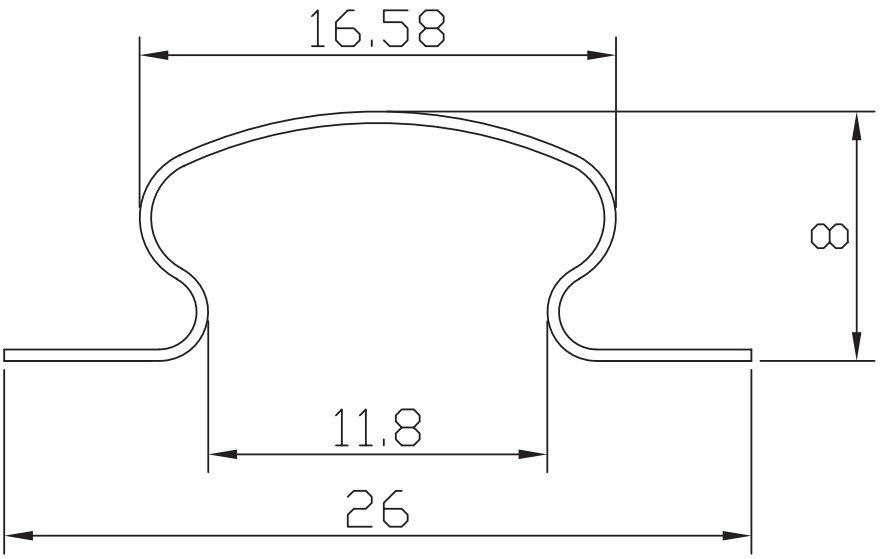

REVISION HISTORY

rev.	description	date
1.0	initial release	09/21/2020
1.01	logo, datasheet style update	08/05/2022
1.02	CUI Devices rebranded to Same Sky	09/12/2024

The revision history provided is for informational purposes only and is believed to be accurate.

same sky

Same Sky offers a one (1) year limited warranty. Complete warranty information is listed on our website.

Same Sky reserves the right to make changes to the product at any time without notice. Information provided by Same Sky is believed to be accurate and reliable. However, no responsibility is assumed by Same Sky for its use, nor for any infringements of patents or other rights of third parties which may result from its use.

Same Sky products are not authorized or warranted for use as critical components in equipment that requires an extremely high level of reliability. A critical component is any component of a life support device or system whose failure to perform can be reasonably expected to cause the failure of the life support device or system, or to affect its safety or effectiveness.

sameskydevices.com