same sky

Product Change Notice (PCN)

Date: 05/29/2026

PCN Number: PCN-0381147R-01

To Our Customers:
We appreciate your use of our products. Our commitment in maintaining and improving processes is demonstrated by plans to enhance our product quality, reliability, and manufacturability. The purpose of this notice is to inform you of a product change.

Product(s) Affected: *CLS0281MAE-L152*

Reason(s) for Change: *Factory location change.*

Description of Change: *Operating temperature extended to -20° ~ +70° & minor alterations to the magnet size and external frame length, see below diagram for measurement changes.*

Affected Date Code: *All goods manufactured after 260820*

Product Availability: *All goods with date codes beginning with "F" are the updated design.*

Additional Information: *Picture, diagrams, etc. if deemed necessary*

Before	*After*
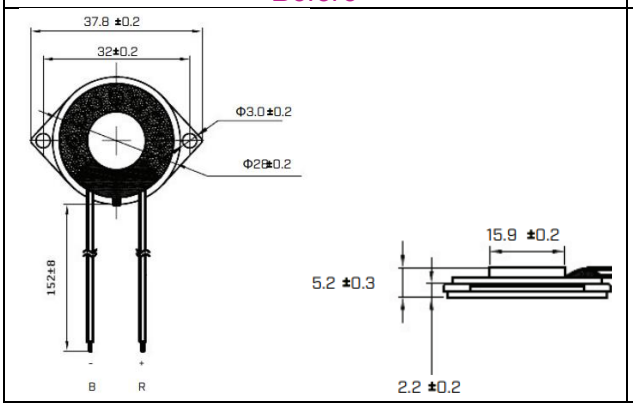	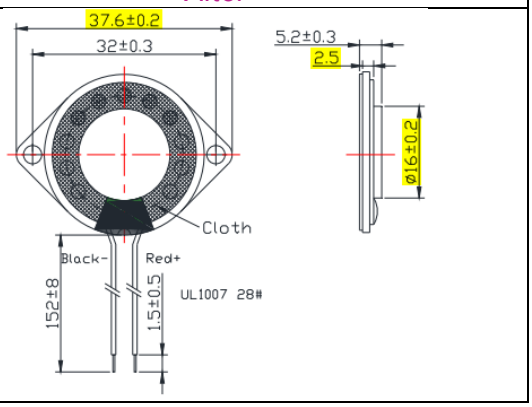

PCN Approval:

Operations/Quality

Product Management

F-723-001 Revision: A