MIKROELEKTRONIKA D.O.O, Batajnički drum 23, 11000 Belgrade, Serbia
VAT: SR105917343 Registration No. 20490918
Phone: + 381 11 78 57 600 Fax: + 381 11 63 09 644 E-mail: office@mikroe.com
www.mikroe.com

Smart IMU Click

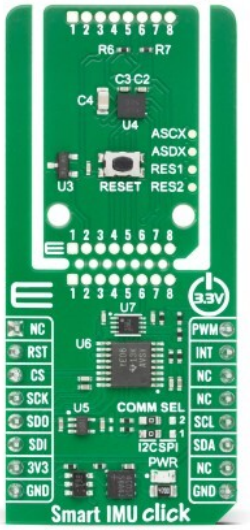

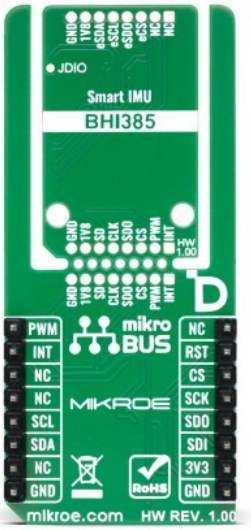

PID: MIKROE-6932

Smart IMU Click is a compact add-on board designed for advanced high-g motion sensing, on-device AI processing, and low-power sensor fusion in always-on embedded applications. This board is based on the BHI385, a high-g IMU with on-device AI and sensor fusion from Bosch Sensortec. Key features include a 6-axis IMU with a 16-bit 3-axis accelerometer supporting up to 28g full-scale range, a 16-bit 3-axis gyroscope, a programmable 32-bit Fuser2 microcontroller, an additional ultra-low-power MCU, pre-installed sensor processing algorithms, and host communication configurable as SPI or I2C. The board also supports Click Snap functionality, secondary sensor interfaces, interrupt and reset control, and an onboard EEPROM memory. Smart IMU Click is suitable for activity and sports tracking, smartwatches, hearables, smart glasses, smartphones, tablets, sensor hubs, and 24/7 low-power motion-aware applications.

For more information about **Smart IMU Click** visit the official product page.

How does it work?

Smart IMU Click is based on the BHI385, a high-g IMU with on-device AI and sensor fusion from Bosch Sensortec. The BHI385 is a highly integrated, ultra-low-power, programmable smart sensor system that combines a best-in-class 6-axis IMU, consisting of a 16-bit 3-axis accelerometer with an extended full-scale range of up to 28g and a 16-bit 3-axis gyroscope, with a programmable 32-bit Fuser2 microcontroller, an additional ultra-low-power MCU, a powerful software framework, SDK support, and pre-installed sensor data processing algorithms. By processing motion data directly on the chip, the BHI385 can perform sensor fusion, activity-related processing, and intelligent motion analysis without continuously loading the main host MCU, making Smart IMU Click suitable for power-sensitive systems that require

Mikroe produces entire development toolchains for all major microcontroller architectures.
Committed to excellency, we are dedicated to helping engineers bring the project development up to speed and achieve outstanding results.
ISO 27001: 2013 certification of informational security management system.
ISO 14001: 2015 certification of environmental management system.
OHSAS 18001: 2008 certification of occupational health and safety management system.
ISO 9001: 2015 certification of quality management system (QMS).

MIKROELEKTRONIKA D.O.O, Batajnički drum 23, 11000 Belgrade, Serbia
VAT: SR105917343 Registration No. 20490918
Phone: + 381 11 78 57 600 Fax: + 381 11 63 09 644 E-mail: office@mikroe.com
www.mikroe.com

continuous or event-driven motion awareness.

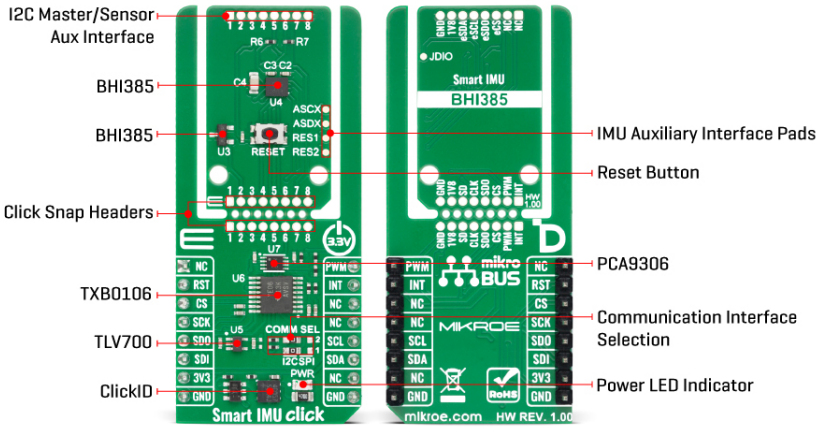

This Click board™ is designed in a unique format supporting the newly introduced MIKROE feature called "Click Snap." Unlike the standardized version of Click boards, this feature allows the main sensor/IC/module area to become movable by breaking the PCB, opening many new possibilities for implementation. Thanks to the Snap feature, the BHI385 can operate autonomously by accessing its signals directly on the pins marked 1-8. Additionally, the Snap part includes a specified and fixed screw hole position, enabling users to secure the Snap board in their desired location.

Its combination of high-g sensing, on-device AI capability, and ultra-low-power operation makes it particularly useful for activity and sports tracking, smartwatches, hearables, smart glasses, smartphones, tablets, mobile communication devices, and other applications requiring 24/7 sensor data processing. Smart IMU Click allows the host interface to be configured as either SPI or I2C through the onboard COMM SEL jumpers, supporting SPI operation up to 50MHz and I2C communication up to 3.4MHz.

In addition to the host interface, the BHI385 provides two secondary master interfaces, including one I2C interface and one selectable SPI or I2C interface, enabling flexible sensor hub expansion and connection to additional external sensors. The board also uses an RTS pin together with a RESET button for chip reset control, an INT pin for interrupt signaling, and a PWM pin connected to the onboard AT21CS01 EEPROM memory.

This Click board™ can be operated only with a 3.3V logic voltage level. Since the BHI385 operates and communicates at 1.8V logic levels (via TLV70018), logic-level translators, the TXB0106 and PCA9306, are used to ensure proper operation and accurate signal-level translation. In this way, both 3.3V and 5V MCUs can use the communication lines correctly. This Click board™ also comes equipped with a library containing easy-to-use functions and example code that can be used as a reference for further development.

Click Snap

Click Snap is an innovative feature of our standardized Click add-on boards, designed to bring greater flexibility and optimize your prototypes. By simply snapping the PCB along predefined lines, you can easily detach the main sensor/IC/module area, reducing the overall size, weight, and power consumption - ideal for the final phase of prototyping. For more details about Click Snap, visit the official page dedicated to this feature.

Mikroe produces entire development toolchains for all major microcontroller architectures.
Committed to excellency, we are dedicated to helping engineers bring the project development up to speed and achieve outstanding results.

ISO 27001: 2013 certification of informational security management system.
ISO 14001: 2015 certification of environmental management system.
OHSAS 18001: 2008 certification of occupational health and safety management system.

ISO 9001: 2015 certification of quality management system (QMS).

MIKROELEKTRONIKA D.O.O, Batajnički drum 23, 11000 Belgrade, Serbia
VAT: SR105917343 Registration No. 20490918
Phone: + 381 11 78 57 600 Fax: + 381 11 63 09 644 E-mail: office@mikroe.com
www.mikroe.com

Specifications

Type	Motion
Applications	Ideal for activity and sports tracking, smartwatches, hearables, smart glasses, smartphones, tablets, sensor hubs, and 24/7 low-power motion-aware applications
On-board modules	BHI385 - high-g IMU with on-device AI and sensor fusion from Bosch Sensortec
Key Features	High-g motion sensing, on-device AI processing, low-power sensor fusion, integrated 6-axis IMU, programmable 32-bit Fuser2 microcontroller, pre-installed sensor data processing algorithms, SPI or I2C host interface selection, Click Snap support, onboard AT21CS01 EEPROM memory, and more
Interface	I2C,SPI
Feature	Click Snap,ClickID
Compatibility	mikroBUS™
Click board size	L (57.15 x 25.4 mm)
Input Voltage	1.8V,3.3V

Pinout diagram

This table shows how the pinout on Smart IMU Click corresponds to the pinout on the mikroBUS™ socket (the latter shown in the two middle columns).

Notes	Pin	mikroBUS				Pin	Notes
	NC	1	AN	PWM	16	**PWM**	EEPROM Control
Reset / ID SEL	**RST**	2	RST	INT	15	**INT**	Interrupt
SPI Select / ID COMM	**CS**	3	CS	RX	14	NC	
SPI Clock	**SCK**	4	SCK	TX	13	NC	
SPI Data OUT	**SDO**	5	MISO	SCL	12	**SCL**	I2C Clock
SPI Data IN	**SDI**	6	MOSI	SDA	11	**SDA**	I2C Data
Power Supply	**3.3V**	7	3.3V	5V	10	NC	
Ground	**GND**	8	GND	GND	9	**GND**	Ground

Onboard settings and indicators

Label	Name	Default	Description
LD1	PWR	-	Power LED Indicator
JP1-JP2	COMM SEL	Left	Communication Interface Selection I2C/SPI: Left position I2C, Right position SPI
T1	RESET	-	Reset Button

Mikroe produces entire development toolchains for all major microcontroller architectures.
Committed to excellency, we are dedicated to helping engineers bring the project development up to speed and achieve outstanding results.

ISO 27001: 2013 certification of informational security management system.
ISO 14001: 2015 certification of environmental management system.
OHSAS 18001: 2008 certification of occupational health and safety management system.

ISO 9001: 2015 certification of quality management system (QMS).

MIKROELEKTRONIKA D.O.O, Batajnički drum 23, 11000 Belgrade, Serbia
VAT: SR105917343 Registration No. 20490918
Phone: + 381 11 78 57 600 Fax: + 381 11 63 09 644 E-mail: office@mikroe.com
www.mikroe.com

Smart IMU Click electrical specifications

Description	Min	Typ	Max	Unit
Supply Voltage	-	3.3	-	V
Accelerometer Full-Scale Range	±4	-	±28	g
Gyroscope Full-Scale Range	±125	-	±2000	°/s
Resolution	-	16	-	bit

Software Support

Smart IMU Click demo application is developed using the NECTO Studio, ensuring compatibility with mikroSDK's open-source libraries and tools. Designed for plug-and-play implementation and testing, the demo is fully compatible with all development, starter, and mikromedia boards featuring a mikroBUS™ socket.

Example Description

This example demonstrates the use of the Smart IMU Click board by uploading the BHI385 BSX-SAM firmware, enabling corrected accelerometer and gyroscope virtual sensors at 10 Hz, and continuously reading and logging 6-axis IMU data over UART.

Key Functions

- smartimu_cfg_setup This function initializes Click configuration structure to initial values.
- smartimu_init This function initializes all necessary pins and peripherals used for this Click board.
- smartimu_default_cfg This function executes a default configuration of Smart IMU Click board.
- smartimu_send_command This function builds and sends a command packet to the BHI385 via DMA channel 0 (register 0x00).
- smartimu_upload_firmware This function uploads a firmware binary image to the BHI385 program RAM using the bootloader upload protocol.
- smartimu_configure_vir_sensor This function configures a virtual sensor on the BHI385 by sending a configure sensor command (0x000D).

Application Init

Initializes the driver and performs the Click default configuration.

Application Task

Polls the host interrupt pin. When asserted, reads the interrupt status register to determine which FIFO channels have pending data. Wake-Up and Status FIFOs are drained and discarded; the Non-Wake-Up FIFO is parsed for accelerometer and gyroscope samples. When a valid sample is found, the results are displayed on the USB UART.

Application Output

This Click board can be interfaced and monitored in two ways:

- Application Output - Use the "Application Output" window in Debug mode for real-time

Mikroe produces entire development toolchains for all major microcontroller architectures.
Committed to excellency, we are dedicated to helping engineers bring the project development up to speed and achieve outstanding results.
ISO 27001: 2013 certification of informational security management system.
ISO 14001: 2015 certification of environmental management system.
OHSAS 18001: 2008 certification of occupational health and safety management system.
ISO 9001: 2015 certification of quality management system (QMS).

MIKROELEKTRONIKA D.O.O, Batajnički drum 23, 11000 Belgrade, Serbia
VAT: SR105917343 Registration No. 20490918
Phone: + 381 11 78 57 600 Fax: + 381 11 63 09 644 E-mail: office@mikroe.com
www.mikroe.com

data monitoring. Set it up properly by following this tutorial.
- UART Terminal - Monitor data via the UART Terminal using a USB to UART converter. For detailed instructions, check out this tutorial.

Additional Notes and Information

The complete application code and a ready-to-use project are available through the NECTO Studio Package Manager for direct installation in the NECTO Studio. The application code can also be found on the MIKROE GitHub account.

Resources

mikroBUS™

mikroSDK

Click board™ Catalog

Click boards™

ClickID

Downloads

Smart IMU click example package

Smart IMU click 2D and 3D files v100

Smart IMU click schematic v100

BHI385 datasheet

Mikroe produces entire development toolchains for all major microcontroller architectures.
Committed to excellency, we are dedicated to helping engineers bring the project development up to speed and achieve outstanding results.

ISOQAR REGISTERED
UKAS MANAGEMENT SYSTEMS
ISO 27001: 2013 certification of informational security management system.
ISO 14001: 2015 certification of environmental management system.
OHSAS 18001: 2008 certification of occupational health and safety management system.

TÜV SÜD ISO 9001
ISO 9001: 2015 certification of quality management system (QMS).