Crystal Units
Surface Mount Type CX3225CA

3.2 × 2.5mm for Automotive

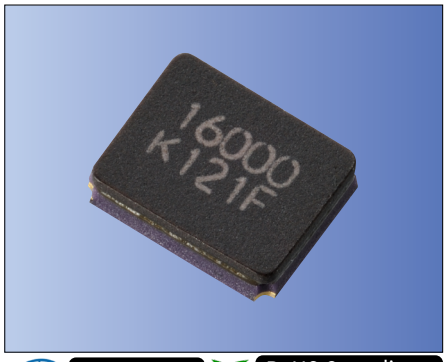

AEC-Q200 RoHS Compliant
PSL: R4Y MSL1

Features

- Crystal unit for automotive electronics
- Miniature and low profile (3.2 × 2.5 × 0.8mm)
- Ceramic package
- Reflow compatible

Applications

- Automotive (ECU, High-Speed Automotive Network)

How to Order

CX3225CA 16000 D0 G S S HH
① ② ③④ ⑤ ⑥ ⑦ ⑧

Packaging
(Tape & Reel 3000 pcs./ reel)

①Series (Type and Size)
②Frequency (12,000 to 54,000kHz)
③④Load Capacitance (Unit:pF) Ex.: D1:8.1pF

③Integer part	
D	8
E	9
F	10
G	11
H	12
Z	Special suffix

④After the decimal point	
0	.0
1	.1
2	.2
3	.3
4	.4
5	.5
6	.6
7	.7
8	.8
9	.9

⑤Frequency Tolerance

G	$\pm 15\times10^{-6}$
H	$\pm 20\times10^{-6}$
J	$\pm 25\times10^{-6}$
K	$\pm 30\times10^{-6}$
M	$\pm 40\times10^{-6}$
P	$\pm 50\times10^{-6}$
W	All Over
Z	Special suffix

⑥Operating Temp. Range ⑦Frequency Temp. Stability

⑥ \ ⑦		Q	R	S	T	V	W
		±30ppm	±40ppm	±50ppm	±100ppm	±150ppm	±200ppm
L	-30 to 85°C	✓	✓	✓	✓	✓	✓
P	-40 to 85°C	✓	✓	✓	✓	✓	✓
R	-40 to 105°C		✓	✓	✓	✓	✓
S	-40 to 125°C			✓	✓	✓	✓
T	-40 to 150°C				✓	✓	✓

⑧Individual Specification (STD Specification is "HH" .)

Specifications

Item	Symbol	Specification	Units	Remarks
Frequency Range	f_{nom}	12000 to 54000	kHz	Please contact us for other frequency range.
Overtone Order	OT	Fundamental	—	
Load Capacitance	CL	8	pF	Please contact us for other CL requirements.
Frequency Tolerance	f_{tol}	± 20	$\times 10^{-6}$	25° C ± 3° C
Motional Series Resistance	R1	Table 1	ohm	
Drive Level	DL	10 μ W(200 μ W max.)	μ W	
Operating Temp. Range	T_{use}	− 40 to +125	° C	
Storage Temp. Range	T_{stg}	− 40 to +150	° C	
Frequency Temp. Characteristics	f_{tem}	± 50	$\times 10^{-6}$	Freq. deviation from the value at 25° C
Shunt capacitance	C0	3.0max.	pF	

Please contact us for other specifications.

◆Table 1
Motional Series Resistance ESR (C1)

Frequency (MHz)	ESR (Ohm)
12≦F<20	120
20≦F≦54	100

Dimensions

(Unit: mm)

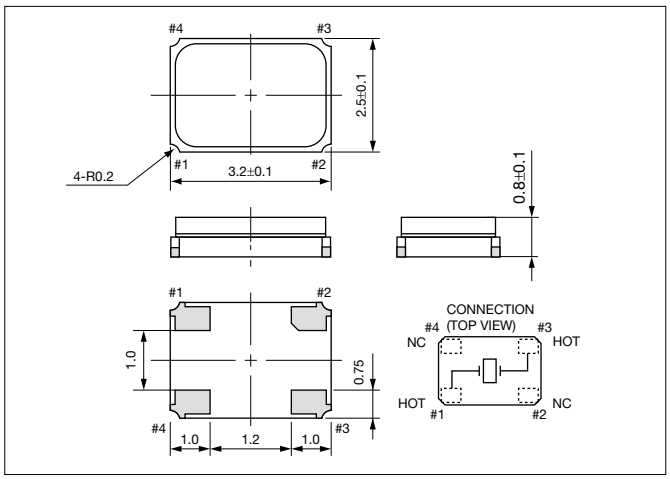

Recommended Land Pattern
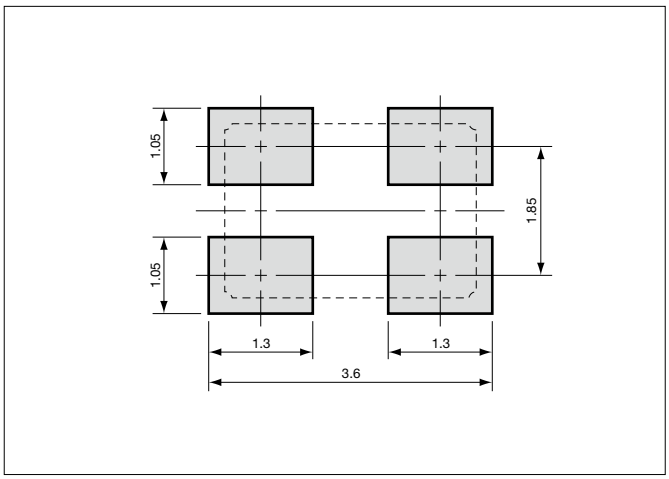
(Unit: mm)