BOURNS®

MOV-20DxxxKC Series

Metal Oxide Varistors

*RoHS COMPLIANT

Features

- High voltage and current rating
- Straight and kinked lead styles available
- Bidirectional
- Surge protection
- Fast response time
- RoHS compliant*
- Agency listing: c UL us

Applications

- Power supplies
- Power systems
- Line voltage
- Telecom systems
- White goods / appliances

Sustainability

- Eco-logistics-friendly packing
- Corrosion-resistant for longevity
- ISO 14001, low-impact energy
- Responsibly sourced and produced

Product Overview

The 20 mm radial leaded varistor MOV-20DxxxK Series protects against overvoltage transients such as lightning, power contact and power induction. The metal oxide varistors offer a choice of varistor voltages from 200 V to 1800 V and Vrms voltages from 130 V to 1100 V.

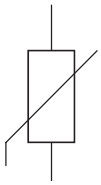

The devices have a high current handling, high energy absorption capability and fast response times to protect against transient faults up to rated limits.

Contact Information

www.bourns.com	Phone	Email
Asia-Pacific	+886-2 2562-4117	asiacus@bourns.com
Europe	+36 88 885 877	eurocus@bourns.com
Mexico	+52 614 478 0400	mexicus@bourns.com
The Americas	+1-951 781-5500	americus@bourns.com

Industry Standard Compliance

Standard	UL 1449
File Number	E313168

Absolute Maximum Ratings (@ T_A = 25 °C Unless Otherwise Noted)

Parameter	Symbol	Min.	Typ.	Max.	Unit
Operating Temperature	T_{OPR}	-40	25	+105	°C
Storage Temperature	T_{STG}	-40	25	+125	°C
Rated Wattage	P_w			1.00	Watt
Varistor Voltage Temperature Coefficient	V_{TC}	0		0.05	% / °C
Response Time	T_r		10	25	ns
Varistor Voltage Tolerance	V_{tol}	-10	0	10	%

Electrical Characteristics (@ T_A = 25 °C Unless Otherwise Noted)

Bourns Part No.	Max. Continuous Voltage (V)		Voltage @ 1 mA DC (V)			Voltage @ Class Current (8/20 µs)		Max. Peak Current (8/20 µs)	Max. Energy (J)	Typ. Cap. (pF)
	r.m.s.	d.c.	Min.	Nom.	Max.	Class Current (A)	Max. Clamping Voltage (V)	One Time	8/20 µs	1 kHz
MOV-20D201KC	130	170	185	200	225	100	340	6500	95.0	2400
MOV-20D221KC	140	180	198	220	242	100	360	6500	100.0	2160
MOV-20D241KC	150	200	216	240	264	100	395	6500	108.0	1980
MOV-20D271KC	175	225	243	270	297	100	455	6500	127.0	1800
MOV-20D301KC	190	250	270	300	330	100	500	6500	136.0	1560
MOV-20D331KC	210	275	297	330	363	100	550	6500	150.0	1440
MOV-20D361KC	230	300	324	360	396	100	595	6500	163.0	1320
MOV-20D391KC	250	320	351	390	429	100	650	6500	180.0	1200
MOV-20D431KC	275	350	387	430	473	100	710	6500	190.0	1116
MOV-20D471KC	300	385	423	470	517	100	775	6500	220.0	1020
MOV-20D511KC	320	415	459	510	561	100	845	6500	220.0	936
MOV-20D561KC	350	460	504	560	616	100	925	6500	220.0	852
MOV-20D621KC	385	505	558	620	682	100	1025	6500	220.0	780
MOV-20D681KC	420	560	612	680	748	100	1120	6500	220.0	720
MOV-20D751KC	460	615	675	750	825	100	1240	6500	230.0	636
MOV-20D781KC	485	640	702	780	858	100	1290	6500	255.0	612
MOV-20D821KC	510	670	738	820	902	100	1355	6500	265.0	600
MOV-20D911KC	550	745	819	910	1001	100	1500	6500	282.0	528
MOV-20D102KC	625	825	900	1000	1100	100	1650	6500	310.0	480
MOV-20D112KC	680	895	990	1100	1210	100	1815	6500	342.0	432
MOV-20D152KC	940	1200	1350	1500	1650	100	2475	6500	383.0	384
MOV-20D182KC	1100	1465	1620	1800	1980	100	2970	6500	625.0	312

* RoHS Directive 2015/863, Mar 31, 2015 and Annex.
Specifications are subject to change without notice.
Users should verify actual device performance in their specific applications.

The products described herein and this document are subject to specific legal disclaimers as set forth on the last page of this document, and at www.bourns.com/docs/legal/disclaimer.pdf.

MOV-20DxxxKC Series

Metal Oxide Varistors

*RoHS COMPLIANT

Product Dimensions

This is an RoHS compliant molded radial package with 100 % Sn plating on the terminations.

Straight Leads

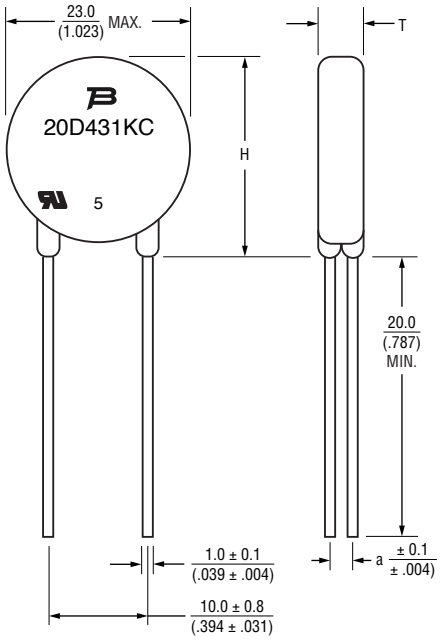

Bourns Part Number	Dim T (Max.)	Dim. H (Max.)	Dim a (Typ.)
MOV-20D201KC	4.2 (.165)	26.0 (1.024)	2.2 (.087)
MOV-20D221KC	4.3 (.169)		2.3 (.091)
MOV-20D241KC	4.4 (.173)		2.4 (.094)
MOV-20D271KC	4.6 (.181)		2.5 (.098)
MOV-20D301KC	4.8 (.189)		2.7 (.106)
MOV-20D331KC	5.0 (.197)		2.8 (.110)
MOV-20D361KC	5.2 (.205)		2.9 (.114)
MOV-20D391KC	5.4 (.213)		3.1 (.122)
MOV-20D431KC	5.6 (.220)		3.3 (.130)
MOV-20D471KC	5.9 (.232)		3.4 (.134)
MOV-20D511KC	6.0 (.236)		3.7 (.146)
MOV-20D561KC	6.5 (.256)	28.0 (1.102)	3.9 (.154)
MOV-20D621KC	6.9 (.272)		4.1 (.161)
MOV-20D681KC	7.0 (.276)		4.2 (.165)
MOV-20D751KC	7.2 (.283)		4.4 (.173)
MOV-20D781KC	7.4 (.291)		4.4 (.173)
MOV-20D821KC	7.8 (.307)		4.6 (.181)
MOV-20D911KC*	8.2 (.323)		4.6 (.181)
MOV-20D102KC*	8.7 (.343)		4.8 (.189)
MOV-20D112KC*	9.2 (.362)		5.2 (.205)
MOV-20D152KC**	N/A		
MOV-20D182KC**	N/A		

* Not available in Tape & Reel packaging.

**Not available in Straight Lead configuration; see Kinked Leads (In-line) configuration.

Specifications are subject to change without notice.
Users should verify actual device performance in their specific applications.

The products described herein and this document are subject to specific legal disclaimers as set forth on the last page of this document, and at www.bourns.com/docs/legal/disclaimer.pdf.

*RoHS COMPLIANT

Product Dimensions (Continued)

This is an RoHS compliant molded radial package with 100 % Sn plating on the terminations.

Kinked Leads (Outward)

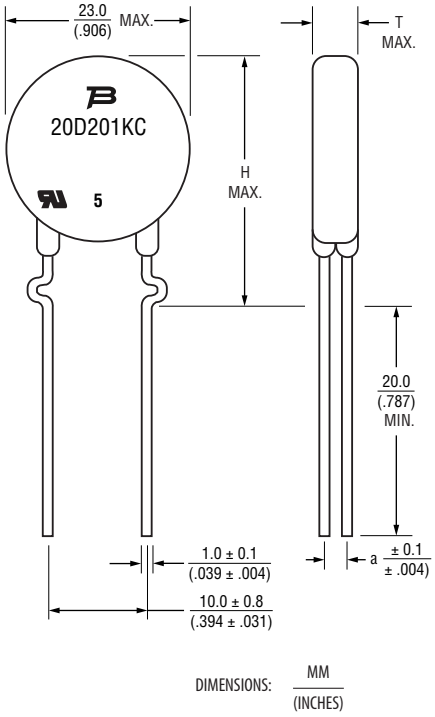

(Kinked Lead Product Dimensions continue on page 4.)

Bourns Part Number	Dim T (Max.)	Dim. H (Max.)	Dim a (Typ.)
MOV-20D201KKC	4.2 (.165)	28.0 (1.102)	2.1 (.083)
MOV-20D221KKC	4.3 (.169)		2.2 (.087)
MOV-20D241KKC	4.4 (.173)		2.3 (.091)
MOV-20D271KKC	4.6 (.181)		2.4 (.094)
MOV-20D301KKC	4.8 (.189)		2.5 (.098)
MOV-20D331KKC	5.0 (.197)		2.8 (.110)
MOV-20D361KKC	5.2 (.205)		2.9 (.114)
MOV-20D391KKC	5.4 (.213)		3.1 (.122)
MOV-20D431KKC	5.6 (.220)		3.3 (.130)
MOV-20D471KKC	5.9 (.232)		3.4 (.134)
MOV-20D511KKC	6.0 (.236)		3.7 (.146)
MOV-20D561KKC	6.5 (.256)	30.0 (1.181)	3.9 (.154)
MOV-20D621KKC	6.9 (.272)		4.1 (.161)
MOV-20D681KKC	7.0 (.276)		4.2 (.165)
MOV-20D751KKC	7.2 (.283)		4.4 (.173)
MOV-20D781KKC	7.4 (.291)		4.4 (.173)
MOV-20D821KKC	N/A See Kinked Leads (In-line) Configuration		
MOV-20D911KKC*			
MOV-20D102KKC*			
MOV-20D112KKC*			
MOV-20D152KKC*			
MOV-20D182KKC*			

* Not available in Tape & Reel packaging.

*RoHS COMPLIANT

Product Dimensions (Continued)

This is an RoHS compliant molded radial package with 100 % Sn plating on the terminations.

Kinked Leads (In-line)

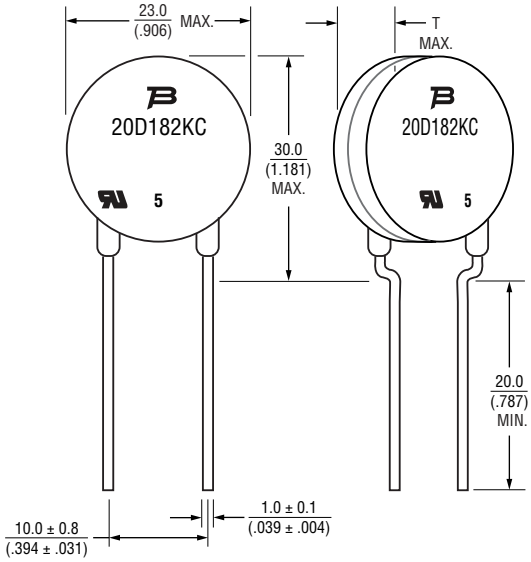

DIMENSIONS: MM / (INCHES)

Bourns Part Number	Dim T (Max.)
MOV-20D201KKC	N/A See Kinked Leads (Outward) Configuration
MOV-20D221KKC	
MOV-20D241KKC	
MOV-20D271KKC	
MOV-20D301KKC	
MOV-20D331KKC	
MOV-20D361KKC	
MOV-20D391KKC	
MOV-20D431KKC	
MOV-20D471KKC	
MOV-20D511KKC	
MOV-20D561KKC	
MOV-20D621KKC	
MOV-20D681KKC	
MOV-20D751KKC	
MOV-20D781KKC	
MOV-20D821KKC	7.8 (.307)
MOV-20D911KKC*	8.2 (.323)
MOV-20D102KKC*	8.7 (.343)
MOV-20D112KKC*	9.2 (.362)
MOV-20D152KKC*	11.4 (.449)
MOV-20D182KKC*	13.0 (.512)

* Not available in Tape & Reel packaging.

BOURNS®

MOV-20DxxxKC Series

Metal Oxide Varistors

*RoHS COMPLIANT

Typical Part Marking

Bourns Part Number	Bourns Part Marking
MOV-20D201KC	20D201KC
MOV-20D221KC	20D221KC
MOV-20D241KC	20D241KC
MOV-20D271KC	20D271KC
MOV-20D301KC	20D301KC
MOV-20D331KC	20D331KC
MOV-20D361KC	20D361KC
MOV-20D391KC	20D391KC
MOV-20D431KC	20D431KC
MOV-20D471KC	20D471KC
MOV-20D511KC	20D511KC
MOV-20D561KC	20D561KC
MOV-20D621KC	20D621KC
MOV-20D681KC	20D681KC
MOV-20D751KC	20D751KC
MOV-20D781KC	20D781KC
MOV-20D821KC	20D821KC
MOV-20D911KC	20D911KC
MOV-20D102KC	20D102KC
MOV-20D112KC	20D112KC
MOV-20D152KC	20D152KC
MOV-20D182KC	20D182KC

NOTE: The "5" marking on MOV products is for traceability of production assembly for quality assurance compliance.

Internal Construction

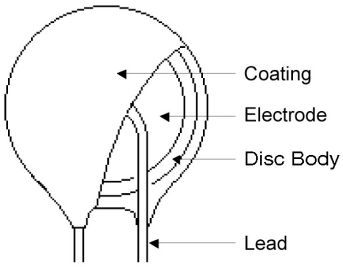

How to Order

MOV - 20D nn (n) K __ C (TR)

Model Designator
- MOV = Metal Oxide Varistor

Disc Diameter
- 20D = 20 mm

Nominal Varistor Voltage
- See Electrical Characteristics Table

Multiplier of Voltage Digits
- 0 = No multiplier
- 1 = nn * 10^1
- 2 = nn * 10^2

Varistor Voltage Tolerance
- K = 10 %

Lead Style
- Blank = Straight Leads
- K = Kinked Leads

Electrode
- C = Copper-based Electrode

Packaging
- Blank = Bulk
- TR = Tape & Reel

Examples:

MOV-20D201KC	*200 V, Straight Leads, Bulk Pack*
MOV-20D331KKCTR	*330 V, Kinked (Outward) Leads, Tape & Reel*
MOV-20D152KKC	*1500 V, Kinked (In-line) Leads, Bulk Pack*

** *Models MOV-20D911KC, 102KC, 112KC, 152KC and 182KC are not available in Tape & Reel packaging.*

Environmental Specifications

Moisture Sensitivity Level 1

ESD Classification (HBM) ..... N/A

*RoHS COMPLIANT

Performance Graphs

V-I Characteristics

MOV-20D201KC to MOV-20D431KC

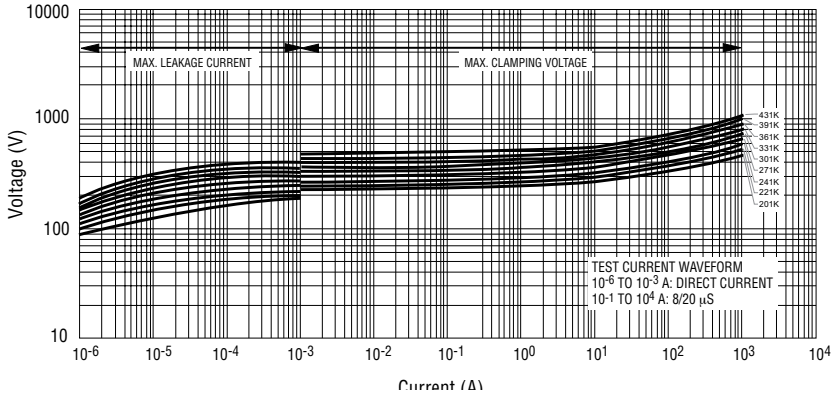

MOV-20D471KC to MOV-20D182KC

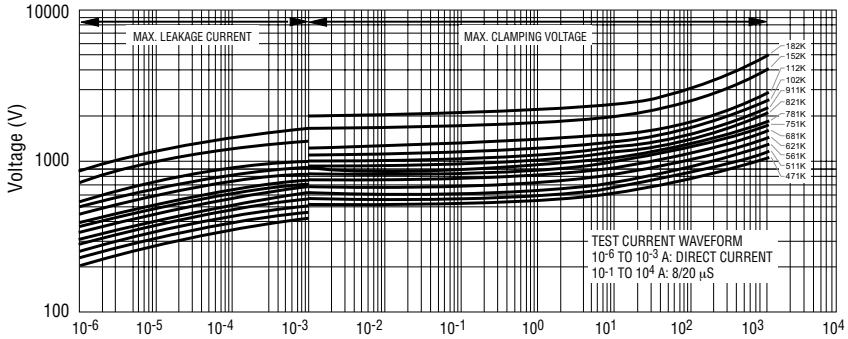

Pulse Rating Curves

20D201KC~751KC

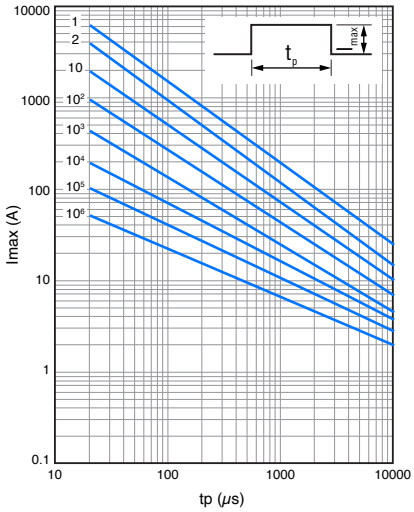

20D781KC~182KC

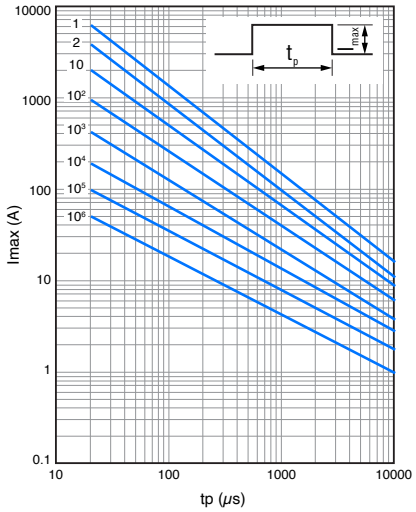

Specifications are subject to change without notice.
Users should verify actual device performance in their specific applications.

The products described herein and this document are subject to specific legal disclaimers as set forth on the last page of this document, and at www.bourns.com/docs/legal/disclaimer.pdf.

*RoHS COMPLIANT

Packaging Specifications

TAPE & REEL - Straight Leads

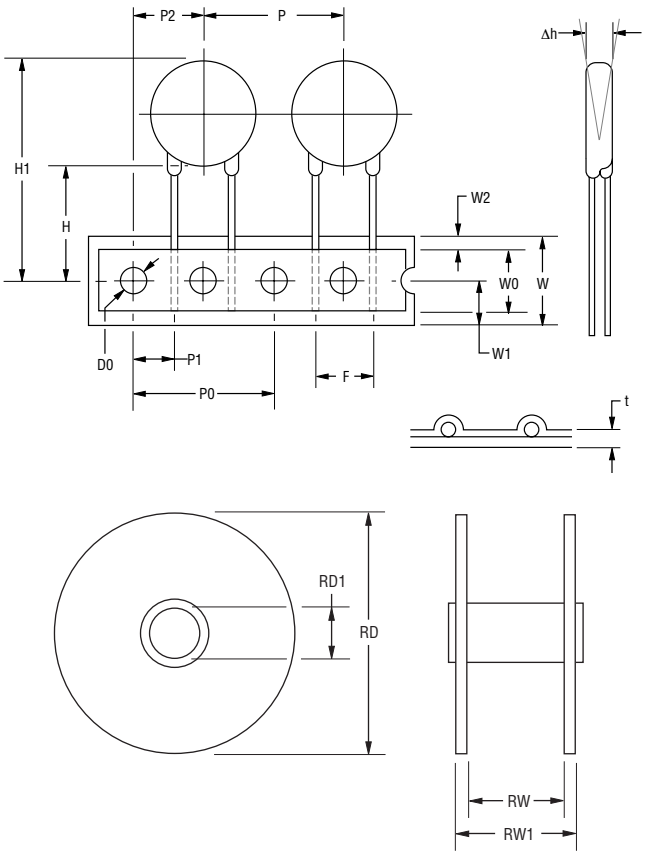

NOTE: Models MOV-20D911KC, 102KC, 112KC, 152KC and 182KC are not available in Tape & Reel packaging.

Item	Symbol	20 mm Disc
Reel Outside Diameter	RD	355 (13.98)
Reel Inner Diameter	RD1	30 (1.181)
Tape Width	RW	55 (2.16)
Reel Width	RW1	63 (2.48) max.
Pitch of Component	P	25.4 ± 1.0 (1.00 ± 0.04)
Feed Hole Pitch	P0	12.7 ± 0.2 (0.50 ± 0.008)
Feed Hole Center to Pitch	P1	7.77 ± 0.7 (0.31 ± 0.03)
Feed Hole Center to Component Center	P2	12.7 ± 0.7 (0.50 ± 0.03)
Lead to Lead Distance	F	10.0 ± 0.8 (0.39 ± 0.03)
Component Alignment	Dh	4.0 (0.16) max.
Tape Width	W	18.0 ± 0.5 (0.71 ± 0.02)
Hole Down Tape Width	W0	12.0 ± 0.8 (0.47 ± 0.03)
Hole Position	W1	9.0 ± 0.5 (0.35 ± 0.02)
Hole Down Tape Position	W2	3.0 (0.12) max.
Height From Center to Component Base	H	19.0 ± 1.0 (0.75 ± 0.04)
Component Height	H1	47.0 (1.85) max.
Feed Hole Diameter	D0	4.0 ± 0.2 (0.16 ± 0.08)
Total Tape Thickness	t	0.6 ± 0.3 (0.02 ± 0.01)
Quantity per Reel	-	250

DIMENSIONS: MM (INCHES)

Specifications are subject to change without notice.
Users should verify actual device performance in their specific applications.

The products described herein and this document are subject to specific legal disclaimers as set forth on the last page of this document, and at www.bourns.com/docs/legal/disclaimer.pdf.

*RoHS COMPLIANT

Packaging Specifications (Continued)

TAPE & REEL - Kinked Leads

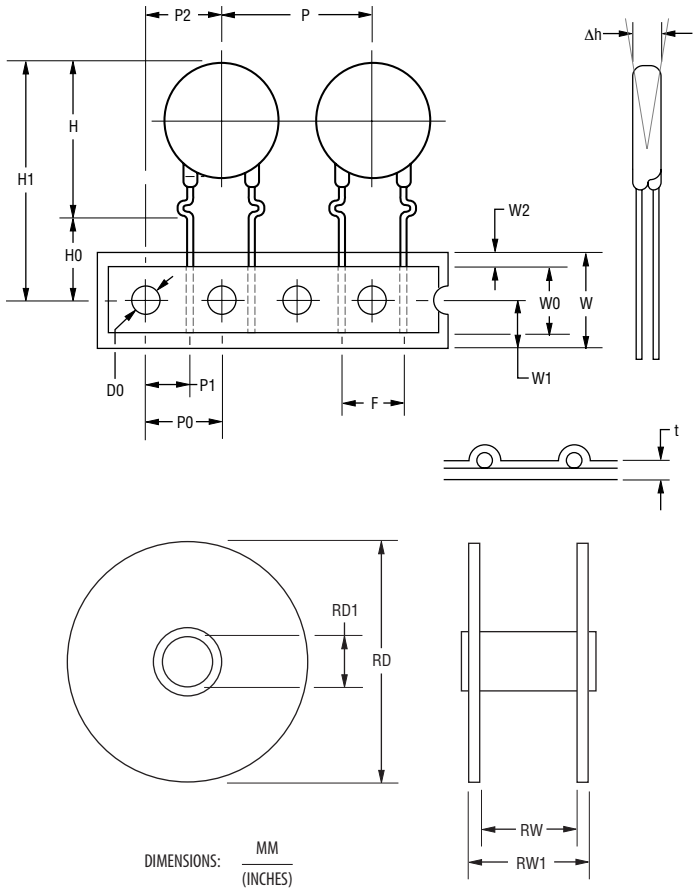

NOTE: Models MOV-20D911KKC, 102KKC, 112KKCC, 152KKC and 182KKC are not available in Tape & Reel packaging.

Item	Symbol	20 mm Disc
Reel Outside Diameter	RD	355 (13.98)
Reel Inner Diameter	RD1	30 (1.181)
Tape Width	RW	55 (2.16)
Reel Width	RW1	63 (2.48) max.
Pitch of Component	P	25.4 ± 1.0 (1.00 ± 0.04)
Feed Hole Pitch	P0	12.7 ± 0.2 (0.50 ± 0.008)
Feed Hole Center to Pitch	P1	7.77 ± 0.7 (0.31 ± 0.03)
Feed Hole Center to Component Center	P2	12.7 ± 0.7 (0.50 ± 0.03)
Lead to Lead Distance	F	10.0 ± 0.8 (0.39 ± 0.03)
Component Alignment	Dh	4.0 (0.16) max.
Tape Width	W	18.0 ± 0.5 (0.71 ± 0.02)
Hole Down Tape Width	W0	12.0 ± 0.8 (0.47 ± 0.03)
Hole Position	W1	9.0 ± 0.5 (0.35 ± 0.02)
Hole Down Tape Position	W2	3.0 (0.12) max.
Height From Component Top to Kinked Base (MOV-20D201KKC~511KKC)	H	28.0 (1.10) max.
Height From Component Top to Kinked Base (MOV-20D561KKC~821KKC)	H	30.0 (1.18) max.
Seating Plane Height	H0	16.0 ± 0.5 (0.63 ± 0.02)
Component Height	H1	47.0 (1.85) max.
Feed Hole Diameter	D0	4.0 ± 0.2 (0.16 ± 0.08)
Total Tape Thickness	t	0.6 ± 0.3 (0.02 ± 0.01)
Quantity per Reel	-	250

BULK

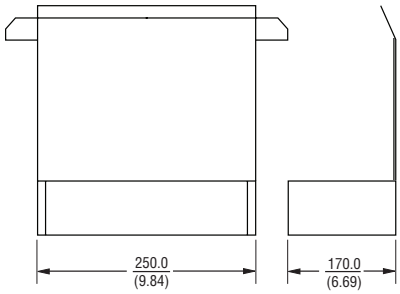

QUANTITY:
MOV-20D201KC - MOV20D301KC = 500 PCS. PER BOX
MOV-20D331KC - MOV20D431KC = 400 PCS. PER BOX
MOV-20D471KC - MOV20D821KC = 300 PCS. PER BOX
MOV-20D911KC - MOV20D182KC = 200 PCS. PER BOX

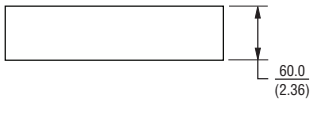

Specifications are subject to change without notice.
Users should verify actual device performance in their specific applications.

The products described herein and this document are subject to specific legal disclaimers as set forth on the last page of this document, and at www.bourns.com/docs/legal/disclaimer.pdf.

Legal Disclaimer Notice

This legal disclaimer applies to purchasers and users of Bourns® products manufactured by or on behalf of Bourns, Inc. and its affiliates (collectively, "Bourns").

Unless otherwise expressly indicated in writing, Bourns® products and data sheets relating thereto are subject to change without notice. Users should check for and obtain the latest relevant information and verify that such information is current and complete before placing orders for Bourns® products.

The characteristics and parameters of a Bourns® product set forth in its data sheet are based on laboratory conditions, and statements regarding the suitability of products for certain "typical" applications are based on Bourns' knowledge of typical requirements in generic applications. Bourns assumes that "typical" applications include failsafe/backup features to address critical risks to users and are designed to allow rework of Bourns® product to avoid scrap of a device solely due to malfunctioning Bourns® product. The characteristics and parameters of a Bourns® product in a user application may vary from the data sheet characteristics and parameters due to (i) the combination of the Bourns® product with other components in the user's application, or (ii) the environment of the user application itself. The characteristics and parameters of a Bourns® product also can and do vary in different applications and actual performance may vary over time. Thus, users should always verify the actual performance of the Bourns® product in their specific devices and applications and make their own independent judgments regarding the suitability of Bourns® product and the amount of additional test margin to design into their device or application to compensate for differences between laboratory and real-world conditions.

Unless Bourns has explicitly designated an individual Bourns® product as meeting the requirements of a particular industry standard (e.g., IATF 16949) or a particular qualification (e.g., UL listed or recognized), Bourns is not responsible for any failure of an individual Bourns® product to meet the requirements of such industry standard or particular qualification even if such industry standard or qualification is a "state of art". Users of Bourns® products are responsible for ensuring compliance with safety-related requirements and standards applicable to their devices or applications.

Bourns® products are not recommended, authorized or intended for use in applications where failure or malfunction may result in personal injury, death, or severe property or environmental damage, such as without limitation nuclear, life-critical medical and certain automotive and aviation applications. Except as set forth in the bullet points below or unless expressly and specifically approved in writing on a case-by-case basis by an authorized Bourns' representative, use of any Bourns® products in such unauthorized high-risk applications is at the user's sole risk.

- Bourns considers implantable/invasive devices and devices/procedures designed as life-supporting or life-sustaining by the U.S. Food and Drug Administration or equivalent organizations outside of the United States as "life-critical" medical applications. Bourns expressly identifies those Bourns® standard products that are suitable for use in typical medical applications that are not life-critical in its publication entitled "Bourns Medical Grade Component Guide."

- Bourns expressly identifies those Bourns® standard products that are suitable for use in typical automotive applications associated with any Automate Safety Integrity Level (ASIL) in its publication entitled "Bourns Automotive Grade Component Guide." Bourns' designation of Bourns® product as compliant with the AEC-Q standard does not by itself mean that Bourns has approved such product for use in an automotive application.

- Bourns expressly identifies Bourns® standard products that are suitable for use in the typical aviation applications/systems requiring System Design Assurance Level (RTCA DO-254 DAL) of C, D or E in its publication entitled "Bourns Civilian Aerospace/Aviation Grade Component Guide." Bourns does not test its products for compliance with United States Federal Aviation Administration standards or any other generally equivalent governmental organization standard applicable to products designed or manufactured for use in aviation applications. Use of Bourns® standard components in aviation applications associated with RTCA DO-254 DAL A or B without proper approval noted above shall be at the user's sole risk.

- Bourns will review and authorize on a case-by-case basis the use of Bourns® standard products which are at least AEC-Q compliant in space-related civil applications (rockets, satellites) with a negotiated cross-waiver and indemnity agreement.

The use and level of testing applicable to Bourns® custom products shall be negotiated on a case-by-case basis by Bourns and the user for which such Bourns® custom products are specially designed. Absent a written agreement between Bourns and the user regarding the use and level of such testing, the above provisions applicable to Bourns® standard products shall also apply to such Bourns® custom products.

Use of Bourns® products or Bourns' technology in military/defense applications must be reviewed with Bourns for compliance with applicable export control laws and embargoes. Users shall not sell, transfer, export or re-export (which includes transfers within a country) any Bourns® products or technology or technical data for use in activities which involve the design, development, production, use or stockpiling of nuclear, chemical or biological weapons or missiles, nor shall they use Bourns® products or technology or technical data in any facility which engages in activities relating to such devices. Further, Bourns® products and Bourns' technology and technical data may not under any circumstance be exported or re-exported to countries subject to international sanctions or embargoes. Bourns® products and technology may not, without prior authorization from Bourns and/or the Government of a country where such product/technology is designed and/or manufactured, be resold, transferred, or re-exported (including within the same country) to any party not eligible to receive commodities, software, and technical data originating in such country.

To the maximum extent permitted by applicable law, Bourns disclaims (i) any and all liability for special, punitive, consequential, incidental or indirect damages or lost revenues or lost profits, and (ii) any and all implied warranties (those not based on parameters specified in Bourns' data sheets and/or specifications), including implied warranties of fitness for particular purpose, non-infringement and merchantability.

For your convenience, copies of this Legal Disclaimer Notice with German, Spanish, Japanese, Traditional Chinese and Simplified Chinese bilingual versions are available at:
Web Page: https://www.bourns.com/legal/disclaimers-terms-and-policies
PDF: https://www.bourns.com/docs/Legal/disclaimer.pdf

K2540 05/26R

CALIFORNIA WARNING: Can expose you to lead, a carcinogen and reproductive toxicant.
See www.P65Warnings.ca.gov