RJ45 Connectors, Modular Couplers and Ethernet Cable Assembly

MP002458 RJ45 Metal C3 shielded panel jack dip lock.

RoHS Compliant

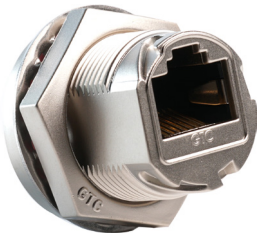

Specifications

IP Rating	: IP68
Recommend Panel Thickness	: 0.8mm to 3mm
Recommend Torque	: 19 to 20Kgf-cm

Diagram

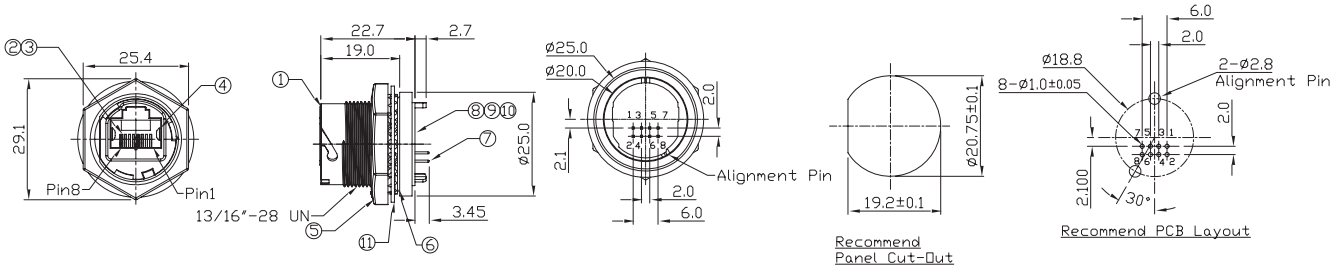

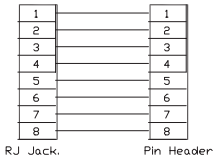

Wiring Diagram

No.	Part Name	Material/Finish	Qty.
1	Housing	Zn Alloy; Finish: Ni Plated	1
2	RJ45 Receptacle	Housing: Thermoplastic; Colour: Grey	
		Contacts: Copper Alloy; Finish: Au Plated, 50μ" thickness	
3	Holder	Thermoplastic; Colour: Black	
4	EMI Shielded Plate	Copper Alloy; Finish: Ni Plated	2
5	Hex Nut	Zn Alloy; Finish: Ni Plated	1
6	O-Ring	Silicone: Colour: Red	
7	Pin Header	Housing: Thermoplastic; Colour: Black	
		Contacts: Copper Alloy; Finish: Au Plated	
8	Holder	Silicone: Colour: Black	
9	PCB	FR-4	
10	Glue	Epoxy; Colour: Black	-
12	Washer	Stainless Steel	1

Dimensions : Millimetres

MP002459 RJ45 Metal C3 shielded panel jack lock with coupler 180°

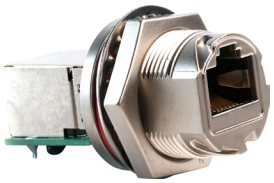

Specifications

IP Rating	: IP68
Recommend Panel Thickness	: 0.8mm to 3mm
Recommend Torque	: 19 to 20Kgf-cm

Diagram

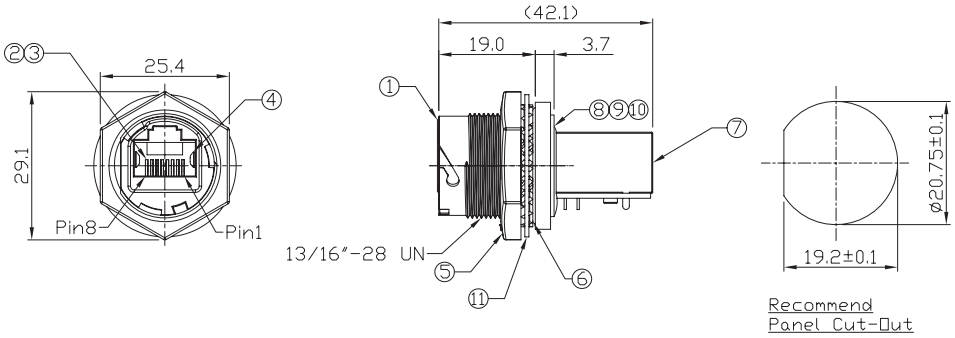

Dimensions : Millimetres

No.	Part Name	Material/Finish	Qty.
1	Housing	Zn Alloy; Finish: Ni Plated	1
2	RJ45 Receptacle	Housing: Thermoplastic; Colour: Grey	
		Contacts: Copper Alloy; Finish: Au Plated, 50μ" thickness	
3	Holder	Thermoplastic; Colour: Black	
4	EMI Shielded Plate	Copper Alloy; Finish: Ni Plated	2
5	Hex Nut	Zn Alloy; Finish: Ni Plated	1
6	O-Ring	Silicone: Colour: Red	
7	RJ45 Receptacle	Shell: Copper Alloy; Finish: Ni Plated	
		Housing: Thermoplastic; Colour: Black	
		Contacts: Copper Alloy; Finish: Au Plated, 50μ" thickness	
8	Holder	Silicone: Colour: Black	
9	PCB	FR-4	
10	Glue	Epoxy; Colour: Black	-
12	Washer	Stainless Steel	1

MP002460 RJ45 Metal C3 Shielded Panel Jack Lock with Coupler 90°

Specifications

IP Rating	: IP68
Recommend Panel Thickness	: 0.8mm to 3mm
Recommend Torque	: 19 to 20Kgf-cm

Diagram

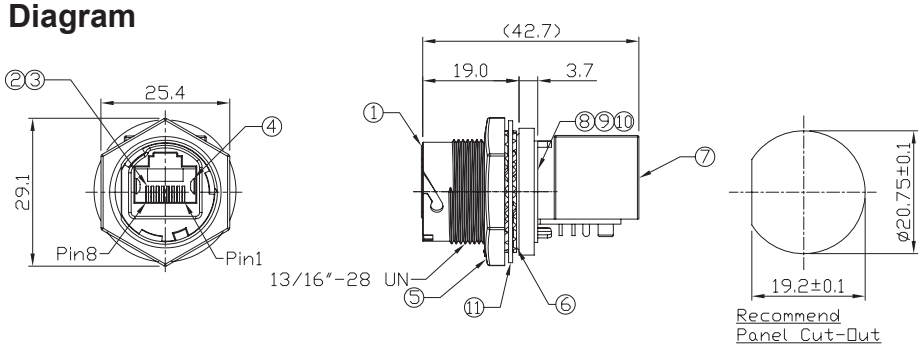

Dimensions : Millimetres

No.	Part Name	Material/Finish	Qty.
1	Housing	Zn Alloy; Finish: Ni Plated	1
2	RJ45 Receptacle	Housing: Thermoplastic; Colour: Grey	
		Contacts: Copper Alloy; Finish: Au Plated, 50μ" thickness	
3	Holder	Thermoplastic; Colour: Black	
4	EMI Shielded Plate	Copper Alloy; Finish: Ni Plated	2
5	Hex Nut	Zn Alloy; Finish: Ni Plated	1
6	O-Ring	Silicone: Colour: Red	
7	RJ45 Receptacle	Shell: Copper Alloy; Finish: Ni Plated	
		Housing: Thermoplastic; Colour: Black	
		Contacts: Copper Alloy; Finish: Au Plated, 50μ" thickness	
8	Holder	Thermoplastic; Colour: Black	
9	PCB	FR-4	
10	Glue	Epoxy; Colour: Black	-
12	Washer	Stainless Steel	1

MP002461 RJ45 Metal C3 Shielded E1 Field Installed Cable End Plug Screw

Specifications

IP Rating	: IP68
Cable Diameter	: 6mm to 8.5mm
Recommend Gland Nut Torque	: 9 to 10Kgf-cm

Diagram

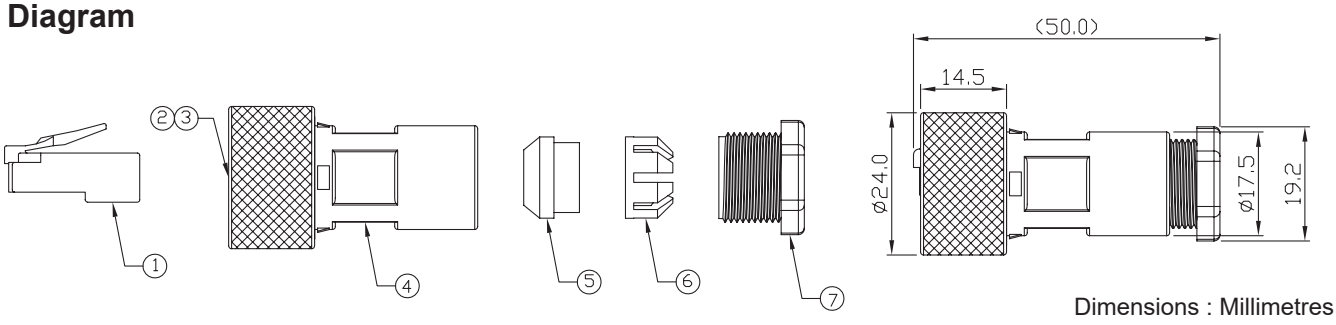

Dimensions : Millimetres

No.	Part Name	Material/Finish	Qty.
1	Housing	Housing: Thermoplastic; Colour: Clear	1
		Contacts: Copper Alloy; Finish: Au Plated, 50μ″ thickness	
		Shell: Cold Roll Steel; Finish: Ni Plated	
2	Rubber Pad	Silicone; Colour: Black	
3	Screw Nut	Copper Alloy; Finish: Ni Plated	
4	Housing	Thermoplastic; Colour: Black	
5	Gland	Silicone; Colour: Green	
6	Cage	Thermoplastic; Colour: White	
7	Gland Nut	Thermoplastic; Colour: Black	

MP002462 RJ45 Full Metal C3 Shielded Field Installed Cable End Screw

Specifications

IP Rating	: IP68
Cable Diameter	: 5mm to 6mm
Recommend Cover Torque	: 6 to 7 Kgf-cm
Recommend Gland Nut Torque	: 9 to 10 Kgf-cm

Diagram

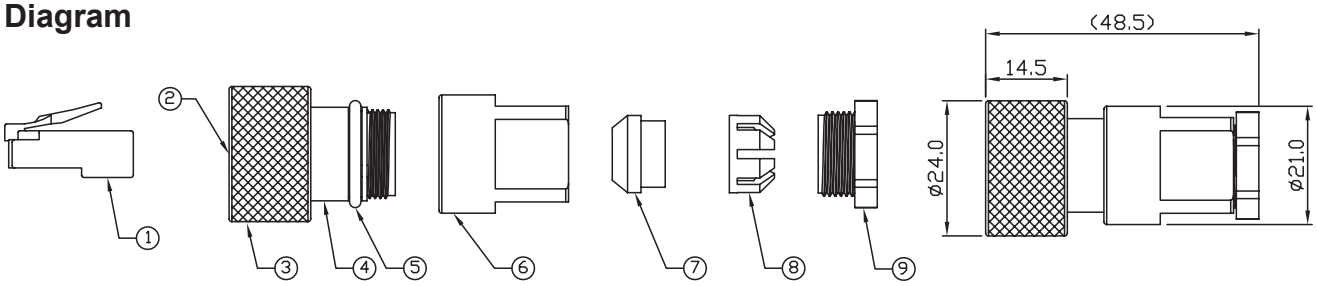

Dimensions : Millimetres

No.	Part Name	Material/Finish	Qty.
1	RJ45	Housing: Thermoplastic; Colour: Clear	1
		Contacts: Copper Alloy; Finish: Au Plated, 50μ″ thickness	
		Shell: SPCC; Finish: Ni Plated	
2	Rubber Pad	Silicone; Colour: Black	
3	Metal Screw Nut	Copper Alloy; Finish: Ni Plated	
4	Housing	Thermoplastic; Colour: Black	
5	O-Ring	Silicone; Colour: Red	
6	Metal Cover	Copper Alloy; Finish: Ni Plated	
7	Gland	Silicone; Colour: Green	
8	Cage	Thermoplastic; Colour: White	
9	Metal Gland Nut	Copper Alloy; Finish: Ni Plated	

MP002457 RJ45 Metal C3 Shielded Panel Jack Lock with Cable and RJ plug

Specifications

IP Rating	: IP68
Recommend Panel Thickness	: 0.8mm to 3mm
Recommend Torque	: 19 to 20Kgf-cm

Diagram

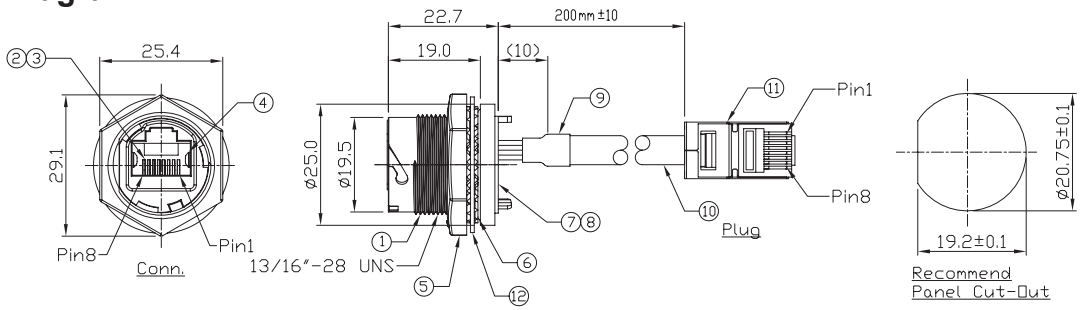

Dimensions : Millimetres

No.	Part Name	Material/Finish	Qty.
1	Housing	Zn Alloy; Finish: Ni Plated	1
2	RJ45 Receptacle	Housing: Thermoplastic; Colour: Grey	
		Contacts: Copper Alloy; Finish: Au Plated, 50μ" thickness	
3	Holder	Thermoplastic; Colour: Black	
4	EMI Shielded Plate	Copper Alloy; Finish: Ni Plated	2
5	Hex Nut	Zn Alloy; Finish: Ni Plated	1
6	O-Ring	Silicone: Colour: Red	
7	PCB	FR-4	2
8	Glue	Epoxy; Colour: Black	-
9	Shrink Tube	L=20mm; Colour: Black	1
10	Cable	Cat5E 24AWG×4p+AL/My+D Colour: Grey, OD=6mm	
11	RJ45 Plug	Shell: Cold Roll Steel; Finish: Ni Plated	
		Contacts: Copper Alloy; Finish: Au Plated, 50μ" thickness	
		Housing Thermoplastic; Colour: Clean	
12	Washer	Stainless Steel	

MP007437 RJ45 C3 Waterproof Cap with Rubber Chain for Metal RJ45 Connectors

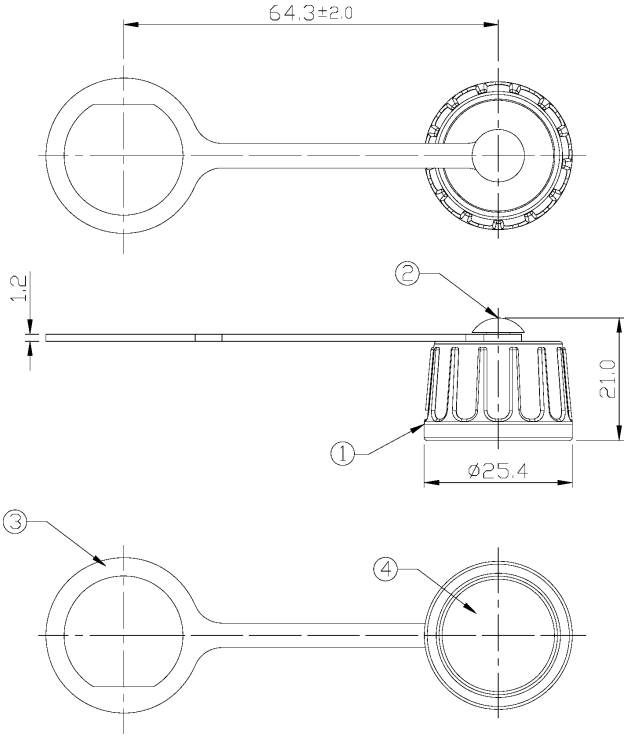

Dimensions : Millimetres

Specifications

IP Rating : IPX7

No.	Part Name	Material/Finish	Qty.
1	Screw Up	Thermal Plastic; Colour: Black	1
2	Rivet	Thermal Plastic; Colour: Black	
3	Rubber Chain	NBR; Colour: Black	
4	Rubber Pad	Silicone; Colour: Black	

Part Number Table

Description	Part Number
RJ45 Ethernet Cable Assembly, RJ45 Plug to RJ45 Receptacle C3 Panel, Grey, 200mm, IP68	MP002457
RJ45 Receptacle Connector, 8P8C, C3 Panel Mount, IP68	MP002458
RJ45 Shielded Modular Coupler, Straight, C3 Panel Mount, IP68	MP002459
RJ45 Shielded Modular Coupler, Right Angle, C3 Panel Mount, IP68	MP002460
RJ45 Shielded Plug Connector, 8P8C, C3 Panel Mount, Metal, IP68	MP002461
RJ45 Shielded Plug Connector, 8P8C, C3 Panel Mount, Metal, IP68	MP002462
RJ45 C3 Waterproof Cap with Rubber Chain for Metal RJ45 Connectors	MP007437

Important Notice : This data sheet and its contents (the "Information") belong to the members of the AVNET group of companies (the "Group") or are licensed to it. No licence is granted for the use of it other than for information purposes in connection with the products to which it relates. No licence of any intellectual property rights is granted. The Information is subject to change without notice and replaces all data sheets previously supplied. The Information supplied is believed to be accurate but the Group assumes no responsibility for its accuracy or completeness, any error in or omission from it or for any use made of it. Users of this data sheet should check for themselves the Information and the suitability of the products for their purpose and not make any assumptions based on information included or omitted. Liability for loss or damage resulting from any reliance on the Information or use of it (including liability resulting from negligence or where the Group was aware of the possibility of such loss or damage arising) is excluded. This will not operate to limit or restrict the Group's liability for death or personal injury resulting from its negligence. Multicomp Pro is the registered trademark of Premier Farnell Limited 2019.