RB3 Series Rocker Switch



Applications / Markets


Commercial Appliances


Industrial Controls


Floor Care Appliances


Instrumentation


Medical/Dental


Electrical Housewares

cULus ENEC RoHS REACH

Specifications

Contact Ratings / Temp:
A - 16(8)A, 125/250VAC, T55, IP67
B - 20(8)A, 125/250VAC, T55, IP67
C - 25(8)A, 125/250VAC, T55, IP67
D - 16A, 6-48VDC, T55, IP67
E - 20A, 6-36VDC, T55, IP67
1 - 16(8)A, 125/250VAC, T125/55
2 - 20(8)A, 125/250VAC, T125/55
4 - 16A, 6-48VDC, 40T125/55
5 - 20A, 6-36VDC, 40T125/55

Agency Approvals: cURus, ENEC15
Ingress Protection: IP67 (Ratings A, B, C, D, E)
Electrical Life: 10,000 Cycles
Contact Resistance: 20mΩ Max. at 50VAC initial
Insulation Resistance: 100MΩ Min. at 500VDC
Dielectric Strength: 1,000VAC for 1 min.
Circuit: SPDT or SPST; momentary or latching

Features & Benefits

- **High Current Power Rocker Switch**
- **30.2mm x 13.8mm Panel Cutout; Snap-In**
- **Quick connect - 0.250" termination**
- **SPDT or SPST; momentary or latching function**
- **LED illumination options including two LED's**
- **Actuator marking options**
- **IP67 (Ratings A, B, C, D, E)**
- **UL61058-1 Certified, E194579**
- **UL60079-15 Certified, E554948**

Part Number Configurator

Series	Terminal	Function	Rating / Temp	Body Color	Actuator Color	Marking Color	Marking Type	LED #1	LED #2	LED Voltage
RB3	4 - 6.3mm Tab	1 - On-Off* 2 - On-On 3 - On-Off-On 4 - (On)-Off* 5 - (On)-On 6 - (On)-Off-(On) 7 - (On)-Off-On	A - 16(8)A, 125/250VAC, T55, IP67 B - 20(8)A, 125/250VAC, T55, IP67 C - 25(8)A, 125/250VAC, T55, IP67 D - 16A, 6-48VDC, T55, IP67 E - 20A, 6-36VDC, T55, IP67 1 - 16(8)A, 125/250VAC,T125/55 2 - 20(8)A, 125/250VAC, T125/55 4 - 16A, 6-48VDC, 40T125/55 5 - 20A, 6-36VDC, 40T125/55	1 - Black 2 - White	1 - Black 2 - White	0 - None 2 - White	0 - None 1 - I/O Vertical 2 -ON/OFF/ON Vertical 3 - ON/OFF Vertical 4 - ON/OFF Horizontal 9 - I/O/II Horizontal R - I/O Horizontal S - I/O/II Vertical	NONE - No LED 0 - White 1 - Red 3 - Green 4 - Blue 5 - Yellow	NONE - No LED 0 - White 1 - Red 3 - Green 4 - Blue 5 - Yellow	NONE - Not Illuminated 4 - 12V 5 - 24V 6 - 125V 7 - 250V

Notes:
** Function 1 and 4 not available with two LED's*
Custom colors and markings available upon request
( ) = denotes momentary function

Specifications subject to change without notice 8.26.2026

Body Dimensions
Non-Illuminated

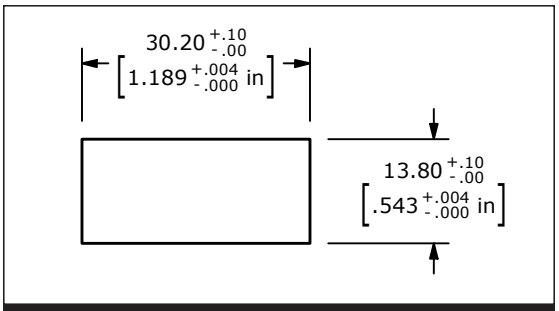

Recommended Panel Cutout

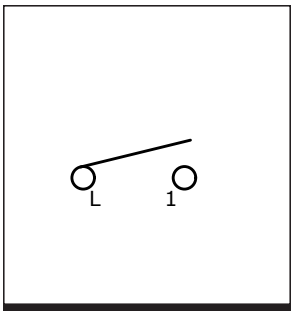

Schematic

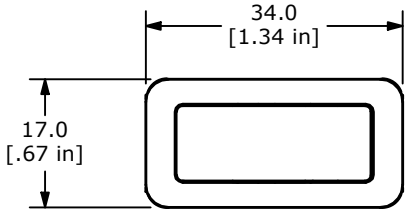

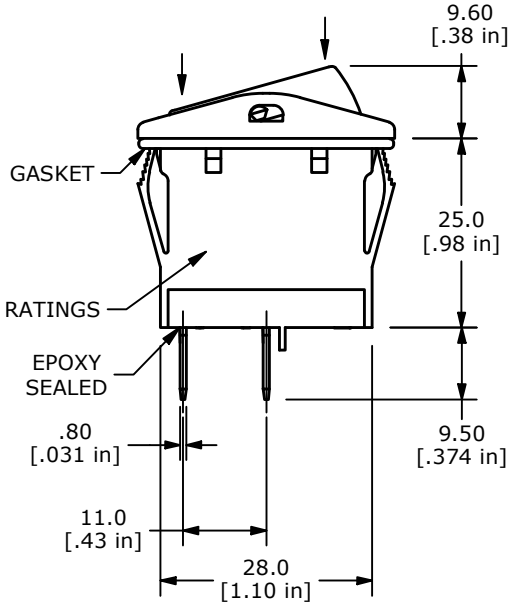

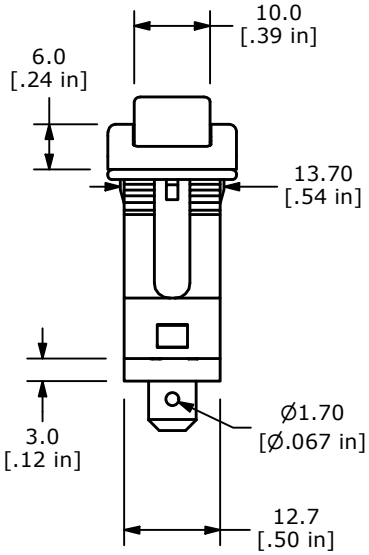

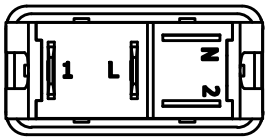

Body Dimensions
Single LED

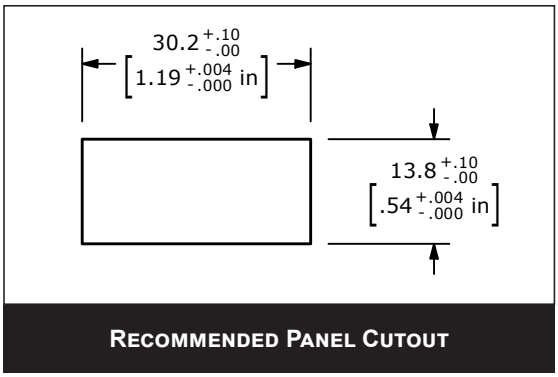

Recommended Panel Cutout

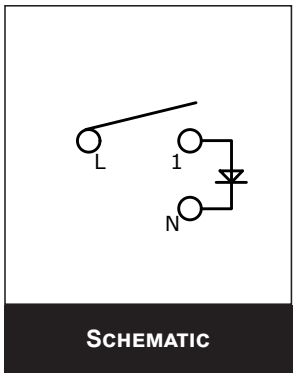

Schematic

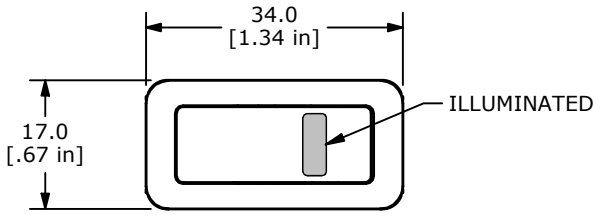

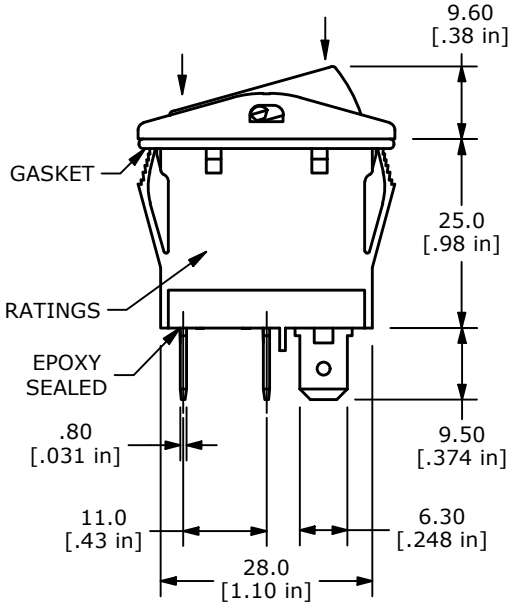

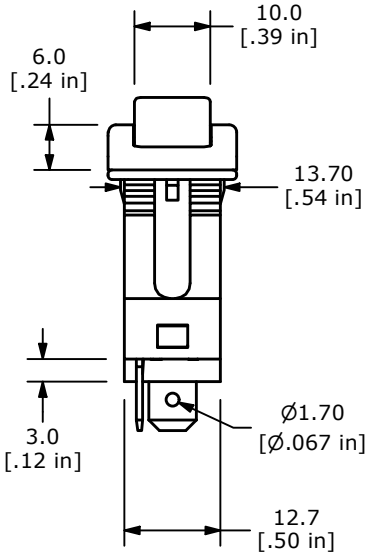

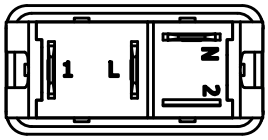

Body Dimensions
Dual LED

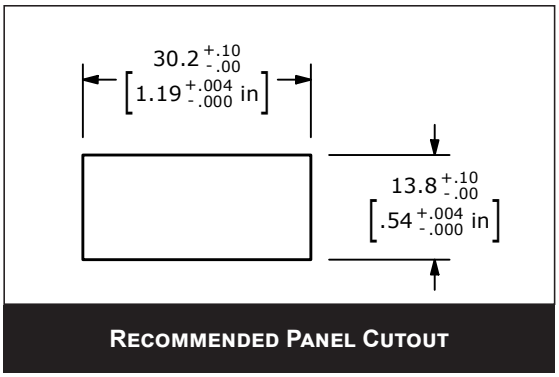

Recommended Panel Cutout

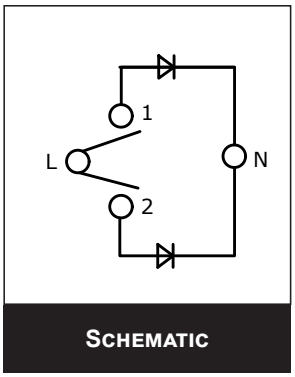

Schematic

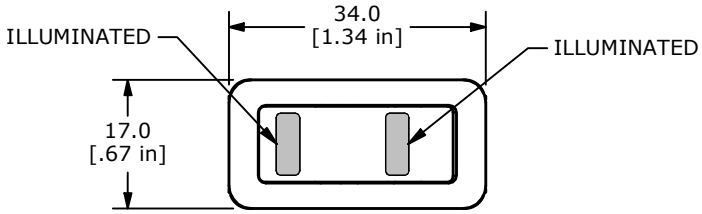

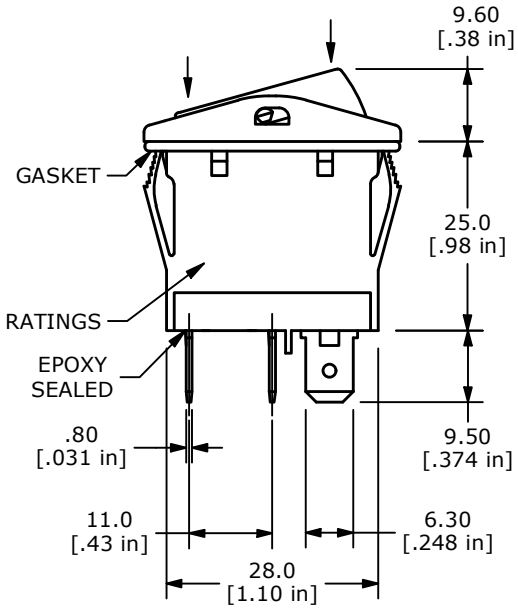

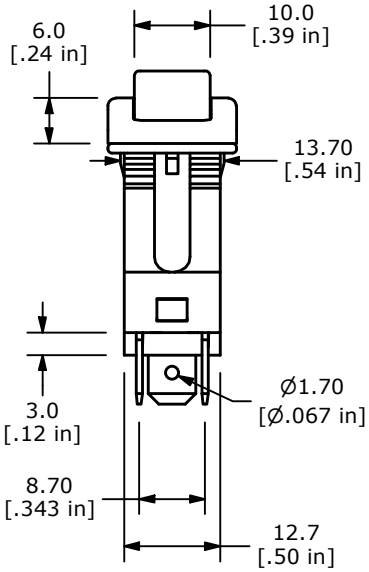

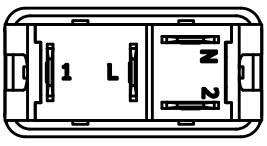

Marking Type

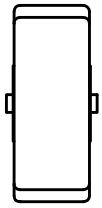

0 - NONE

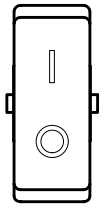

1 - I/O
VERTICAL

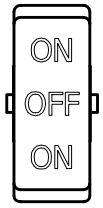

2 - ON-OFF-ON
VERTICAL

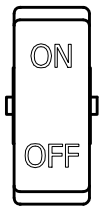

3 - ON-OFF
VERTICAL

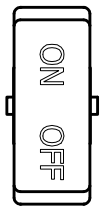

4 - ON-OFF
HORIZONTAL

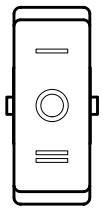

9 - I/O/II
HORIZONTAL

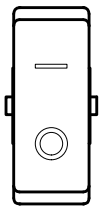

R - I/O
HORIZONTAL

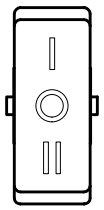

S - I/O/II
VERTICAL