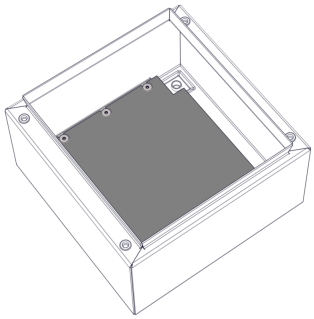

100110430

Mounting plate for 37.402012

Mounting plate for 37.402012

Drawing

Technical data

Height	158 mm
Width	388 mm

Commercial data

Order unit	1 Piece
Customs tarif number	85369095
Weight	0.955 kg
GTIN	4250157908506

ETIM classification

ETIM 8	EC000213

ROSE SYSTEMTECHNIK GMBH
Erbeweg 13-15
32457 Porta Westfalica, Germany

Tel.: +49 571 50 41-0
Fax: +49 571 50 41-6
Mail: rose@rose-pw.de