Sauls Wharf
House Crittens
Road Great
Yarmouth Norfolk
NR31 0AG

Telephone +44 (0)1493 602602
Email:
sales@midasdisplays.com
Email: tech@midasdisplays.com
www.midasdisplays.com

MVT-L101001(L)C	1280 x 800	LVDS Interface	Aurum TFT Series

Specification

Version: 2	Date: 25/08/2026

Revision

			Created By	Checked By
1	09/12/2025	First issue	WE	AB
2	25/08/2026	Updated drawing	Box Quantity	Weight / Display
			---	---

Display Features	
Display Size	10.10”
Resolution	1280 x 800
Orientation	Landscape
Appearance	RGB
Supply Voltage	3.3V
Interface	LVDS
Brightness	1000cd/m^2
Touchscreen	CTP
Module Size	229.70 x 149.15 x 7.40mm
Operating Temperature	-20°C ~ +70°C
Pinout	40 way FFC
Pitch	0.5mm

AURUM SERIES

MiDAS DISPLAYS
DESIGN • MANUFACTURE • SUPPLY

Also Available

Part Number	Description
MVT-L101001(LCR)	10.1" LVDS TFT, optional Lugs(L), CTP(C), RTP (R)
MVT-H101001(LCR)	10.1" HDMI TFT, optional Lugs(L), CTP(C), RTP (R)
MVT-E101001(LCR)	10.1" Embedded TFT, optional Lugs(L), CTP(C), RTP (R)

Display Accessories

Part Number	Description
MDIB-1416	HDMI to LVDS Interface Board
MCIB-40	Aurum HDMI-to-LVDS Carrier Board
MDIB-42	Aurum Embedded HDMI to LVDS board

For full design functionality, please use this specification in conjunction with the EK73215 + EK79001H display driver and FT5726-003 + CH571 touch driver specifications.(Provided Separately)

RoHS compliant

AURUM TFT Display Series Part Number System

MVT	-	L	1010	01	L	C
1		2	3	4	5	6

1 = MVT:	Midas Versatile TFT
2 = Interface	R=RGB L=LVDS
	H=HDMI E=Embedded
3 = Size:	Diagonal in inches (0430 = 4.3”)
4 = Series #:	00, 01, 02 etc
5 = Lugs	Blank = No lugs
	L = Lugs
6 = PCAP touch	Blank = No touch
	C = PCAP touch
	R = Resistive touch

MiDAS DISPLAYS
DESIGN • MANUFACTURE • SUPPLY

General Data

Display

Feature	Value
Size (inch)	10.10
Resolution (pixels)	1280(Horizontal) x 800(Vertical)
Type	TFT/IPS/NORMALLY BLACK/TRANSMISSIVE
Display Size (mm)	229.70 x 149.15 x 5.00
Active Area (mm)	216.96 x 135.60
Interface	24-bit LVDS
Connector type	40-way FFC
Connector Pitch (mm)	0.5
Colour Depth	16.7 M
Pixel pitch (mm)	0.1695 x 0.1695
LCD Driver IC	EK79202B or equivalent
Luminance without touch (cd/m^2)	1200
Viewing Direction (O'clock)	All

Touchscreen

Feature	Value
Type	Capacitive multi-touch
Touch Panel Size(mm)	229.70 x 149.15 x 1.90
Interface	USB or I2C (selectable via link on touch FPC)
Connector type	10-way FFC
Connector Pitch (mm)	0.5
Touch Driver IC	FT5726-003+CH571 or equivalent
ITO Glass thickness (mm)	0.55
Input method	Finger or Stylus
Transparency	≥ 88%
Surface hardness	> 6H
Guaranteed touches	> 35,000,000 times
Input force (g)	≤ 10

MIDAS DISPLAYS
DESIGN • MANUFACTURE • SUPPLY

Block Diagram

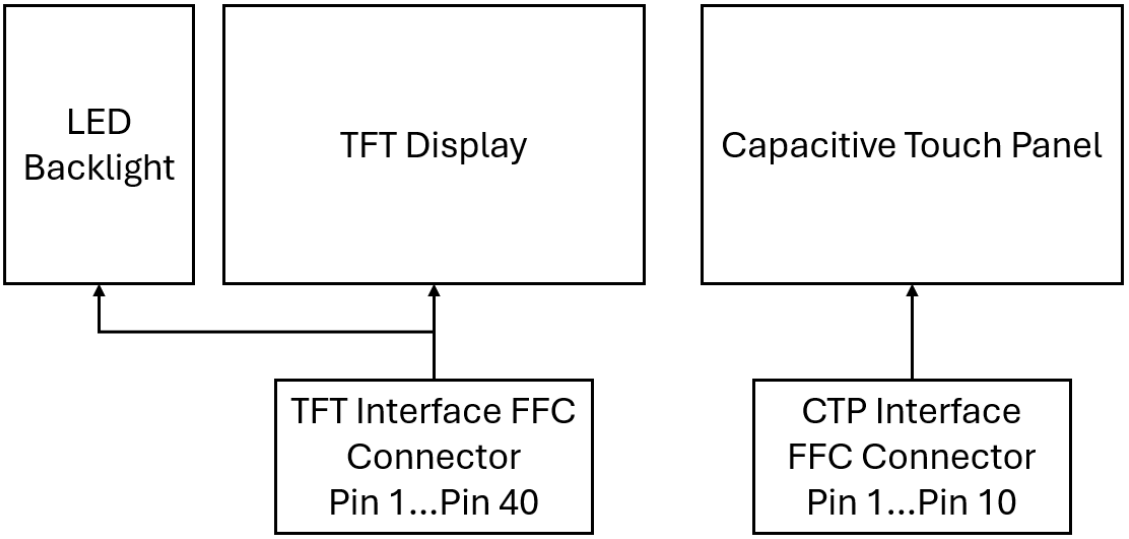

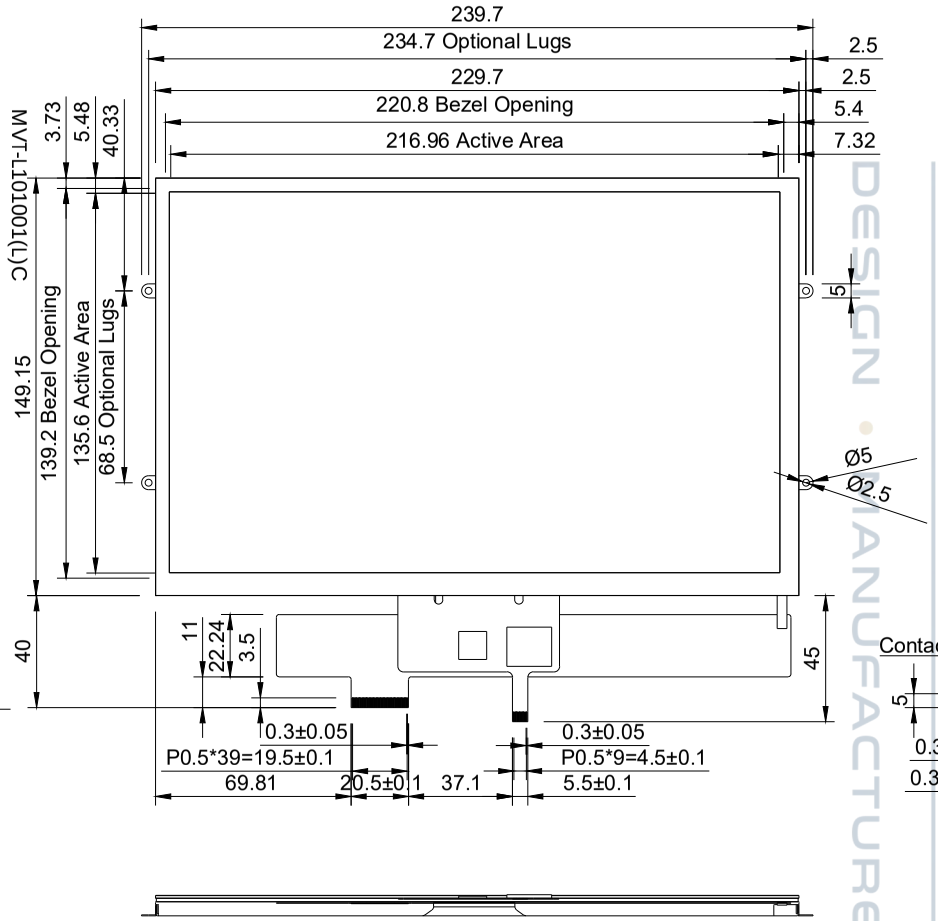

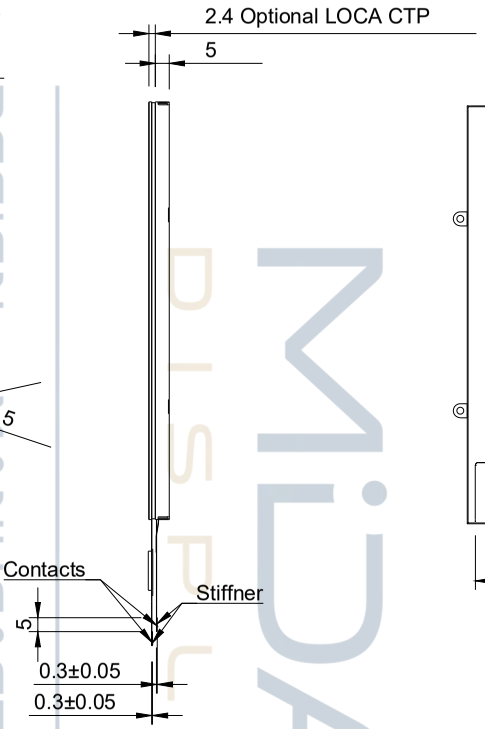

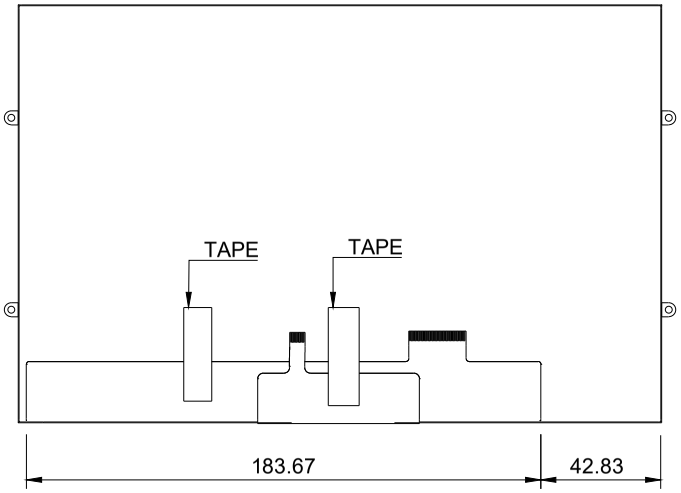

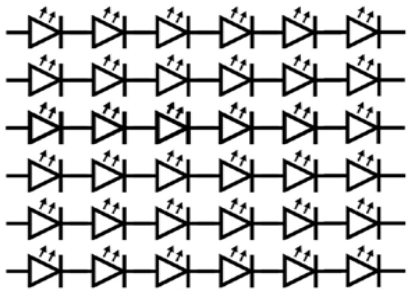

30 LED Circuit Diagram
16.2-19.8V@420mA
Brightness 1000cd/m^2 (Typical)

Drawing to scale

Created by: WE	Approved by: AB	Metric	Unspecified tolerances are ±0.5mm Drawings are for reference only
Product Type: Display		DWG No.: TBD	
Title: MVT-L101001(LC)	Rev.: 2	Date of issue: 25/08/2026	Sheet: 1/1

Absolute Maximum Ratings

Parameter	Symbol	Min	Max	Unit
Power Supply Voltage	VDD	-0.5	+4.0	V
Operating temperature	Top	-20	+70	°C
Storage temperature	Tst	-30	+80	°C

Electrical Characteristics

Display

Item	Symbol	Min	Typ.	Max	Unit
Power Supply	VDD	3.0	3.3	3.6	V
Input voltage	Vil	GND	-	0.3 x VDD	V
	Vih	0.7 x VDD	-	VDD	V
Input current	I_{VDD}	-	142	-	mA

Touch

Item	Symbol	Values			Unit
		Min	Typ.	Max	
Power Supply	VDDT 3.3V	2.7	3.3	3.6	V
Power Supply	VDD_5V	4.5	5	5.5	V
Input voltage	Vil	GND	-	0.3 x VDD	V
	Vih	0.7 x VDD	-	VDD	V
Input current	I_{VDD}	-	25	-	mA

Backlight

Item	Symbol	Values			Unit
		Min	Typ.	Max	
Supply Voltage	Vf	16.2	18	19.8	V
Supply Current	IL	-	420	-	mA
Power consumption	P	6.804	7.56	8.316	W
LED lifetime		-	50,000	-	H_r

MiDAS DISPLAYS
DESIGN • MANUFACTURE • SUPPLY

Pin Assignment

Display

Pin No.	Symbol	Description
1	NC	No connect
2	VDD	Power voltage
3	VDD	Power voltage
4	NC	No connect
5	/RESET	Display reset input, active low
6	STBYB	Standby mode, normally high
7	GND	Power ground
8	RXIN0-	LVDS data 0 negative input
9	RXIN0+	LVDS data 0 positive input
10	GND	Power ground
11	RXIN1-	LVDS data 1 negative input
12	RXIN1+	LVDS data 1 positive input
13	GND	Power ground
14	RXIN2-	LVDS data 2 negative input
15	RXIN2+	LVDS data 2 positive input
16	GND	Power ground
17	RXCLKIN-	LVDS clock negative input
18	RXCLKIN+	LVDS clock positive input
19	GND	Power ground
20	RXIN3-	LVDS data 3 negative input
21	RXIN3+	LVDS data 3 positive input
22	GND	Power ground
23	NC	No connect
24	NC	No connect
25	GND	Power ground
26	NC	No connect
27	NC	No connect
28	SELB	Low for 8 bit, high for 6 bit
29	NC	No connect
30	GND	Power ground
31	LED-	Cathode of LED backlight
32	LED-	Cathode of LED backlight
33	L/R	Scan mode left or right, normally high
34	U/D	Scan mode up or down, normally low
35	NC	No connect
36	NC	No connect
37	NC	No connect
38	NC	No connect
39	LED+	Anode of LED backlight
40	LED+	Anode of LED backlight

MIDAS DISPLAYS
DESIGN • MANUFACTURE • SUPPLY

Solder Links

Link	Description
I2C Touch	Short R7 and disconnect R6 on top right of Touch FPC
USB Touch	Short R6 and disconnect R7 on top right of Touch FPC

Touch

Pin No.	Symbol	Description
1	VDD_USB 5V	Positive power supply
2	USB_D-	USB interface, D- signal.
3	USB_D+	USB interface, D+ signal.
4	USB_VSS	Negative supply (USB)
5	VSS	Negative supply (I2C)
6	SDA	I2C Serial data input/output
7	SCL	I2C Serial clock input/output
8	VDDT 3.3V	Positive power supply
9	/RST	Global reset input, active low
10	/IN	External Interrupt, output

Solder Links

Link	Description
I2C Touch	Solder across 'I2C' and desolder 'USB'
USB Touch	DEFAULT - Solder across 'USB' and desolder 'I2C'

MIDAS DISPLAYS
DESIGN • SUPPLY

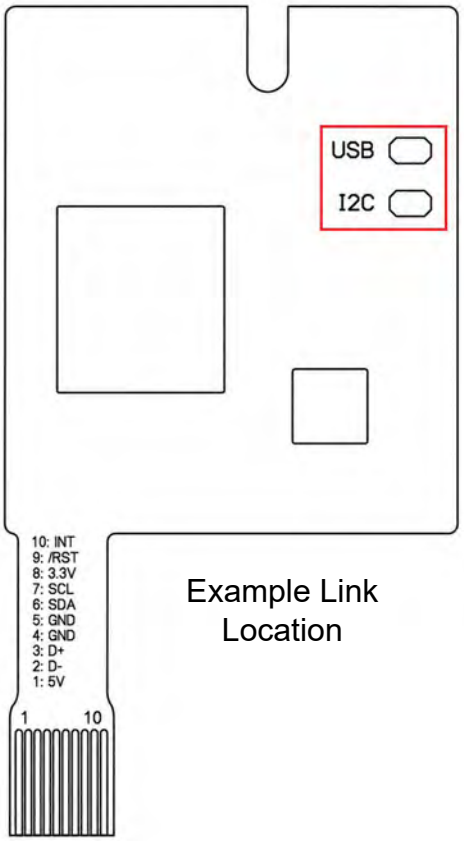

Example Link Location

Optical Characteristics

Item		Symbol	Conditions	Specifications			Unit
				Min	Typ.	Max	
Luminance		L		-	1000	-	cd/m^2
Contrast ratio		CR	θ=0°	700	900	-	
Response time	Rising	Tr	25℃	-	30	-	ms
	Falling	Tf					
CIE Colour Coordinate	RED	XR	Normal Viewing Angle	-0.02	0.618	+0.02	
		YR			0.328		
	GREEN	XG			0.335		
		YG			0.542		
	BLUE	XB			0.136		
		YB			0.145		
	WHITE	XW			0.322		
		YW			0.344		
Viewing Angle	Hor.	θx+	CR≥10	-	80	-	Degree
		θx-		-	80	-	
	Ver.	θy+		-	80	-	
		θy-		-	80	-	

MiDAS DISPLAYS
DESIGN • MANUFACTURE • SUPPLY

Definition of viewing angleθ x andθ y:

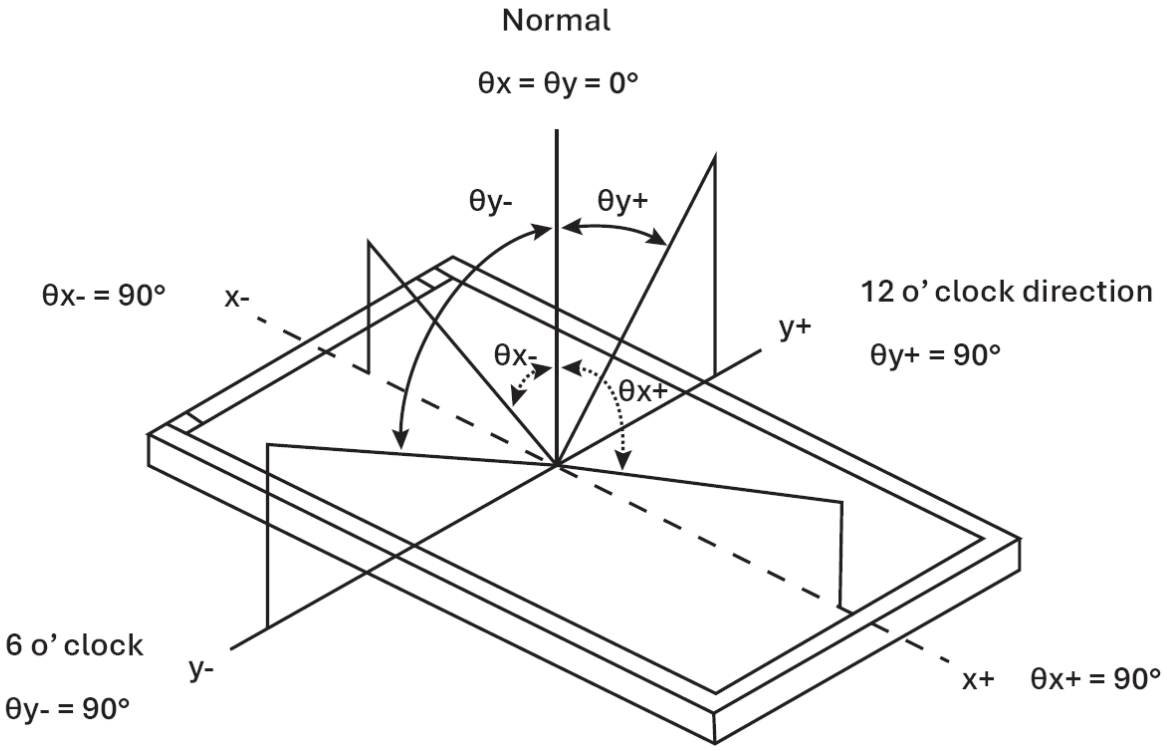

Definition of contrast ratio:

$$CR = \frac{\text{Brightness of non-selected dots (white)}}{\text{Brightness of selected dots (black)}}$$

Definition of response time:

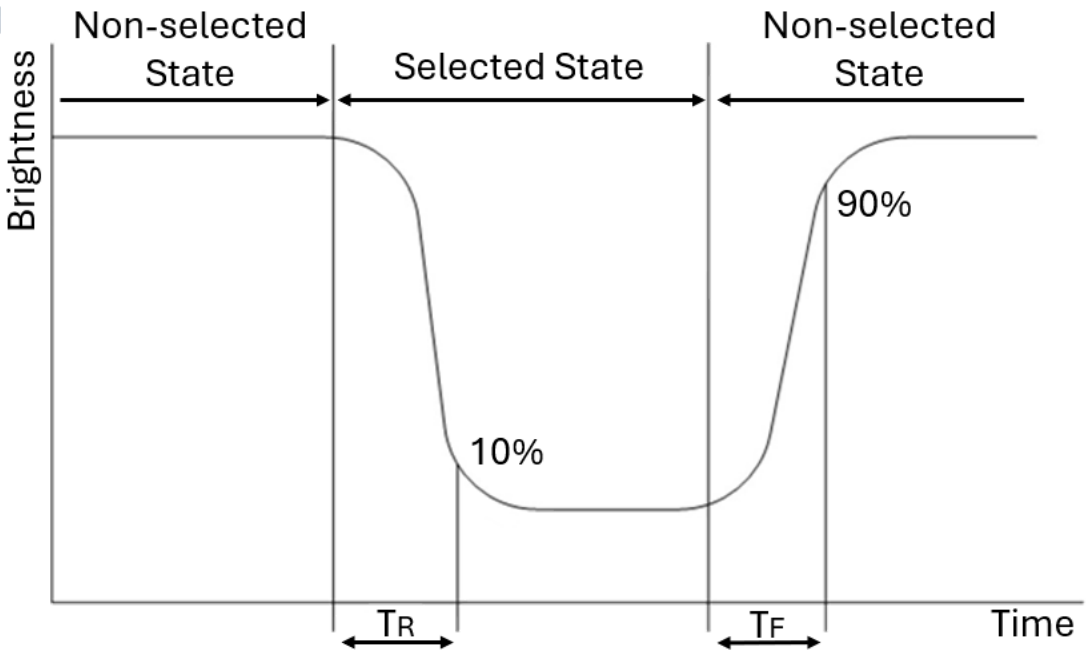

Brightness Test Equipment Setup

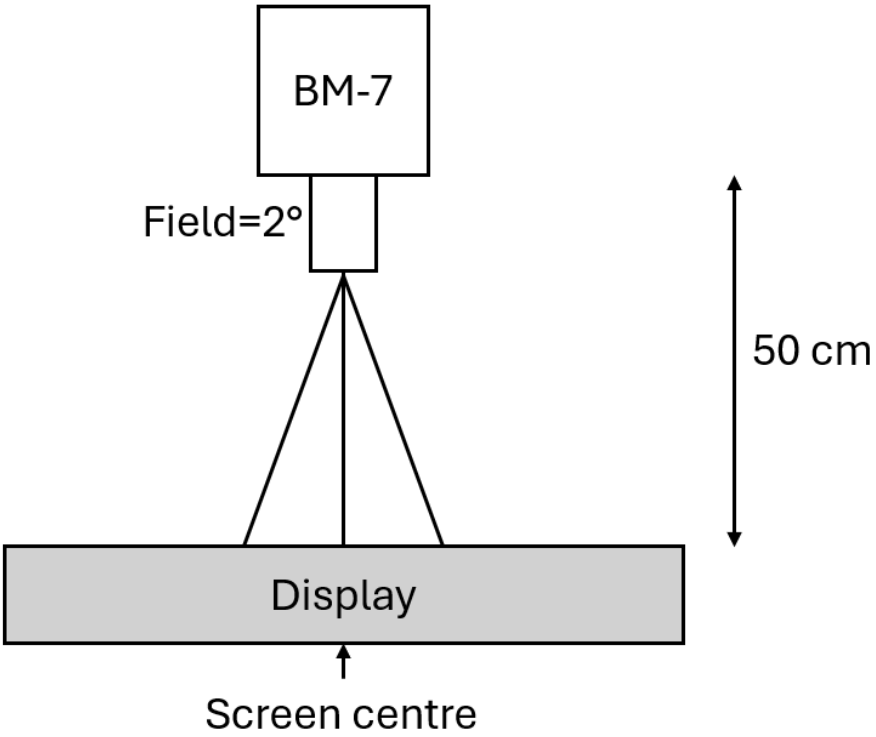

Field = 2° (As measuring “black” image, field = 2° is the best testing condition)

Brightness Test Point Setup

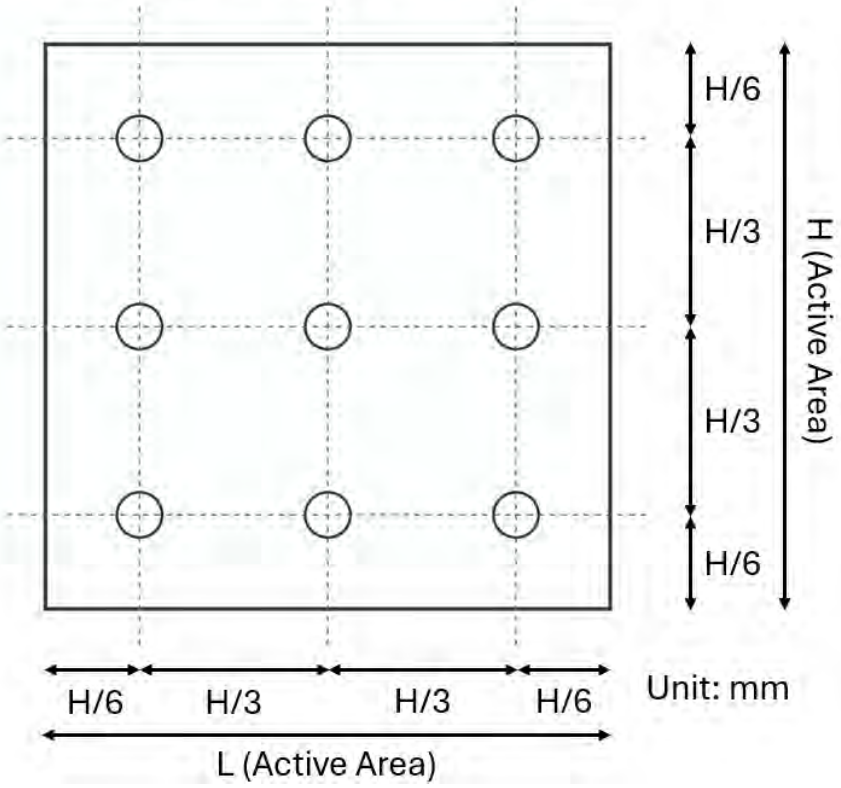

Display Timing Characteristics

Horizontal Input Timing

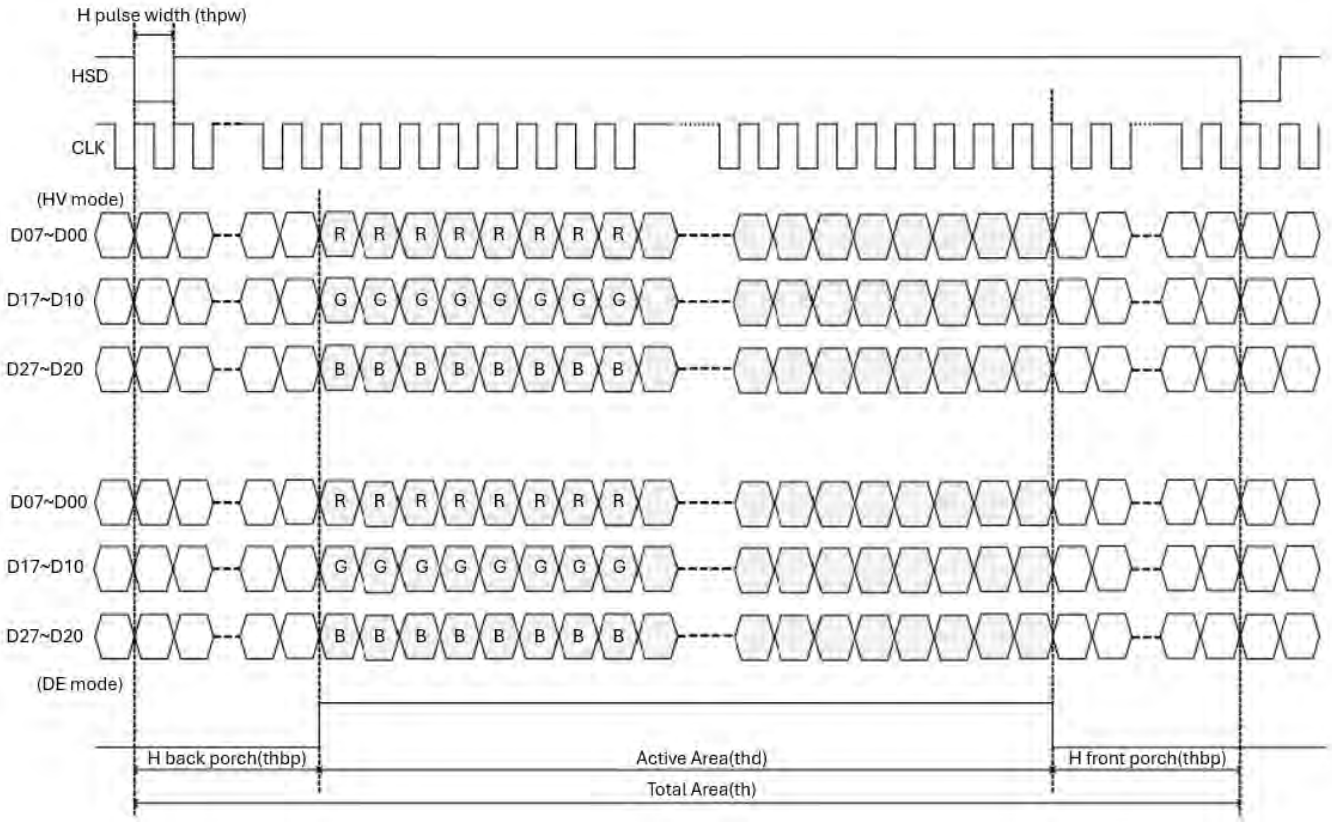

DISPLAYS

Vertical Input Timing

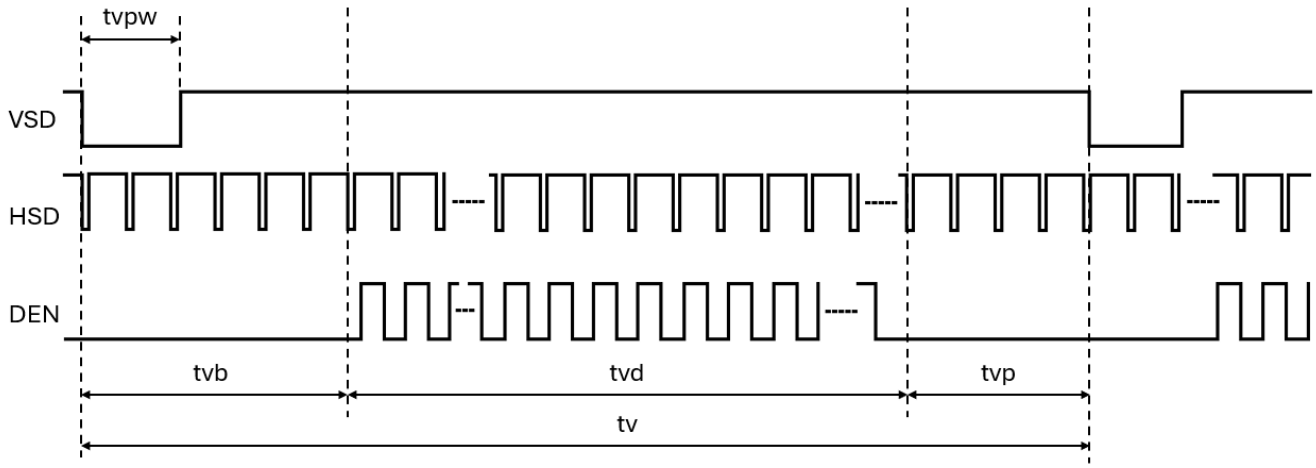

Display Timing

Item	Symbol	Min.	Typ.	Max.	Unit
DCLK Frequency	Fclk	66.3	72.4	78.9	MHz
Horizontal Display Area	Thd		1280		DCLK
HSYNC Period Time	Th	1380	1440	1500	DCLK
HSYNC Blanking	Thbp+Thfp	100	160	220	H
HSYNC Back Porch	Thbp	88	88	88	H
HSYNC Front Porch	Thfp	12	72	132	H
Vertical Display Area	Tvd		800		H
VSYNC Period	Tv	824	838	872	H
VSYNC Blanking	Tvbp+Tvfp	24	38	72	H
VSYNC Back Porch	Tvbp	23	23	23	H
VSYNC Front Porch	Tvfp	1	15	49	H

Scanning Mode

Scan Input		Scanning Direction
U/D	L/R	
GND	DVDD	Up to down, right to left
DVDD	GND	Down to up, left to right
GND	GND	Up to down, left to right
DVDD	DVDD	Down to up, right to left

MiDAS DISPLAYS
DESIGN • MANUFACTURE • SUPPLY

Reliability Test

Environmental Item	CONDITIONS	
High Temperature Storage	TA=80°C	96H
Low Temperature Storage	TA=-30°C	96H
High Temperature Operation	TA=70°C	96H
Low Temperature Operation	TA=-20°C	96H
High Temperature and High Humidity Operation	+60°C, 90%RH	96H
Thermal Shock	-30°C → +80°C	0.5H:5CYCLES

Handling Precautions

- The display panel is constructed of glass. Refrain from exposing it to mechanical shock, such as dropping it from a height.
- The display should not be disassembled as this can impact the functionality.
- In the event of damage to the display panel resulting in leakage of the liquid crystal substance, it is imperative not to ingest the substance. If contact occurs with skin or clothing, please wash the affected area thoroughly with soap and water immediately.
- Do not apply excessive force to the display surface or adjoining areas, as this may cause colour tone variations.
- The polariser covering the display surface of the LCD module is soft and easily scratched. Handle this polariser carefully.
- To prevent damage to the elements by static electricity, maintain an optimal work environment.
- Ensure that the body is grounded when handling the LCD module.
- Tools required for assembly, such as soldering irons, must be properly grounded.
- To reduce the generation of static electricity, avoid conducting assembly and other work under dry conditions.
- The LCD module is coated with a film to protect the display surface. Exercise caution when peeling off this protective film, as static electricity may be generated.
- Use only specific solvents, like Isopropyl or Ethyl alcohol, for cleaning the display. Clean with a soft, clean cloth and avoid submerging the display.
- The removal of the protective tape over components may result in damage or cause detachment from their solder pads.
- To minimise potential performance degradation of the LCD modules due to static electricity or other factors, please exercise caution when handling the modules. Avoid touching the following areas:
    - The exposed sections of the printed circuit board
    - The terminal electrode sections.

Assembly Precautions

- Do not make alterations or modifications to the display, including the glass, printed circuit board, components or FFC/FPC unless advised by Midas.
- Solder should only be applied to the specified terminals. For direct solder displays, a hot bar should be used, with 250-300°C for 3-5 seconds.
- The mounting method should consider mechanical stresses placed upon the display.
- Assembling operators should be grounded during the entire process of handling the display. Likewise, any tools, such as soldering irons, should be properly grounded.
- Avoid cleaning solutions from the assembly process, such as solder flux cleaning fluids, from getting onto the display as this can leak into the housing and cause internal damage.
- Assembly should not be conducted under ESD safe conditions to reduce the risk of static electricity.
- Continuous high temperatures during assembly may cause deformation or damage.
- Care should be taken when bending the FFC/FPC, as continuous bends may wear out the circuitry.
- The plating of the FFC/FPC can be worn down by multiple insertions.
- Lead free solder should be used to adhere with RoHS

MIDAS DISPLAYS
DESIGN • MANUFACTURE • SUPPLY

Operation Precautions

- The maximum ratings of the display should never be exceeded, or functionality cannot be guaranteed.
- Sudden shutdown caused by forced removal of the power supply may cause damage to the electronics of the display.
- Temperature and environment can influence the display and electronics, and the display should be tested by the end customer within expected working conditions to check for satisfactory performance.
- The user should implement external over-current and over-voltage protection.
- Do not apply signals to the logic input if the display is not powered
- A constant current source is recommended for the operation of the backlight. Using a constant voltage source without adequate current limitations can permanently damage the backlights operation.
- If the LCD modules have been operating for a long time showing the same display patterns may remain on the screen as ghost images and a slight contrast irregularity may also appear. Abnormal operating status can be resumed to be normal condition by suspending use for some time. It should be noted that this phenomenon does not adversely affect performance reliability.

Others

- Liquid crystals solidify at low temperature (below the storage temperature range) leading to defective orientation of liquid crystal or the generation of air bubbles (black or white). Air bubbles may also be generated if the module is subjected to a strong shock at a low temperature.
- When storing the LCD modules, avoid exposure to direct sunlight or light from fluorescent lamps. Keep the modules in bags designed to prevent static electricity charging under low temperature and normal humidity conditions (avoid high temperature, high humidity, and temperatures below 0℃). Whenever possible, store the LCD modules in the same packaging as when they were shipped from Midas.
- Midas maintains the right to change the passive components, and the PCB revision without informing the customer with the intent to continue supplying the product with the same or better performance.
- This display is supplied as a component for use within a completed assembly. As such it should be tested within the completed unit for suitability. Performance may vary depending on external components.
- This device will have susceptibility to external noise and interference; care should be taken to isolate or shield the product if necessary. Cables may require additional shielding or shortening.
- The disposal of a display should be handled by qualified industrial waste management and is not for standard waste disposal.
- Midas's warranty liability is strictly confined to the repair and replacement of purchased products. Midas shall not be held liable for any consequential damages.

Quality

Please refer to document 'Aurum Displays Quality Control Document', which is available on request

MiDAS DISPLAYS
DESIGN · MANUFACTURE · SUPPLY