Woofer



General Specifications

Nominal Diameter	: 15 inch
Rated Impedance	: 8Ω
Operating Bandwidth	: 30 to 2.5kHz (±3dB)
Max Power Handling Capacity	: 700 Watts
Rms Power Handling Capacity	: 200 Watts
Sensitivity (1W/M)	: 93dB (±3dB)
Voice Coil Diameter	: 3 inch

Physical Information

Basket	: Aluminium basket
Magnet Type	: 67 OZ ±5%
Cone Material	: Paper
Surround	: Cloth
Dust Cap	: PP
Damper	: Cloth

THIELE-Small Parameters

Resonance Frequency	Fs:	34.3Hz ±20%
DC Resistance	Re:	6.3Ω ±10%
Mechanical Q Factor	Qms:	2.3608 ±15%
Electrical Q Factor	Qes:	0.6243 ±15%
Total Q Factor	Qts:	0.4937 ±15%
Equivalent Cas air load	Vas:	237 L ±15%
Surface Area of Cone	Sd:	8.45m² ±15%
Efficiency Bandwidth Product	EBP	54.9 ±15%
Voice Coil Over Hang	X-max.	7.2mm

Curve Data

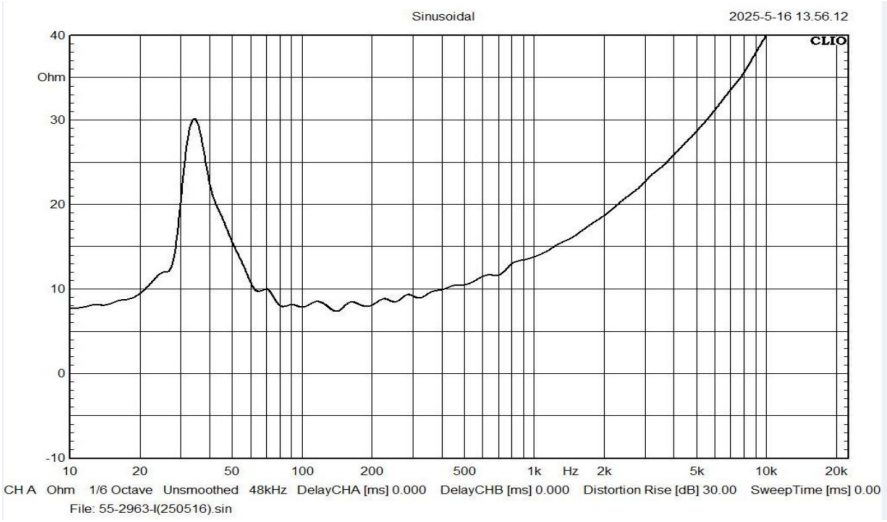

Woofer

Response Curve

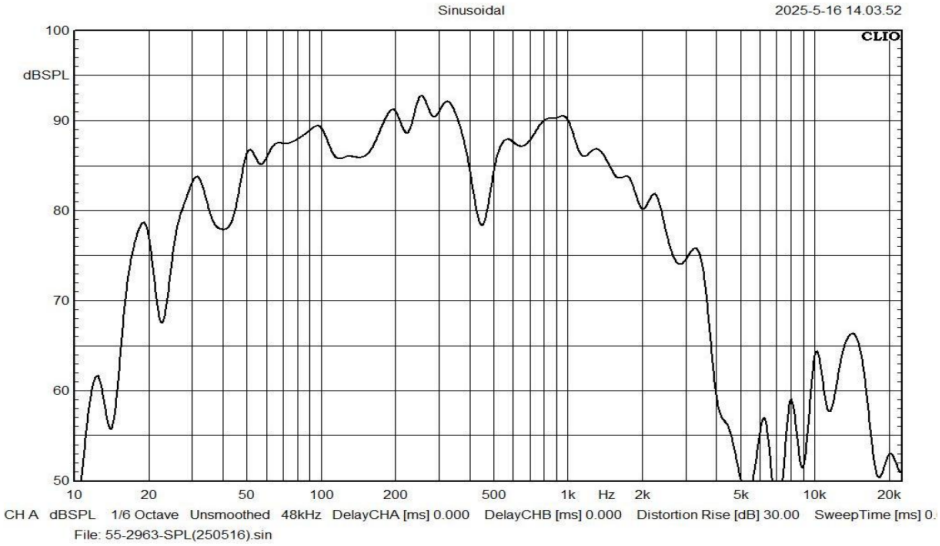

Diagram

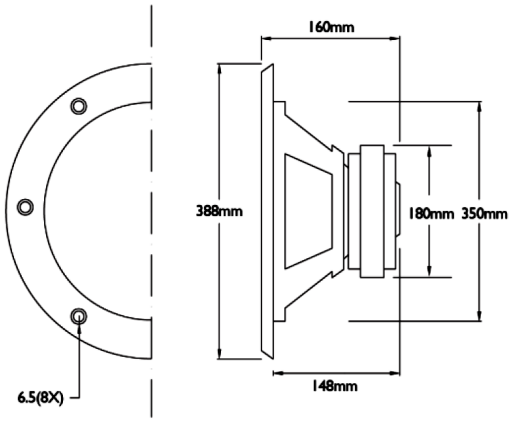

Part Number Table

Description	Part Number
Woofer with Paper Cone and Cloth Surround, Die Cast, 15″, 8Ω	55-2963

Dimensions : Millimetres

Important Notice : This data sheet and its contents (the “Information”) belong to the members of the AVNET group of companies (the “Group”) or are licensed to it. No licence is granted for the use of it other than for information purposes in connection with the products to which it relates. No licence of any intellectual property rights is granted. The Information is subject to change without notice and replaces all data sheets previously supplied. The Information supplied is believed to be accurate but the Group assumes no responsibility for its accuracy or completeness, any error in or omission from it or for any use made of it. Users of this data sheet should check for themselves the Information and the suitability of the products for their purpose and not make any assumptions based on information included or omitted. Liability for loss or damage resulting from any reliance on the Information or use of it (including liability resulting from negligence or where the Group was aware of the possibility of such loss or damage arising) is excluded. This will not operate to limit or restrict the Group’s liability for death or personal injury resulting from its negligence. Multicomp Pro is the registered trademark of Premier Farnell Limited 2019.