Piezo Horn Tweeter

multicomp PRO



RoHS Compliant

Description

The product is a piezo horn tweeter very commonly used in musical instrument, sound reinforcement and DJ speaker systems. Rectangular horn lens provides wide dispersion, ideal in sound reinforcement applications.

Features

- Excellent transient response, high efficiency
- Very high immunity to burnout
- Very high impedance at low frequencies eliminates the need for a crossover
- Very inexpensive and reliable to incorporate into any speaker system
- Perfect for direct incorporation into multi tweeter arrangements

General Specifications

Nominal Diameter	: 188mm×80mm×105mm
Rated Impedance	: 8Ω
Operating Bandwidth	: 3k - 20kHz (±3dB)
Max Power Handling Capacity	: 100 Watts
Rms Power Handling Capacity	: 50 Watts
Sensitivity (1W/M)	: 95dB (±3dB)
Magnet Type	: Piezoelectric tweeter

Diagram

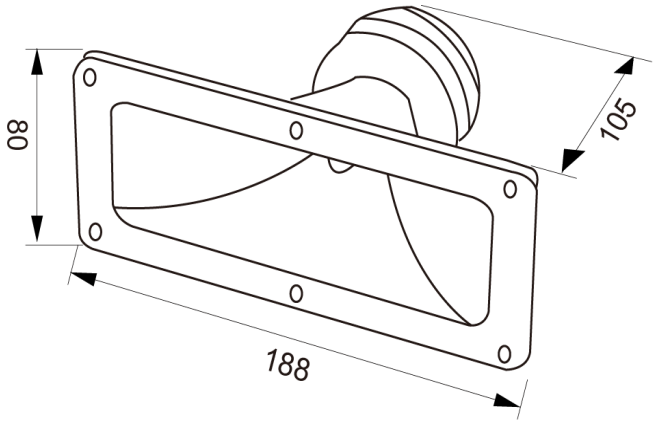

Dimensions : Millimetres

Piezo Horn Tweeter

Curve Data

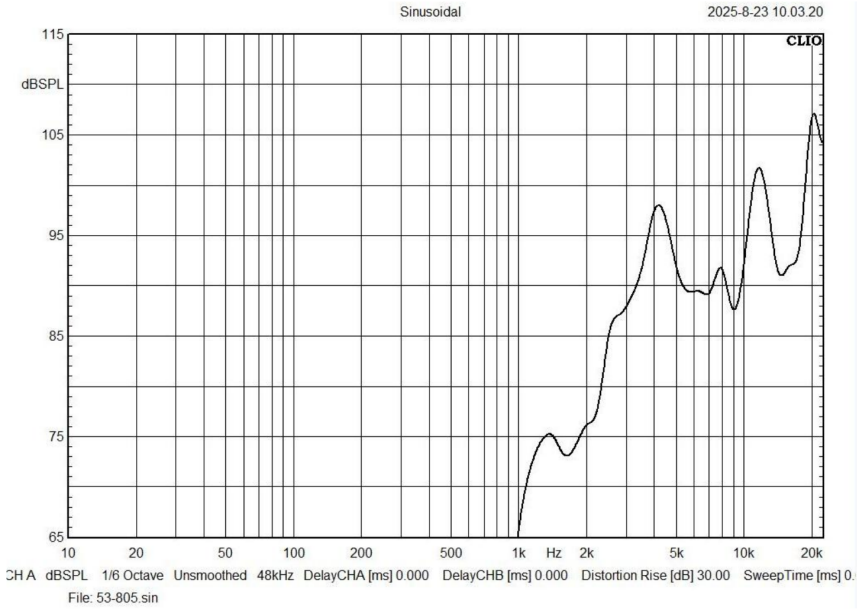

Part Number Table

Description	Part Number
Piezo Horn Tweeter, 3″ × 7″, 50W RMS, Rectangular, Panel Mount	53-805

Important Notice : This data sheet and its contents (the “Information”) belong to the members of the AVNET group of companies (the “Group”) or are licensed to it. No licence is granted for the use of it other than for information purposes in connection with the products to which it relates. No licence of any intellectual property rights is granted. The Information is subject to change without notice and replaces all data sheets previously supplied. The Information supplied is believed to be accurate but the Group assumes no responsibility for its accuracy or completeness, any error in or omission from it or for any use made of it. Users of this data sheet should check for themselves the Information and the suitability of the products for their purpose and not make any assumptions based on information included or omitted. Liability for loss or damage resulting from any reliance on the Information or use of it (including liability resulting from negligence or where the Group was aware of the possibility of such loss or damage arising) is excluded. This will not operate to limit or restrict the Group’s liability for death or personal injury resulting from its negligence. Multicomp Pro is the registered trademark of Premier Farnell Limited 2019.