12 Port DIN Rail Mountable Category 6A Patch Panel

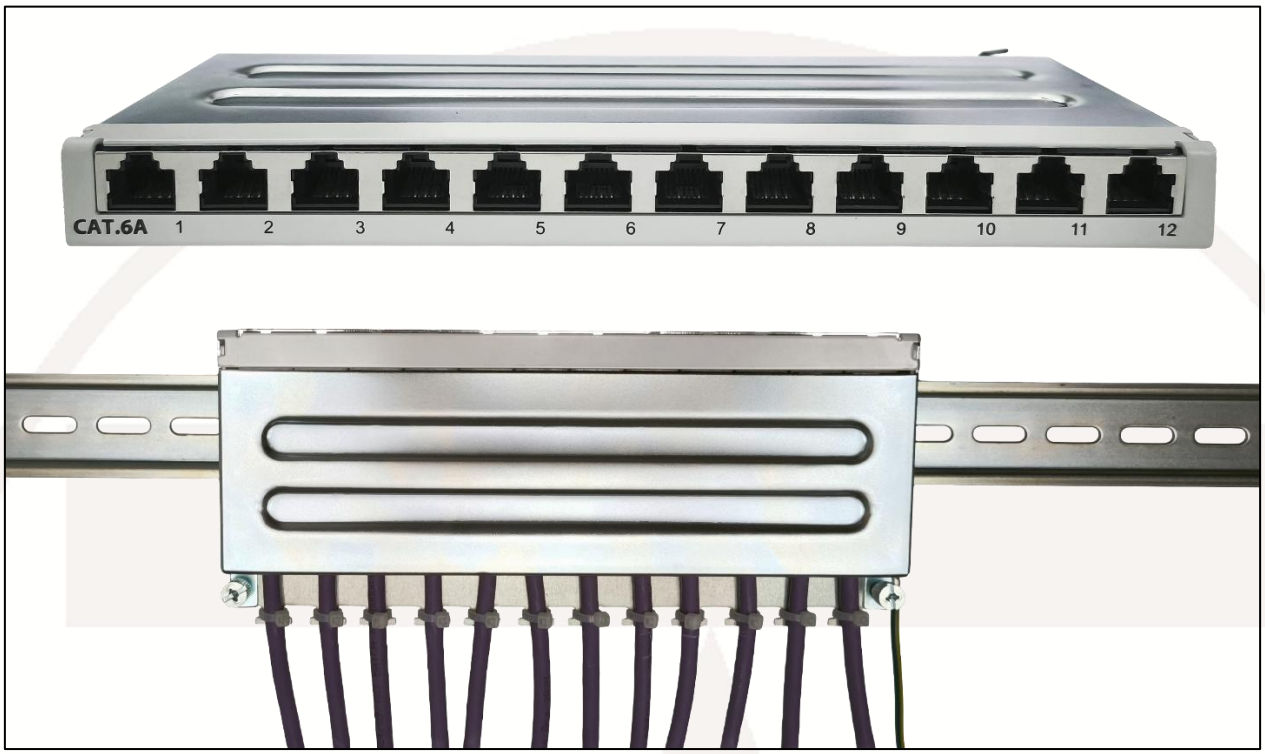

12 port DIN Rail Mountable Category 6A Patch Panel (SGDIN12)

This high density 12 port Category 6A panel is designed for integration in an industrial DIN rail installation.

Features

- Performs to Category 6A standard IEC 60603-7-51 at permanent link level
- T568B wiring label
- 110/Krone Universal IDC
- Compact, high density to minimise use of DIN rail space
- Fitted with DIN rail mounts and earth lead
- Screw-down cable fixture
- Supplied with cable ties
- 4PPoE compliant in accordance with IEEE802.bt Type 4

Specifications

- Weight: 640g (including primary packaging)
- Dimensions: 250x125x35mm (in primary packaging)
- Colour: grey

TUK Ltd, Unit 4, Wimbledon Stadium Business Centre, Riverside Road, London SW17 0BA

Tel: 020 8946 6688 Fax: 020 8879 7410 E-mail: sales@tuk.co.uk Website: www.tuk.co.uk

- Electrical:
  - Current rating:1.5A
  - Dielectric withstanding voltage: 1000vac 60 Hz
  - Insulation resistance: 500 MΩ Min
  - Contact resistance: 20 MΩ Max.
- Mechanical:
  - Housing: SGCC (Galvanized cold rolled steel)
  - Materials: PBT+G.F. and polycarbonate
  - RJ45 Jack Contact; Phosphor bronze, plated with 1.27µm/50µ" gold
  - Cavity conforms to FCC rules and Regulations part 68

Packaging: Individually packed in a cardboard carton

EAN: 5055386514615

Commodity Code: 85444920

Country of Origin: China



Internal view illustrating T586B marked terminals, cable clamps and cable



DIN rail mounting clips

Check for updates

TUK Ltd, Unit 4, Wimbledon Stadium Business Centre, Riverside Road, London SW17 0BA

Tel: 020 8946 6688 Fax: 020 8879 7410 E-mail: sales@tuk.co.uk Website: www.tuk.co.uk

ROHS Compliant

Code: SGDIN12

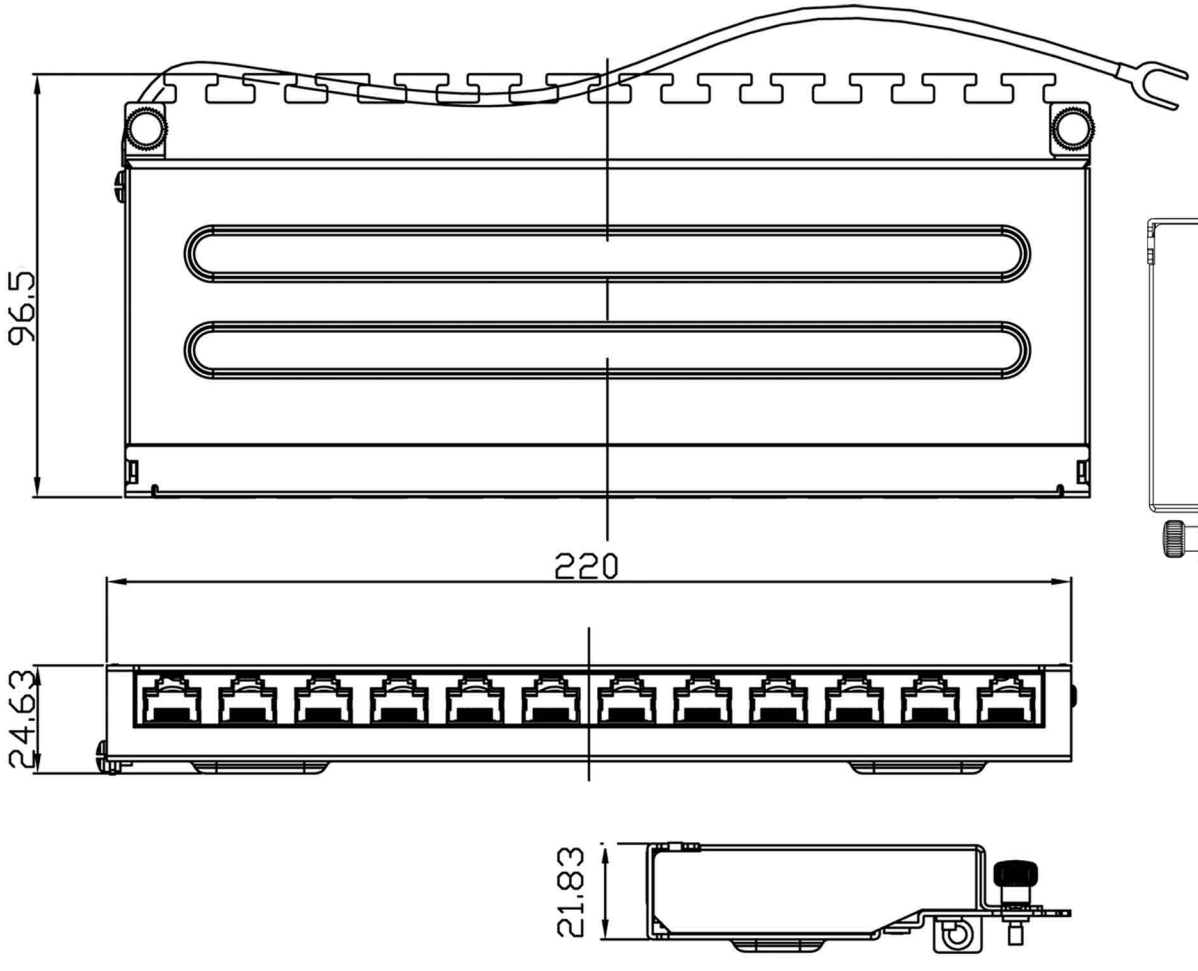

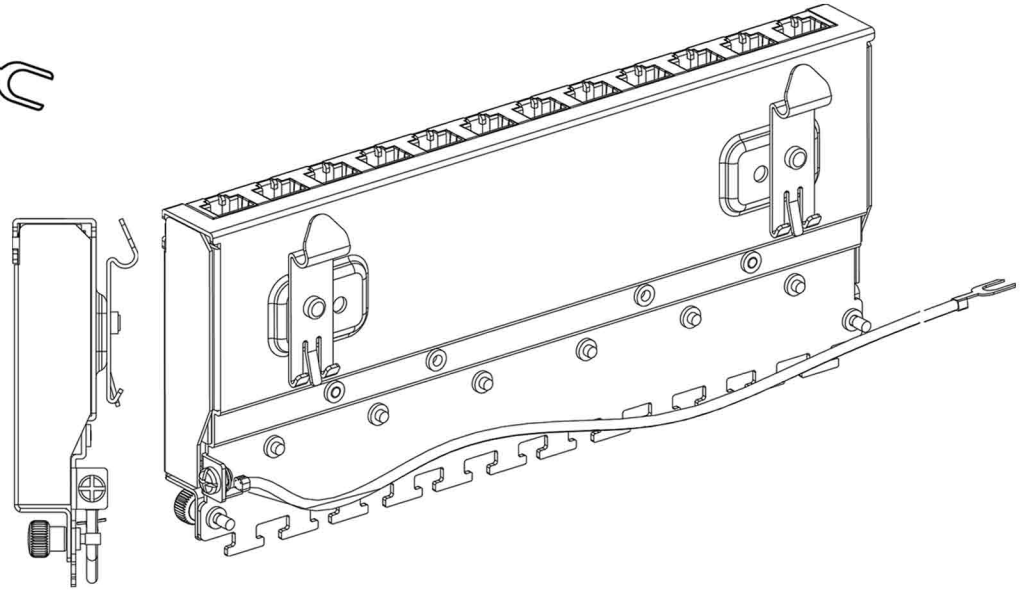

ELECTRICAL
CURRENT RATING:1.5A
DIELECTRIC WTTHSTANDING VOLTAGE: 1000VAC 60 Hz
INSULATION RESISTANCE: 500 MΩ MIN.
CONTACT RESISTANCE: 20 MΩ MAX.

MECHANICAL
Materials: PBT+G.F. and polycarbonate
RJ45 Jack Contact; Phosphor bronze, plated with 1.27μm/50μ" gold
Housing: SGCC
Cavity conforms to FCC rules and Regulations part 68

TUK Ltd, Unit 4, Wimbledon Stadium Business Centre, Riverside Road, London, SW17 0BA
Tel: 020 8946 6688 Fax: 020 8879 7410 Email: sales@tuk.co.uk Website: www.tuk.co.uk

Installation Manual

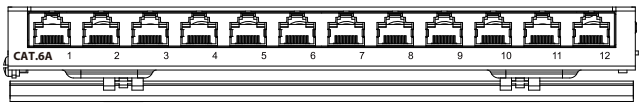

FRONT

Step 1:
Release the cover screws. Lift left and right sides of metal cover and slide the metal cover backwards to remove it.

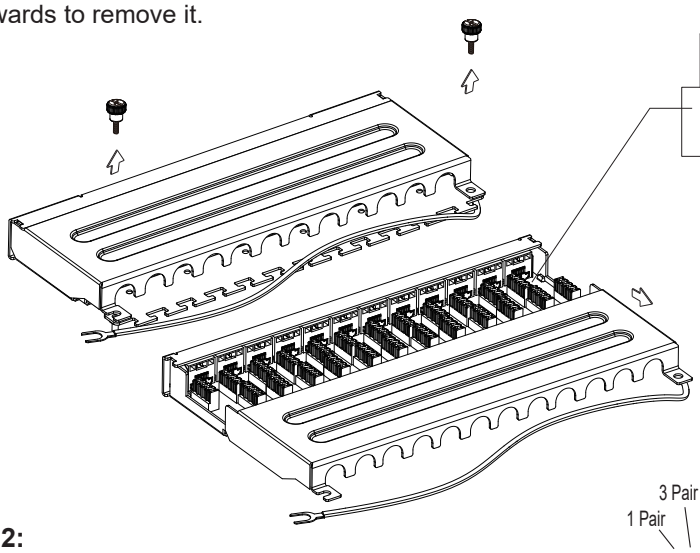

Wiring Label

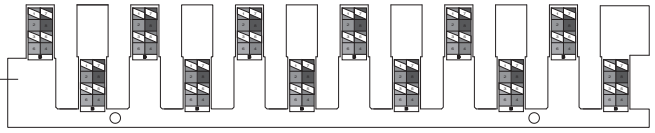

IDC Terminals	T568B Pair/Wire Color	
Pin 5 Pin 4	1	White/Blue Blue
Pin 1 Pin 2	2	White/Orange Orange
Pin 3 Pin 6	3	White/Green Green
Pin 7 Pin 8	4	White/Brown Brown

Step 2:
Strip and remove cable jacket as recommended.Fold braid/foil shielding back over jacket. Leave the foil on pairs intact; keep the pair foil as the suggested length.
N.B. different lengths. See A and B per diagram.

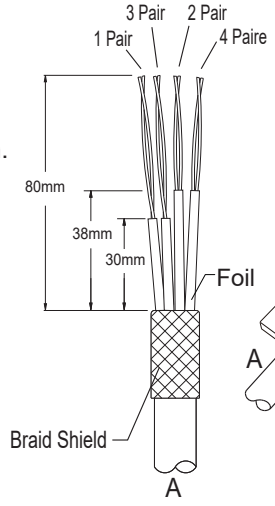

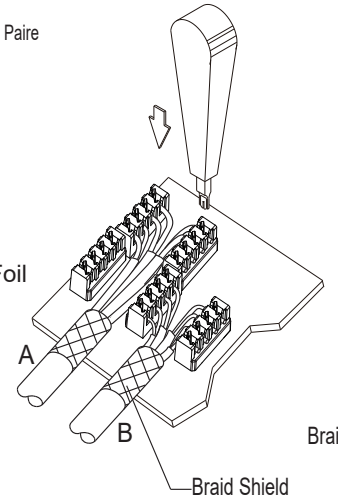

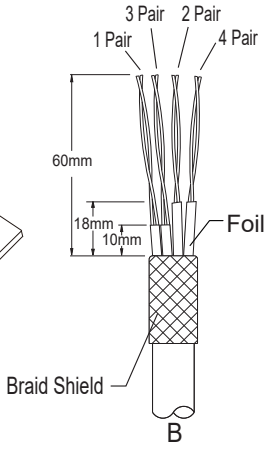

Step 3:
Refer to the colour coding on labels, allocate the pairs according to the colour coding in sequence; use LSA+ type insertion tool to terminate all cores.

Step 4:
Place earth clip on the cables, tighten the bolt until the cable is fastened to secure earthing between cable and panel. Use supplied cable ties to secure the cables. Replace the metal cover to finish the installation.

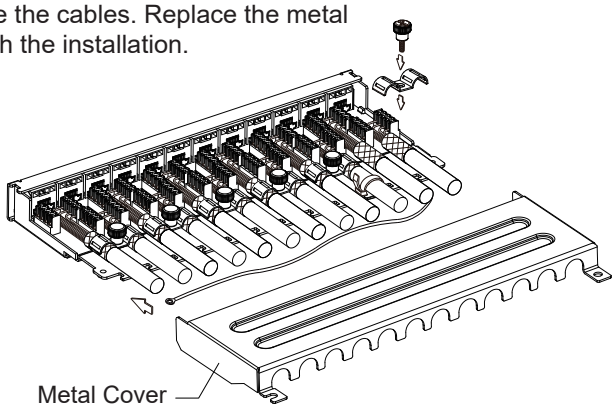

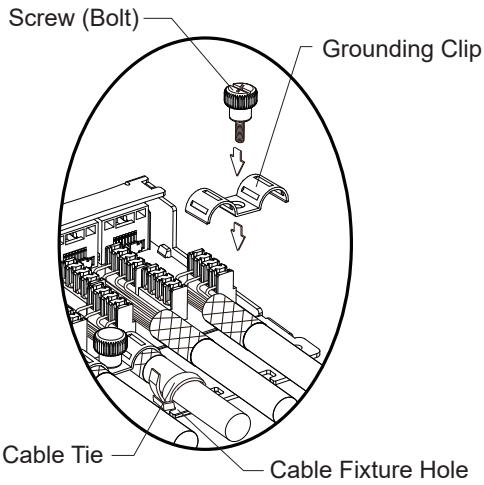

Step 5:
DIN rail mounting.

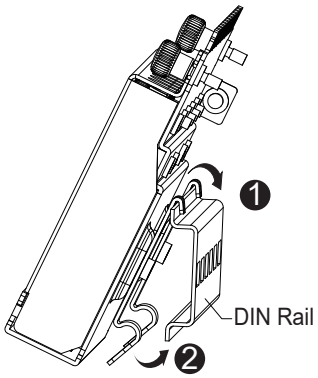

SGDIN12