TDK·Lambda

Technical Specification

D1SE480-24-A3
D1SE480-24-A4
D1SE480-24-A5

DIN-Rail power supply
1 phase / 480W / 24V

Industries & Applications

Automation | Industrial | Semi-Fab | Renewable | Comms | Test



Features & Benefits

- **AC or DC operation** enables use in a wide range of applications.
- **115% boost power capability** increases design flexibility and enable system retrofits.
- **Efficiencies of up to 95.1%** contribute to minimised energy consumption and an environmentally friendly energy footprint.
- **A peak inrush energy less than 0.6A²s** prevents input circuit breakers from nuisance tripping.
- **Push-in terminals** for tool-less installation and high vibration resistance.
- **Dedicated models with coated PCBs** to withstand harsh environments.

Technical data abstract[1]

Output voltage	*nom.*	24VDC
Adjustment range	*nom.*	22.5 .. 29VDC
Output current	*nom.*	20A
Boost current	*max.*	23A
Hold-up time	*min.*	25ms
Overload behaviour		CC + Intermittent mode (Hiccup)
Input voltage AC	*nom.* *max.*	100 .. 240VAC 90 .. 264VAC
Frequency range	*max.*	47 .. 63HZ
Inrush current AC[2]	*typ.*	9 / 11 / 20A <4ms
Inrush energy AC[2]	*typ.*	0.10 / 0.15 / 0.40A²s
Input voltage DC	*nom.* *max.*	110 .. 250VDC 93 .. 300VDC
Inrush current DC[3]	*typ.*	8A <15ms / 15A <12ms
Inrush energy DC[3]	*typ.*	0.25 / 0.80A²s
Output power	*nom.*	480W
Boost power	*max.*	552W / 200s
Conversion efficiency[2]	*typ.*	92.0 / 93.3 / 95.1%
Power losses[2]	*typ.*	41.7 / 34.5 / 24.7W
No-load consumption[2]	*max.*	1.7 / 1.7 / 1.6W
Power factor	*typ.*	0.95
Ambient operating temperature	*nom.* *max.*	-25 .. +55°Camb (-13 .. +158°Famb) -25 .. +70°Camb (-13 .. +131°Famb)
Service life MTBF[4]	*min.*	6.50M / 1.93M hrs
Service lifetime[2]	*min.*	112 000 / 122 000 / 131 400hrs
Width x Height x Depth		60x125x129.2mm (2.35x4.92x5.09in)
Weight	*max.*	900g (1.98lb)

[1] All values refer to STC unless otherwise stated | [2] 100 / 120 / 240VAC, 25°Camb | [3] 110 / 250VDC, 25°Camb | [4] 50% / 100% Pout_nom

Certifications & Approvals

IECEE CB SCHEME
IEC EN 61010-1
IEC EN 61010-2-201
IEC EN 62368-1 (Ed.3)

c UL us LISTED
UL CSA 61010-1
UL CSA 61010-2-201
E356563

c UL us
UL CSA 62368-1 (Ed.3)
E511889

IS 13252-1
R-41185469

Compliance & Registration

CE
EU Low Voltage Dir. 2014/35/EU
EU EMC Dir. 2014/30/EU
EU RoHS Dir. 2011/65/EU

UK CA
Safety and EMC Reg. 2016
Hazard. Substances Reg. 2012

For China RoHS information refer to the TDK website

CAE catalogues

traceparts Product Content Everywhere
E3 series
ePLAN data portal
3Dfindit

Commercial information

Order codes	D1SE480-24-A3 D1SE480-24-A4 D1SE480-24-A5
TARIC code	8504408390
Life-cycle status	Launch
Product revision	Q01
Single package	
Width	179mm (7.05in)
Height	101mm (3.98in)
Depth	145mm (5.71in)
Gross weight	1030g (2.27lb)
Bulk package	
Width	310mm (5.71in)
Height	203mm (7.99in)
Depth	540mm (21.26in)
Quantity	10 units
Pallet	
Width	1020mm (40.16in)
Length	1090mm (42.91in)
Quantity	240 units
Manufacturer warranty	3 years

Model selector

Model name	Output Power	Output Voltage	Feature
D1SE120-12-A4	120W	12VDC	DC OK
D1SE120-12-A5	120W	12VDC	DC OK, PCB coating
D1SE120-24-A3	120W	24VDC	
D1SE120-24-A4	120W	24VDC	DC OK
D1SE120-24-A5	120W	24VDC	DC OK, PCB coating
D1SE240-24-A3	240W	24VDC	
D1SE240-24-A4	240W	24VDC	DC OK
D1SE240-24-A5	240W	24VDC	DC OK, PCB coating
D1SE240-48-A4	240W	48VDC	DC OK
D1SE240-48-A5	240W	48VDC	DC OK, PCB coating
D1SE480-24-A3	480W	24VDC	
D1SE480-24-A4	480W	24VDC	DC OK
D1SE480-24-A5	480W	24VDC	DC OK, PCB coating
D1SE480-48-A4	480W	48VDC	DC OK
D1SE480-48-A5	480W	48VDC	DC OK, PCB coating
D1SE480-72-A4	480W	72VDC	DC OK
D1SE480-72-A5	480W	72VDC	DC OK, PCB coating

Add-ons and accessories



DBM buffer modules

In order to secure process uptime and reliability in 24V low-voltage systems, DBM buffer modules increase hold-up time or provide a reserve for peak loads.

DBM20
20A input/output, electrolytic capacitors, signalling & control, screw terminals

DBM20/E
20A input/output, electrolytic capacitors, signalling & control, spring clamp terminals

www.emea.lambda.tdk.com/uk/products/dbm20



DRM redundancy modules

For building fault tolerant 12/24V systems, DRM redundancy modules can be used to decouple 1+1 power supplies.

DRM40
40A output, 2x20A input, screw terminals, DC OK and balancing LEDs

DRM40B
40A output, 2x20A input, screw terminals

www.emea.lambda.tdk.com/uk/products/drm40



DDSM programmable DC/DC converter

Isolated buck-boost converter with a wide input/output voltage range.

DDSM120-0555-R0
5A output at 5..55V, input 11..52V, push-in terminals, display, DC OK, USB

DDSM240-0555-R0
10A output at 5..55V, input 11..52V, push-in terminals, display, DC OK, USB

www.emea.lambda.tdk.com/uk/products/ddsm



DDA DC/DC converter

Non-isolated step-down converter for creating additional DC bus voltages from a single DC input source.

DDA250
Single output 20A at 3.3..15V, input 9..53V, DC OK LED, screw terminals

DDA325
Dual output 14A at 3.3..24V and 8A at -3.3..-24V, input 9..40V, DC OK LEDs, screw terminals

DDA500
Dual output 2x20A at 3.3..15V, input 9..53V, DC OK LEDs, screw terminals

www.emea.lambda.tdk.com/uk/products/dda



DUSH DC-UPS

In mission critical applications, the DUSH serves as a backup solution to deliver power from a battery.

DUSH960-1248-0M
20A input/output/battery, 12..48V programmable, buck-boost converter, battery interface, Modbus/RTU, LCD, 5A AUX output, push-in terminals

DUSH960-1248-1M
20A input/output/battery, 12..48V programmable, buck-boost converter, battery interface, Modbus/RTU, LED indication, push-in terminals

www.emea.lambda.tdk.com/uk/products/dush

Index

1. General 6
2. Electrical output 7
3. Electrical input AC 8
4. Electrical input DC 9
5. Performance 10
6. Ambient conditions 11
7. Reliability and Service lifetime 13
8. Dimensions & Mechanical data 14
9. Installation clearances 15
10. Wiring & Connection 15
11. Signaling & Control 16
12. Block diagram 16
13. Device protection 17
14. Electrical Safety 17
15. Electromagnetic immunity 19
16. Electromagnetic emission 20
17. Certifications & Approvals 21
18. Designed to meet 21
19. Compliance & Registration 22
20. Application notes 22

List of abbreviations

avg.	*average*	The arithmetic average calculated from a row of values.
CC		Constant output current
CGD		Corner grounded delta (AC power system)
chap.		Chapter
Dir.		Directive
eCap		Electrolytic capacitor
EMC		Electromagnetic Compatibility
ES		Electrical Energy Source
HIPOT		High Potential Test
Iac		AC input current under a particular operating condition
Iout		DC output current under a particular operating condition
Iout_boost		Available current reserve beyond Iout_nom (w/o a drop in Uset) that can be delivered for a limited time.
Iout_nom		Continuous nominal DC output current under STC.
Iout_ol		Max. intermittent DC output current in an overload situation and a shortfall of Uset.
Iout_sc		Max. short circuit DC output current and Uout close to zero.
ITU		International Telecommunication Union
max.	*maximum*	The maximum value which a parameter can assume, or which must not be exceeded.
MCB		Miniature circuit breaker
min.	*minimum*	The minimum value which a parameter can assume, or must not be fallen below.
MOV		Metal Oxide Varistor
MTBF		Mean Time Between Failure
nom.	*nominal*	The ideal or reference value of a technical parameter which is guaranteed under STC. All nominal values in this document refer to each other and represent the general specification of the device.
OCP		Overcurrent protection
OTP		Overtemperature protection
OVP		Overvoltage protection
PCB		Printed Circuit Board
PELV		Protective Extra Low Voltage
PE		Protective Earth
PFC		Power Factor Correction
Pout		Output power under a particular operating condition with reference to Pout_nom
Pout_boost		Available power reserve beyond Pout_nom that can be delivered for a limited time.
Pout_nom		Nominal output power
PSU		Power supply unit
Reg.		Regulation
SELV		Safety Extra Low Voltage
STC		Standard test conditions (see „1. General“ on page 6)
typ.	*typical*	The typical value of a parameter is not guaranteed but can be assumed under STC. The min. or max. value must be determined during the engineering process of the end application.
Uout		DC output voltage under a particular operating condition
Uout_nom		Nominal DC output voltage
Uset		Manually set output voltage via voltage potentiometer
UVP		Undervoltage protection
Vac		AC input voltage under a particular operating condition
Vac_nom		Nominal AC input voltage
/		Separator between two values. The conditions to which the values refer can be found in the last column of the table.
..		Specifies a range of values.
<		The parameter is less than or equal to the specified value
>		The parameter is greater than or equal to the specified value

Table data structure

X. Technical category			
Technical parameter	Characteristic (optional)	Values	Condition (optional)

1. General

Proper handling of the product
The faultless and safe operation of the products requires proper transport, proper storage, set-up, assembly, installation, commissioning, operation and maintenance. The permissible ambient conditions must be observed. Instructions in the associated documentation must be observed.

Protection enclosure required
The device must be installed in a protective housing or control cabinet to which only qualified personnel have access.

Humid environments
Do not operate the device in a damp environment or in an environment where condensation is likely to occur.

Switch or circuit-breaker mounting position
A switch or circuit-breaker must be mounted near the equipment.

Observe country-specific regulations
In addition to the product documentation, the relevant country-specific regulations for the installation of the device must be observed.

Prohibited electrical/mechanical modifications
The product must not be modified in any way electrically or mechanically. Modifications can result in fatal injuries and damage to property.

Expiry of the manufacturer's warranty
The power supply is maintenance-free. Repairs can only be carried out by the manufacturer. Opening the housing voids the manufacturer's warranty.

Use of third-party products
If third-party products and components are used for power or voltage increase, buffering (primary or secondary side), EMC filtering, redundancy or for load protection, it must be approved by TDK-Lambda.

Standard test conditions
Unless otherwise stated, all values are specified in normal mounting position, at full load, nominal input and output voltages, 25°C (131°F) ambient temperature and a run-in time of 5 minutes.

1.1 Description of user elements

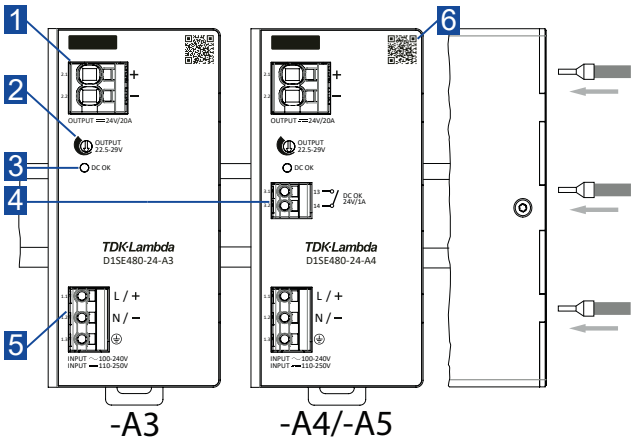

1 Push-in terminal, DC output
2 Single turn potentiometer for adjusting the output voltage
3 Green DC-OK status LED
4 Push-in terminal for signal contacts
5 Push-in terminal, AC input
6 Web link to product documentation

For more detailed information on the input/ouput wiring and the connection of the signalling contacts, please refer to „10. Wiring & Connection“ on page 15.

Fig. 1: Description of user elements

2. Electrical output

Output voltage [Uout_nom]	*nom.*	24V_{DC}	
Adjustment range [Uset]	*nom.*	22.5 .. 29V_{DC}	
Adjustment tolerance	*max.*	±3%	at upper/lower end position of voltage potentiometer
Factory default		24V_{DC} (±0.5%)	
Output current [Iout_nom]	*nom.*	20A	
Boost current [Iout_boost]	*max.*	23A / 200s	> 108V_{AC}, <55°C_{amb} < 108V_{AC}, <45°C_{amb}
Overload behaviour		Constant current + Intermittent mode (Hiccup)	see Fig. 3
Short-circuit proof		Yes, auto-recovery	
Instant SC current [Iout_sc]	*max.*	90A <1ms	
SC hiccup current	*max.* *avg.*	50A / 50ms 10A / 10s	
Start-up delay	*typ.*	0.9s	
Rise time	*typ.* *typ.*	7ms 14ms	0% P_{out_nom} 100% P_{out_nom}, resistive load
Voltage overshoot	*typ.*	0.2V_{DC}	
Fall time	*typ.*	49ms	
Hold-up time	*min.*	25ms	100 .. 240V_{AC}
Output capacitance	*max.*	7670µF	
Capacitive load start-up	*max.*	20 000µF	22.5 .. 29V_{DC}
Feedback voltage	*max.*	33V_{DC}	
Feedback energy	*max.*	1.97J	
Return current	*max.*	63mA	OFF mode
Line regulation	*max.*	0.02%	90 .. 264V_{AC}
Load regulation	*max.*	0.55%	90 .. 264V_{AC}
Dynamic response	*typ.*	820mVpp	90 .. 264V_{AC}, 10 .. 100% P_{out_nom}, transient frequency 10Hz
Ripple & noise voltage*	*max.* *max.*	20mVpp 25mVpp	90 .. 264V_{AC}, +25 .. +70°C_{amb} 90 .. 264V_{AC}, -25 .. +25°C_{amb}

*The measurement was performed with a short twisted pair cable using a 120µF eCap and a 0.1µF cCap connected in parallel. A bandwidth limit of 20MHz is required.

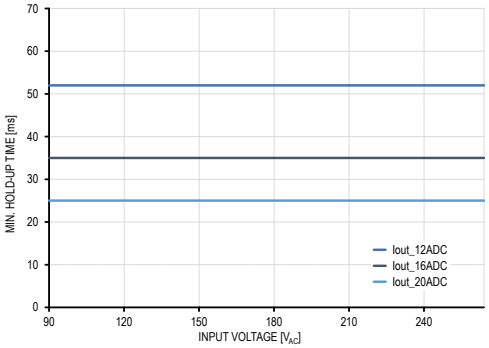

Fig. 2: Hold-up times under different load conditions as a function of the input voltage

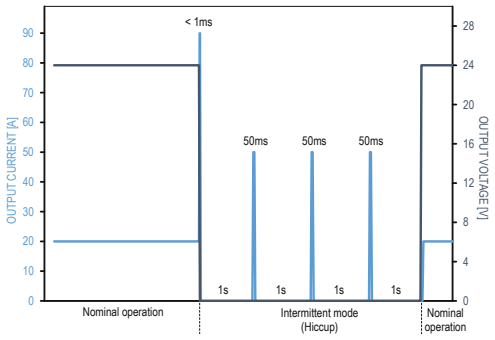

Fig. 3: Typical short circuit behavior

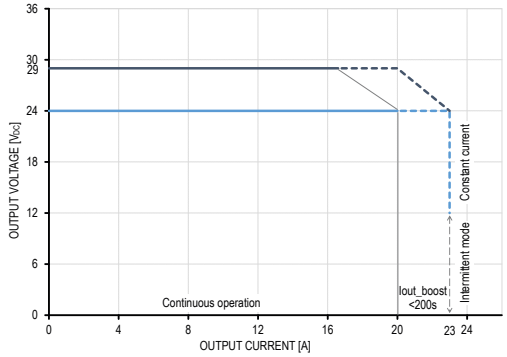

Fig. 4: Boost current capability up to 55°C_{amb}

Unless otherwise stated, all values are specified in normal mounting position, at full load, nominal input and output voltages, 25°C (77°F) ambient temperature and a run-in time of 5 minutes.

3. Electrical input AC

AC power systems		TT, TN, IT, CGD	
Input voltage [Uin_nom]	*nom.*	100 .. 240VAC	1AC, N, PE
Input voltage [Uin_max]	*max.*	90 .. 264VAC	
Withstand voltage	*max.*	300VAC / 30s	
Mains frequency	*nom.*	50/60Hz	
Frequency range	*max.*	47 .. 63Hz	
Input current	*max.*	5.6A	100 .. 240VAC ±10%
Input current RMS	*typ.*	5.3A	100VAC
	typ.	4.5A	120VAC
	typ.	2.3A	240VAC
Crest factor	*typ.*	1.6	100VAC
	typ.	1.6	120VAC
	typ.	1.7	240VAC
Turn-ON voltage	*typ.*	80VAC	
Turn-OFF voltage	*typ.*	80VAC	
Input capacitance	*max.*	360µF	
Inrush current	*typ.*	9A <4ms	100VAC, 25°Camb, cold start
	typ.	11A <4ms	120VAC, 25°Camb, cold start
	typ.	20A <4ms	240VAC, 25°Camb, cold start
Inrush energy	*typ.*	0.10A²s	100VAC, 25°Camb, cold start
	typ.	0.15A²s	120VAC, 25°Camb, cold start
	typ.	0.40A²s	240VAC, 25°Camb, cold start

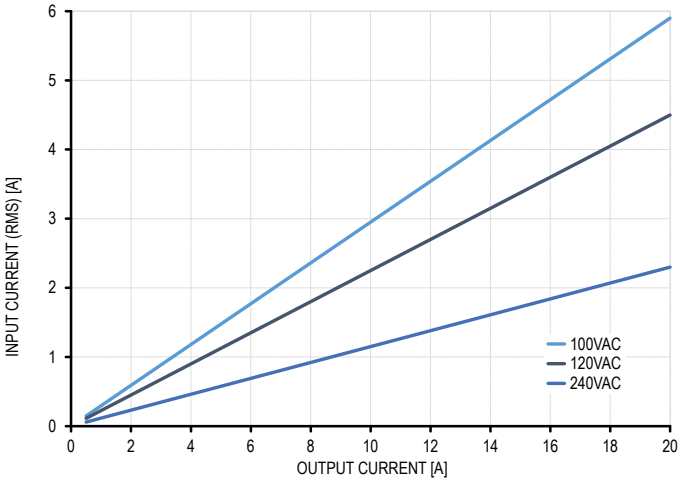

Fig. 5: Typical AC input current as a function of the output current

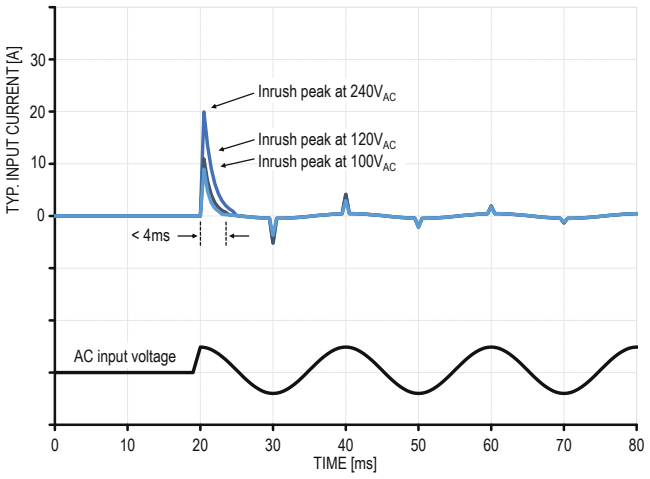

Fig. 6: Inrush current and energy during start-up phase

Unless otherwise stated, all values are specified in normal mounting position, at full load, nominal input and output voltages, 25°C (77°F) ambient temperature and a run-in time of 5 minutes.

4. Electrical input DC

Input voltage	*nom.* *max.*	110 .. 250V_{DC} 93 .. 300V_{DC}	external DC fuse required, see "Device protection" on page 17
Withstand voltage	*max.*	420V_{DC} / 30s	
Input current	*max.*	5.6A	
Turn-ON voltage	*typ.*	105V_{DC}	
Turn-OFF voltage	*typ.*	60V_{DC}	
Inrush current	*typ.* *typ.*	8A <15ms 15A <12ms	110V_{DC}, 25°C_{amb}, cold start 250V_{DC}, 25°C_{amb}, cold start
Inrush energy	*typ.* *typ.*	0.25A^2s 0.80A^2s	110V_{DC}, 25°C_{amb}, cold start 250V_{DC}, 25°C_{amb}, cold start

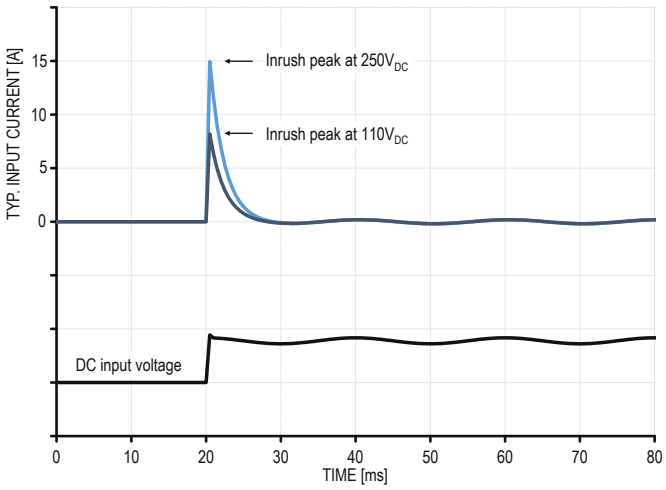

Fig. 7: DC inrush current and energy during start-up phase

5. Performance

Output power [Pout_nom]	*nom.*	480W	
Boost power [Pout_boost]	*max.*	552W / 200s	>108VAC, <55°Camb <108VAC, <45°Camb
Duty cycle	*max.*	0.038	108 .. 264VAC, 55°Camb
Power factor	*typ.*	0.95	
Active input power	*typ.* *typ.* *typ.*	521.7W 514.5W 504.7W	100VAC 120VAC 240VAC
Reactive input power	*typ.* *typ.* *typ.*	171.5Var 169.1Var 165.9Var	100VAC 120VAC 240VAC
Apparent input power	*typ.* *typ.* *typ.*	549.2VA 541.5VA 531.3VA	100VAC 120VAC 240VAC
Conversion efficiency	*typ.* *typ.* *typ.* *avg.* *avg.* *avg.*	92.0% 93.3% 95.1% 91.9% 93.0% 94.3%	100VAC, 100% Pout_nom 120VAC, 100% Pout_nom 240VAC, 100% Pout_nom 100VAC, 25 .. 100% Pout_nom 120VAC, 25 .. 100% Pout_nom 240VAC, 25 .. 100% Pout_nom
Power losses	*typ.* *typ.* *typ.* *avg.* *avg.* *avg.*	41.7W 34.5W 24.7W 42.3W 36.1W 29.0W	100VAC, 100% Pout_nom 120VAC, 100% Pout_nom 240VAC, 100% Pout_nom 100VAC, 25 .. 100% Pout_nom 120VAC, 25 .. 100% Pout_nom 240VAC, 25 .. 100% Pout_nom
No-load consumption	*max.* *max.* *max.*	1.7W 1.7W 1.6W	100VAC, 0% Pout_nom 120VAC, 0% Pout_nom 240VAC, 0% Pout_nom

*Average efficiency under 25%, 50%, 75% and 100% load conditions, according to eco-design requirements of EU commission regulation 2019/1782.

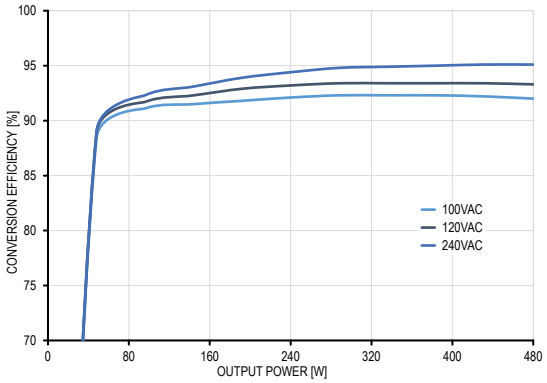

Fig. 8: Conversion efficiency as a function of the output power

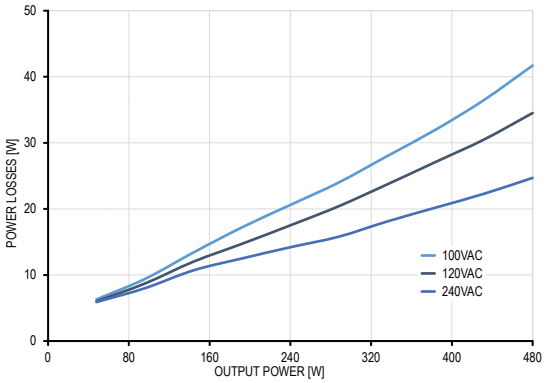

Fig. 9: Power losses as a function of the output power

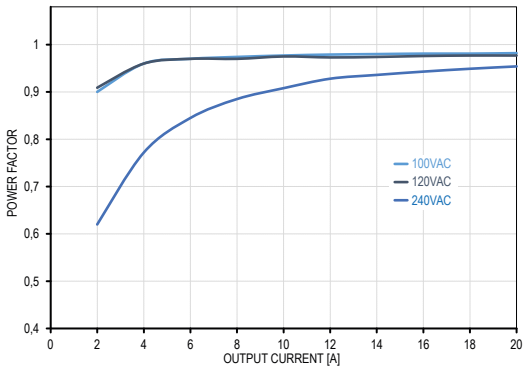

Fig. 10: Power factor as a function of the output current

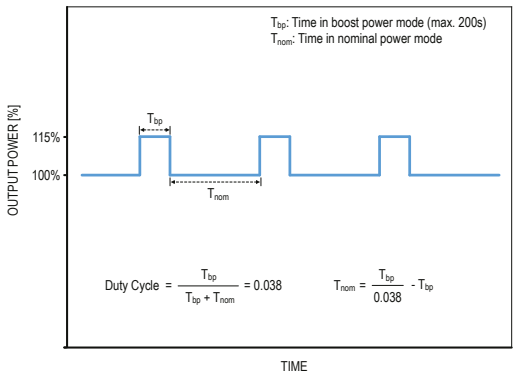

Fig. 11: Period and frequency of use of boost power at 55°Camb in normal mounting position

Unless otherwise stated, all values are specified in normal mounting position, at full load, nominal input and output voltages, 25°C (77°F) ambient temperature and a run-in time of 5 minutes.

6. Ambient conditions

Ambient operating temperature	*nom.* *nom.* *max.*	-25 .. +55°C_{amb} (-13 .. +131°F_{amb}) -25 .. +45°C_{amb} (-13 .. +113°F_{amb}) -25 .. +70°C_{amb} (-13 .. +158°F_{amb})	normal mounting position. >108V_{AC} normal mounting position. <108V_{AC}
Start-up temperature	*max.*	-40°C (-40°F)	
Ambient storage temperature	*max.*	-40 .. +85°C_{amb} (-40 .. +185°F_{amb})	
Power derating*	*min.* *min.* *min.* *min.* *min.* *min.*	12.0W/°C_{amb} (6.67W/°F_{amb}) 13.4W/°C_{amb} (8.89W/°F_{amb}) 9.6W/°C_{amb} (5.33W/°F_{amb}) 8.0W/°C_{amb} (4.44W/°F_{amb}) 9.6W/°C_{amb} (5.33W/°F_{amb}) 6.0W/°C_{amb} (3.33W/°F_{amb})	120V_{AC}, >55°C_{amb} (131°F_{amb}) 120V_{AC}, >45°C_{amb} (131°F_{amb}), 90° rotated 120V_{AC}, >50°C_{amb} (131°F_{amb}), 180° rotated 240V_{AC}, >55°C_{amb} (131°F_{amb}) 240V_{AC}, >45°C_{amb} (131°F_{amb}), 90° rotated 240V_{AC}, >50°C_{amb} (131°F_{amb}), 180° rotated
Cooling concept		Natural convection	
Relative storage humidity IEC 60068-2-30	*max.*	95%	non-condensing
Relative operation humidity IEC 60068-2-30	*max.*	95%	non-condensing
Operating altitude	*nom.* *max.*	3000mASL (9842ftASL) 6000mASL (19685ftASL)	 not UL approved, reduced OVC
Percentage power derating	*min.*	5% per 1000m (3281ft)	>3000mASL (>9842ftASL)
Temperature derating	*min.*	5K per 1000m (9K per 2181ft)	>3000mASL (>9842ftASL)
Atmospheric pressure	*nom.* *max.*	689hPa 469 .. 1070hPa	
Pollution degree		2	
Vibration sinusoidal IEC 60068-2-6		2g / 10 .. 500Hz, 1 hour/direction X,Y,Z	mounted on DIN rail
Shock test sinosoidal halfwave IEC 60068-2-27		30g / 11ms ±5ms, 3 bumps/direction, 9 bumps total	mounted on DIN rail
Audible noise		Some audible noises may be heard during no load, overload or short circuit.	

*Not actively controlled

For altitudes above 3000mASL (9842ftASL) the next lower OVC must be considered.

Flowing mixed gases
The power supplies with conformally coated PC boards have been type tested according to IEC EN 60068-2-60 - Test Ke: Flowing mixed gas corrosion test. During the inspection after the exposure, no signs of corrosion have been detected.

Salt mist
The power supplies with conformally coated PC boards have been type tested according to IEC 60068-2-11 - Test Ka: Salt mist. No functional impairments were detected after the test was carried out.

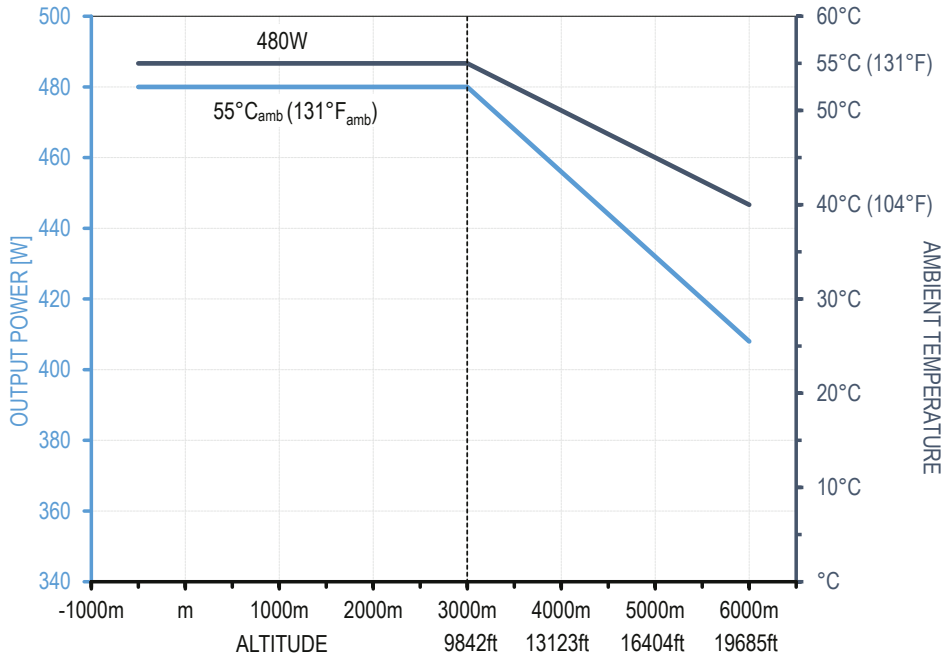

Fig. 12: Output power and ambient temperature derating at increasing altitudes

Unless otherwise stated, all values are specified in normal mounting position, at full load, nominal input and output voltages, 25°C (77°F) ambient temperature and a run-in time of 5 minutes.

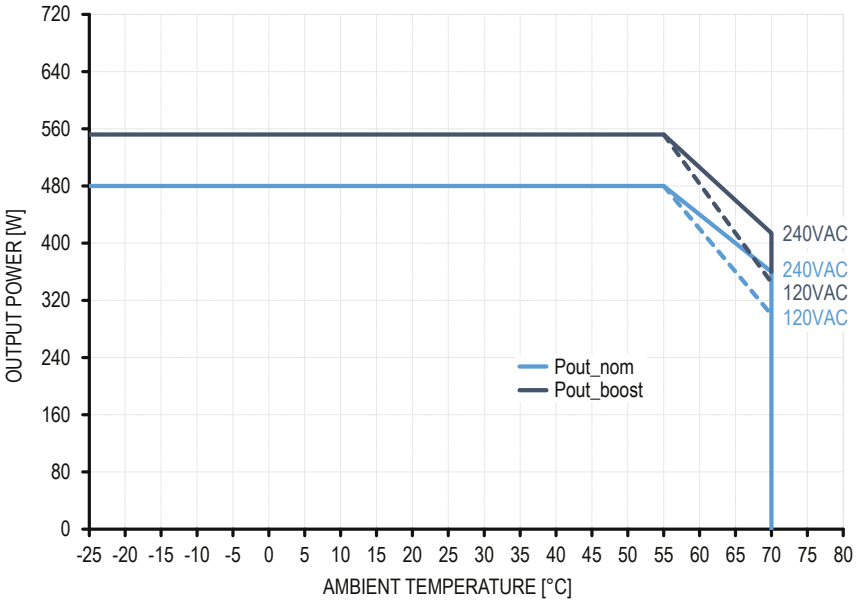

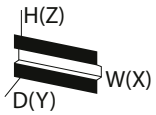

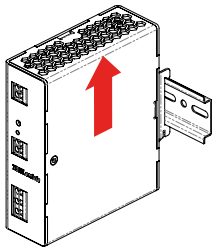

Fig. 13: Available output power as a function of the ambient temperature for nomal mounting positions

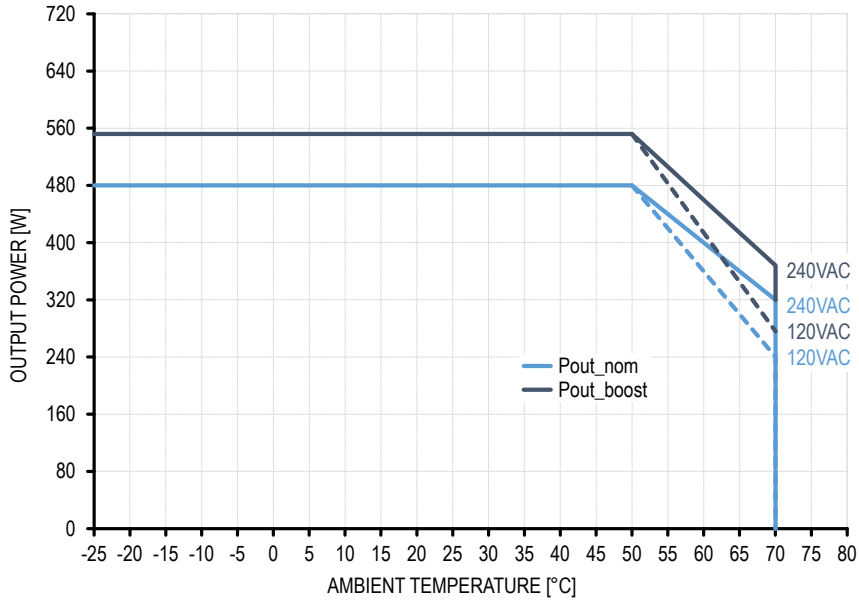

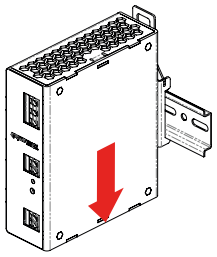

Fig. 14: Available output power as a function of the ambient temperature for 180° rotated mounting positions

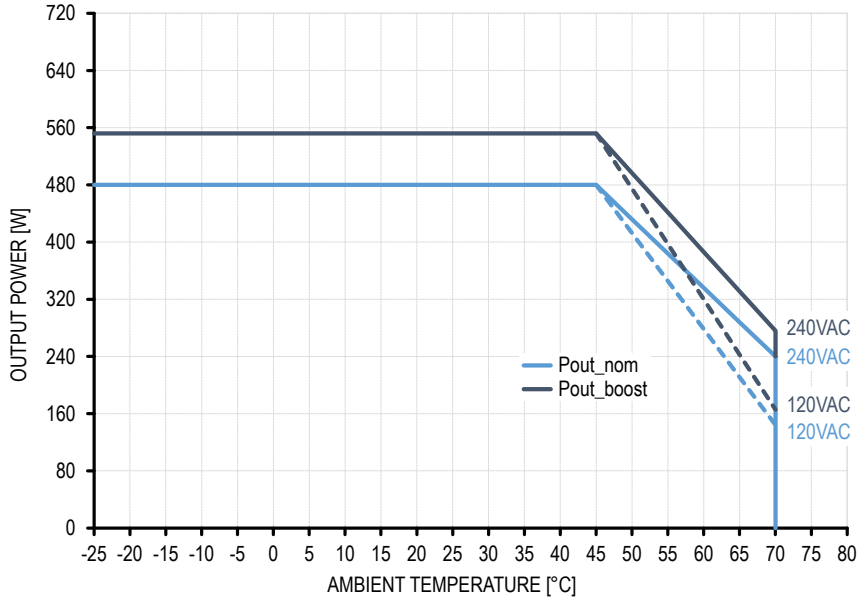

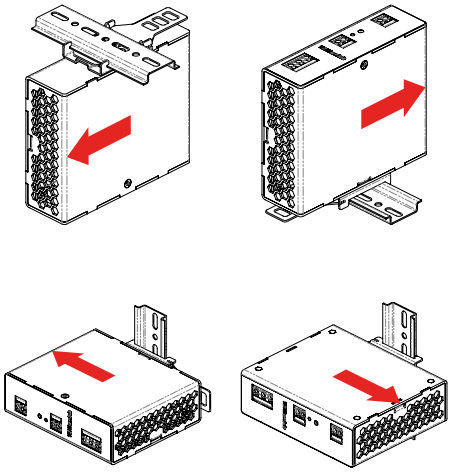

Fig. 15: Available output power as a function of the ambient temperature for 90° rotated mounting position

Unless otherwise stated, all values are specified in normal mounting position, at full load, nominal input and output voltages, 25°C (77°F) ambient temperature and a run-in time of 5 minutes.

7. Reliability and Service lifetime

The service lifetime of the power supply is determined primarily by the electrolytic capacitors utilised. The values provided herein are calculated estimates, and as such, do not represent guaranteed lifetimes. The calculation is based on the respective capacitor manufacturer's method, taking into account ripple current, operating frequency, and capacitor temperature under the herein specified operating conditions. It is important to note that, due to the theoretical nature of the calculation, all capacitor manufacturers specify a maximum expected service lifetime of 15 years.

TDK-Lambda applies strict component selection criteria and utilises electrolytic capacitors exclusively from reputable manufacturers such as Murata, Nippon Chemi-Con, Nichicon, Rubycon, and TDK.

Service lifetime	*min.*	39 000hrs	$100V_{AC}$, 100% P_{out_nom}, 40°C_{amb}, 24/7
	min.	43 000hrs	$120V_{AC}$, 100% P_{out_nom}, 40°C_{amb}, 24/7
	min.	69 000hrs	$240V_{AC}$, 100% P_{out_nom}, 40°C_{amb}, 24/7
	min.	85 000hrs	$100V_{AC}$, 75% P_{out_nom}, 40°C_{amb}, 24/7
	min.	95 000hrs	$120V_{AC}$, 75% P_{out_nom}, 40°C_{amb}, 24/7
	min.	128 000hrs	$240V_{AC}$, 75% P_{out_nom}, 40°C_{amb}, 24/7
	min.	112 000hrs	$100V_{AC}$, 100% P_{out_nom}, 25°C_{amb}, 24/7
	min.	122 000hrs	$120V_{AC}$, 100% P_{out_nom}, 25°C_{amb}, 24/7
	min.	131 400hrs	$240V_{AC}$, 100% P_{out_nom}, 25°C_{amb}, 24/7
Early life MTBF Telcordia SR-332 Issue 4	*min.*	0.55M hrs	70°C_{amb}, 50% P_{out_nom}
	min.	1.09M hrs	40°C_{amb}, 50% P_{out_nom}
	min.	1.23M hrs	25°C_{amb}, 50% P_{out_nom}
	min.	0.39M hrs	70°C_{amb}, 100% P_{out_nom}
	min.	0.73M hrs	40°C_{amb}, 100% P_{out_nom}
	min.	0.84M hrs	25°C_{amb}, 100% P_{out_nom}
Service life MTBF Telcordia SR-332 Issue 4	*min.*	0.98M hrs	70°C_{amb}, 50% P_{out_nom}
	min.	4.38M hrs	40°C_{amb}, 50% P_{out_nom}
	min.	6.50M hrs	25°C_{amb}, 50% P_{out_nom}
	min.	0.53M hrs	70°C_{amb}, 100% P_{out_nom}
	min.	1.45M hrs	40°C_{amb}, 100% P_{out_nom}
	min.	1.93M hrs	25°C_{amb}, 100% P_{out_nom}

ⓘ The maximum service lifetime guaranteed by the eCap manufacturer is 131 400hrs (15 years). All values above are theoretically calculated.

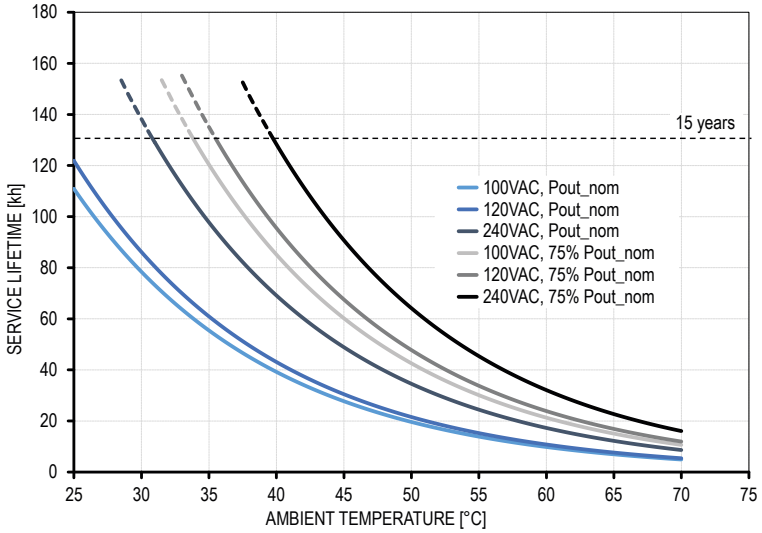

Fig. 16: Power supply service lifetime as a function of the ambient temperature

8. Dimensions & Mechanical data

Enclosure material		Aluminum	
Cover material		Aluminum	
Inflammability class UL 94		V0	incl. connection terminals
Width		60mm (20.35in)	
Height		125mm (4.92in)	
Depth		129.2mm (5.09in)	w/o DIN rail
Built-in width	*min.*	80mm (3.15in)	
Built-in height	*min.*	285mm (11.22in)	
Weight	*max.*	900g (1.98lb)	
Lever arm	*max.*	50mm (1.97in)	into the direction of Y axis
Torsional moment on DIN rail	*max.*	0.44Nm (3.91lb in)	
Enclosure openings	*max.*	7mm (0.28in)	
DIN rail types IEC 60715		TH 35-7.5, TH 35-15	

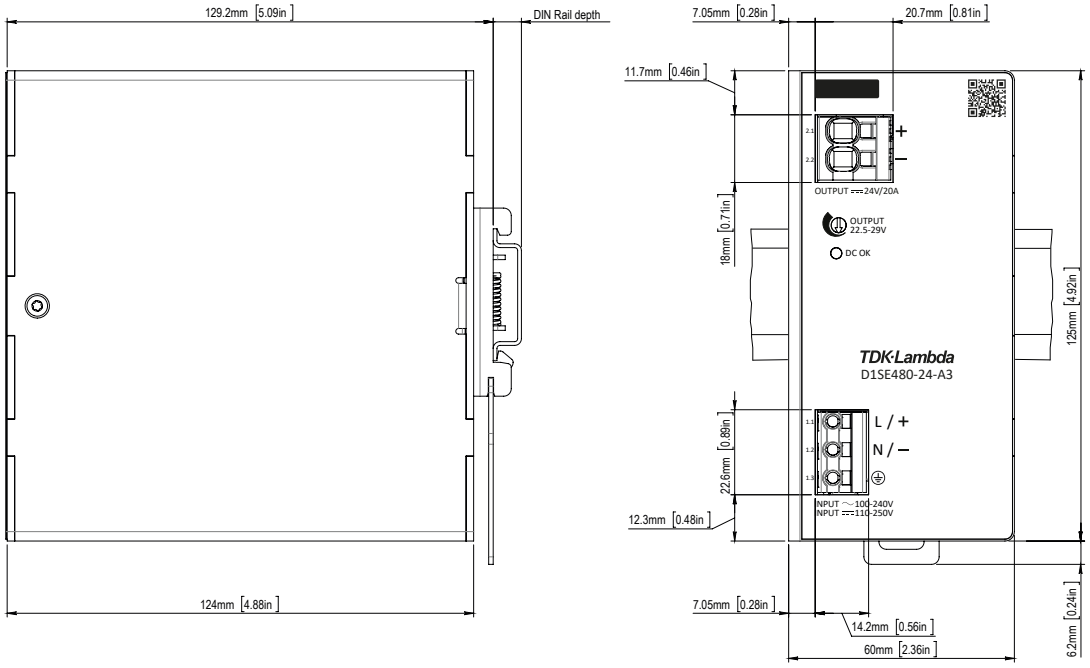

Fig. 17: Dimension drawing of D1SE480-24-A3

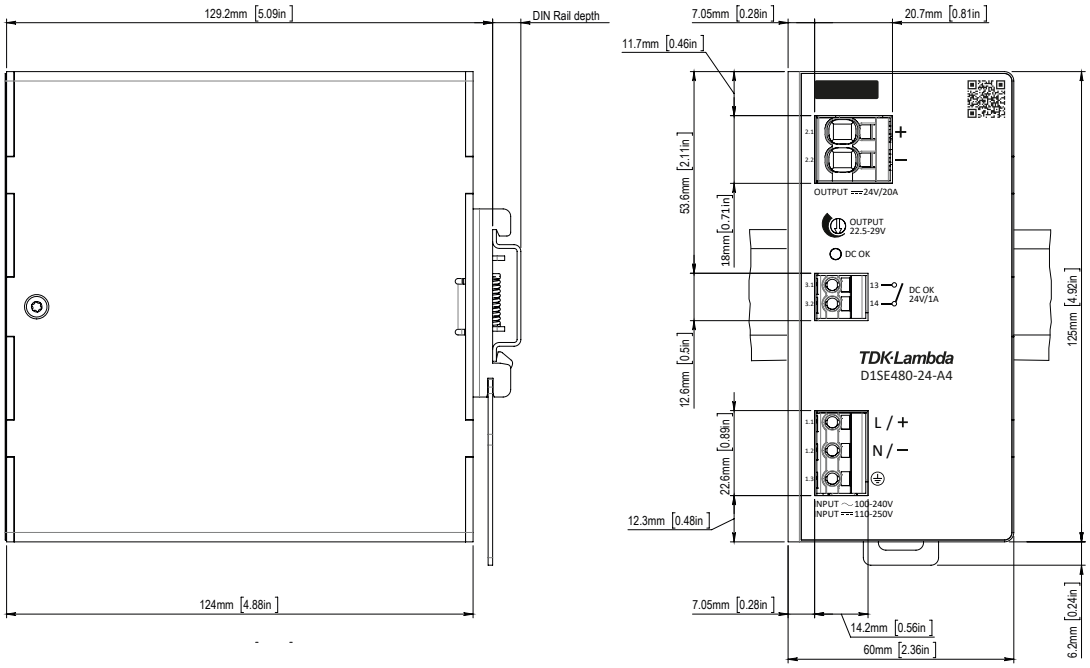

Fig. 18: Dimension drawing of D1SE480-24-A4/-A5

Unless otherwise stated, all values are specified in normal mounting position, at full load, nominal input and output voltages, 25°C (77°F) ambient temperature and a run-in time of 5 minutes.

9. Installation clearances

Vertically (Z axis)				
Top side	1	*min.*	100mm (3.94in)	
Bottom side	2	*min.*	60mm (20.35in)	installation above heat sources not permitted
Horizontally (X axis)				
Left side / Right side	3a 4a	*min.*	60mm (20.35in)	to heat sources (same power rating)
Left side / Right side	3b 4b	*min.*	10mm (0.39in)	to passive components

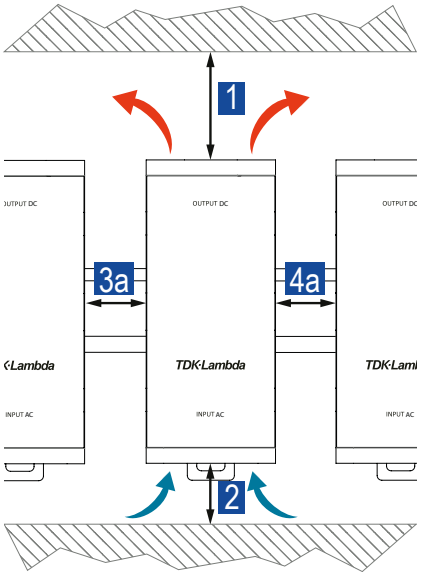

Fig. 19: Installation clearances to heat sources

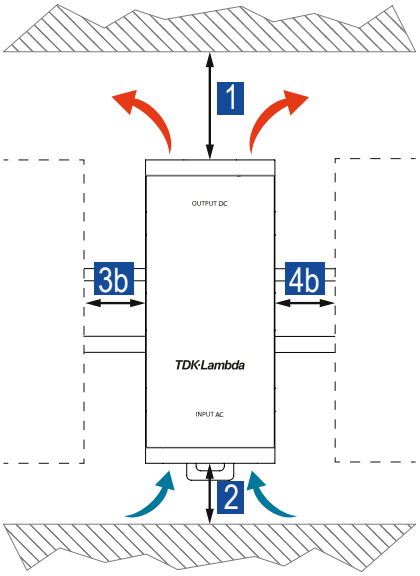

Fig. 20: Installation clearances to passive components

10. Wiring & Connection

	Input	Output	Signaling
Terminal type	Push-in	Push-in	Push-in
Recommended screw driver	SL 0.5x3.0mm (SL $^{1}/_{64}$ x $^{1}/_{8}$in)	SL 0.6x3.5mm (SL $^{1}/_{32}$ x $^{9}/_{64}$in)	SL 0.5x3.0mm (SL $^{1}/_{64}$ x $^{1}/_{8}$in)
Solid wire	0.2-4.0mm² (26-12AWG)	0.2-10.0mm² (24-8AWG)	0.2-4.0mm² (26-12AWG)
Flexible wire	0.2-2.5mm² (26-12AWG)	0.2-6.0mm² (24-8AWG)	0.2-2.5mm² (26-12AWG)
Insulated ferrules*	0.2-1.5mm²	0.25-4.0mm²	0.2-1.5mm²
Uninsulated ferrules*	0.2-2.5mm² (26-14AWG)	0.25-6.0mm² (24-10AWG)	0.2-2.5mm² (26-14AWG)
Stripping length	9-10mm (0.35 - 0.39in)	15mm (10.28in)	9-10mm (0.35 - 0.39in)

*The ferrules must be selected to match the stripping length.

ⓘ It is recommended that ferrules are used when working with flexible wires.

ⓘ In compliance with IEC EN/UL 61010-1, 61010-2-201 appropriate copper wires must be used that withstand operating temperatures of at least 75°C (167°F) in ambients NOT exceeding 40°C (104°F), and 90°C (194°F) in ambients exceeding 40°C (104°F).

11. Signaling & Control

DC OK

Type		Relay contact	
Characteristic		N/O	
Closing		U_{out} > 90% U_{set}	duration max. 13ms
Opening		U_{out} < 80% U_{set}	duration max. 5ms
Resistive load	*nom.*	1A	24V_{DC}
	max.	0.5A	60V_{DC}
Trigger hysteresis	*typ.*	0.6V	

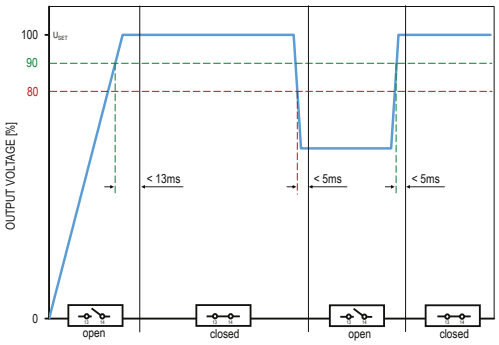

Fig. 21: DC-OK relay status in dependence of output voltage

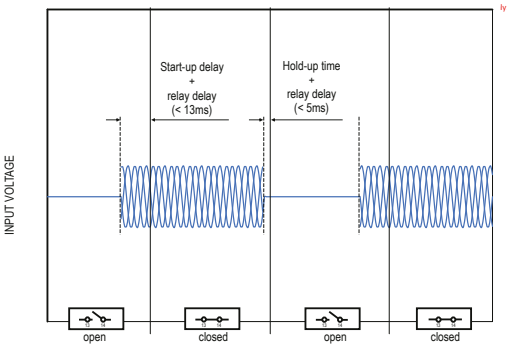

Fig. 22: DC-OK relay status in dependence of input voltage

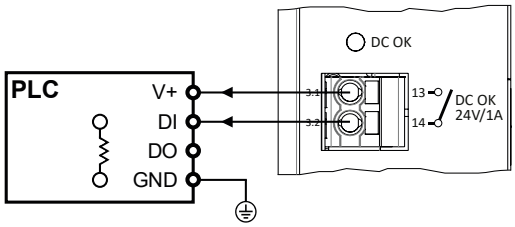

Fig. 23: Generic connection diagram of the DC OK relay contact

12. Block diagram

Active PFC	1	65kHz	
Power stage	2	114 .. 209kHz	Dependent on U_{out} and I_{out}

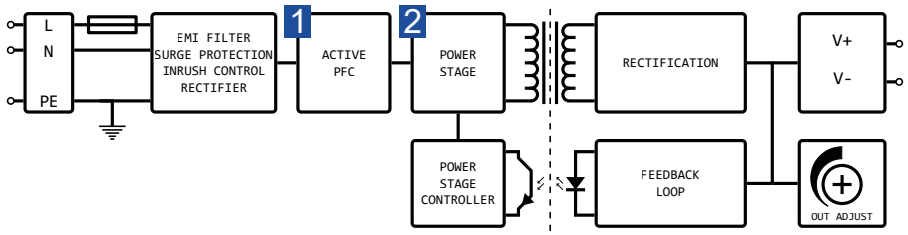

Fig. 24: Block diagram of -A3 models

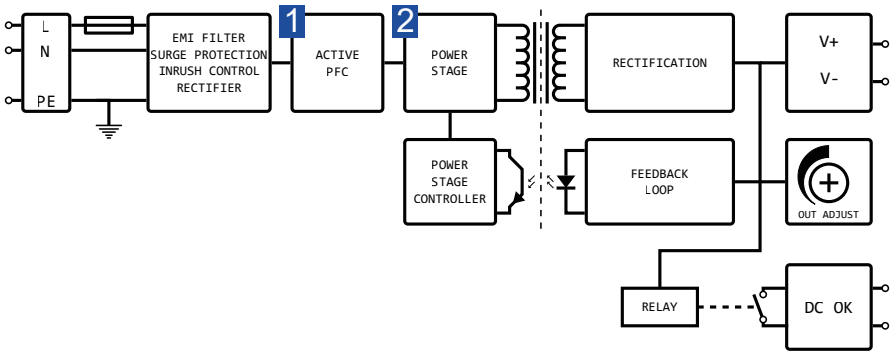

Fig. 25: Block diagram of -A4/-A5 models

Unless otherwise stated, all values are specified in normal mounting position, at full load, nominal input and output voltages, 25°C (77°F) ambient temperature and a run-in time of 5 minutes.

13. Device protection

Ingress protection degree IEC 60529		IP 20	
NEMA classification NEMA 250-2018		NEMA 1	
Conformal coating UL 746E		Humiseal 1B59LU	
Output overcurrent protection (OCP)	*min.*	23A, auto-recovery	
Output overtemperature protection (OTP)		Yes, auto-recovery	
Output overvoltage protection (OVP)	*max.*	33V_{DC}, auto-recovery	
Undervoltage protection threshold (UVP)	*max.*	75V_{AC}	
Integrated input fuse		8A at L pin	not DC capable, not user replaceable
Recommended DC fuse UL 248-1, UL 248-4		8A	
Recommended MCB types IEC 60898-1, UL 1077		B or C characteristic, 6/8/10A	
Transient protection		MOV	

ⓘ When installed in an end-product, the maximum branch circuit rating must not exceed 20A (IEC UL 62368-1 Ed.3). If the upstream supply provides a higher ampacity than 20A, an external protection device is required.

14. Electrical Safety

Class of protection IEC 61140		I	PE connection required
Electrical energy source classification IEC 62368-1		ES1	
Safety Extra Low Voltage IEC 61010-2-201, IEC 60950-1		SELV	
Protective Extra Low Voltage IEC 60204-1		PELV	Output must be earthed in the end application
Protective ground resistance	*max.*	42mΩ	
Ground leakage current IEC 60990	*max.* *max.*	0.69mA 0.82mA	TN/TT mains, 240V_{AC}, 50Hz TN/TT mains, 240V_{AC}, 60Hz
Touch current IEC 60990	*max.* *max.*	4µA 4µA	TN/TT mains, 240V_{AC}, 50Hz TN/TT mains, 240V_{AC}, 60Hz
Overvoltage category IEC 61010-1, IEC 62368-1 (Ed.3)		II	<3000mASL (<9842ftASL)

14.1 Overvoltage category design

Underlying IEC standard	61010-1	62368-1[1]	60950-1	61558-2-16[2]	62477-1	61204-7	60664-1
Mains transient voltage	II	II	III	II	III	III	III
Creepage & Clearance	III	II	III	II	III	III	III

[1] Edition 3

[2] not applicable along with IEC 61204-7

14.2 Insulation strength

		Type test (60s) IEC 62368-1 IEC 61010-1	Routine test (3s) IEC 61010-1	Field test (3s)
Input / Output	A	5000VDC	4000VDC	4000VDC
Input / PE	B	3100VDC	3100VDC	3100VDC
Input / DC OK	C	3000VAC		4000VDC
Output / PE	D		750VDC	750VDC
Output / DC OK	E	860VAC		750VDC

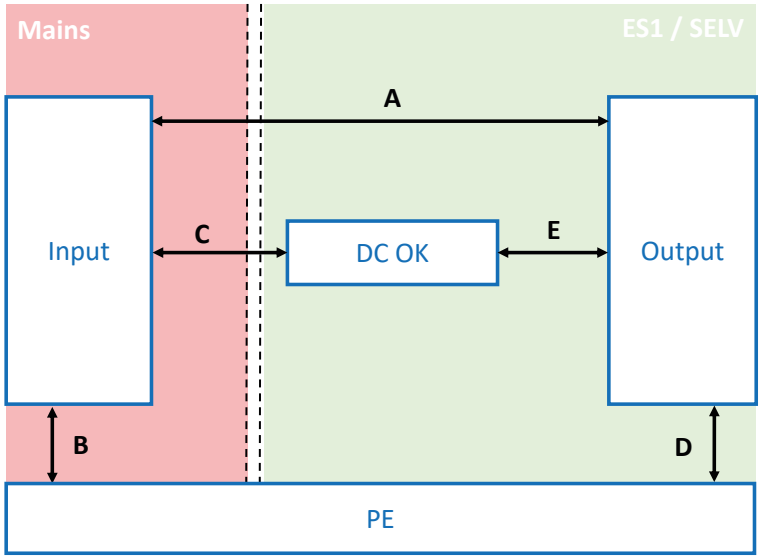

Fig. 26: Schematic of the insulation paths

14.3 HIPOT test

Apart from routine and type test, the end user might need to check the insulation strength during the final inspection and testing to guarantee the electrical safety of the end application. Therefore, a high potential test (HIPOT test) can be performed in the field. The following conditions must be observed:

- As every HIPOT test causes stress on the power supplies safety insulation, avoid frequent HIPOT testing or excessive test voltages
- The test voltages and durations, as indicated under „14.2 Insulation strength“ on page 18, must not be exceeded
- The test voltages rise and fall time should be between 2 and 4 seconds

According to EN 60204-1 (Safety of machinery - Electrical equipment of machines), an individual HIPOT test of the power supply isn't required. During the HIPOT test of the end application, the power supply can be disconnected and only installed once the test has been completed.

15. Electromagnetic immunity

Investigated under generic standards IEC EN 61000-6-2 (2019) - Immunity for industrial environments.

Electrostatic contact discharge IEC EN 61000-4-2	4kV	Criterion A	330Ω / 150pF
Electrostatic air discharge IEC EN 61000-4-2	8kV	Criterion A	330Ω / 150pF
Electromagnetic RF field[1] IEC EN 61000-4-3	10V/m 3V/m	Criterion A Criterion A	80MHz .. 1GHz 1.4GHz .. 6GHz
Fast transients (burst) IEC EN 61000-4-4			
Input[2]	4kV	Criterion A	5kHz or 100kHz
Output	2kV	Criterion A	5kHz or 100kHz
Signal contact[2]	1kV	Criterion A	5kHz or 100kHz
Surge voltages IEC EN 61000-4-5			
Input symmetrical (L-L)[2]	2kV	Criterion A	2Ω+18µF, for Φ = 0°,90°,180°,270°
Input asymmetrical (L-PE)[2]	4kV	Criterion A	12Ω+9µF, for Φ = 0°,90°,180°,270°
Output symmetrical (L-L)	2kV	Criterion A	2Ω+18µF
Output asymmetrical (L-PE)	4kV	Criterion A	12Ω+9µF
Signal line asymmetrical (Signal-PE)	1kV	Criterion A	42Ω+0.5µF
Conducted disturbances IEC EN 61000-4-6			
Input, signal line, PE[3]	10V	Criterion A	150kHz .. 80MHz
Power frequency magnetic field IEC EN 61000-4-8	30A/m	Criterion A	50Hz, 60s each axis (x, y, z)
Voltage dips/sags and interruptions			
IEC EN 61000-4-11, 61000-4-34	500ms 200ms 20ms 5000ms	Criterion A Criterion A Criterion A Criterion C	230V_{AC} at 70%, 50Hz 230V_{AC} at 40%, 50Hz 230V_{AC} at 0%, 50Hz 230V_{AC} at 0%, 50Hz
SEMI F47-0706	1000ms 500ms 200ms 20ms	Criterion A Criterion A Criterion A Criterion A	230V_{AC} at 80%, 50Hz 230V_{AC} at 70%, 50Hz 230V_{AC} at 50%, 50Hz 230V_{AC} at 0%, 50Hz

[1] Except for the ITU broadcast frequency bands 87 .. 107MHz, 174 .. 230MHz and 470 .. 790MHz, where the level shall be 3V/m.

[2] Exceeds the requirements of the European Low Voltage Directive 2014/35/EU

[3] Except for the ITU broadcast frequency bands 47 .. 68MHz, where the level shall be 3V.

The electromagnetic immunity tests were additionally investigated under the following conditions.

Electrostatic contact discharge IEC EN 61000-4-2	8kV	Criterion A	330Ω / 150pF
Electrostatic air discharge IEC EN 61000-4-2	15kV	Criterion A	330Ω / 150pF
Electromagnetic RF field IEC EN 61000-4-3	30V/m	Criterion A	80MHz .. 1GHz
Fast transients (burst) IEC EN 61000-4-4			
Input	4kV	Criterion A	5kHz or 100kHz
Output	4kV	Criterion A	5kHz or 100kHz
Surge voltages IEC EN 61000-4-5			
Input symmetrical (L-L)	2kV	Criterion A	2Ω+18µF, for Φ = 0°,90°,180°,270°
Input asymmetrical (L-PE)	5kV	Criterion A	12Ω+9µF, for Φ = 0°,90°,180°,270°
Output symmetrical (L-L)	2kV	Criterion A	2Ω+18µF
Output asymmetrical (L-PE)	5kV	Criterion A	12Ω+9µF
Conducted disturbances IEC EN 61000-4-6			
Input, signal line, PE	20V	Criterion A	150kHz .. 80MHz
Power frequency magnetic field IEC EN 61000-4-8	1000A/m	Criterion A	50Hz, 60s each axis (x, y, z)
Damped oscillatory magnetic field immunity IEC EN61000-4-10			
Enclosure	100A/m	Criterion A	40/s at 0.1MHz and 400/s at 1MHz each axis (x, y, z)
Damped oscillatory wave immunity IEC EN61000-4-18			
Input (L-L)	100A/m	Criterion A	±1kV open circuit, 40/s at 100kHz and 400/s at 1MHz, 2s burst duration
Input (L-PE)	100A/m	Criterion A	±2.5kV open circuit, 40/s at 100kHz and 400/s at 1MHz, 2s burst duration

Performance level definitions:

Criterion A:
The device continues operation as intended during and after the test. The specified performance level accepts a change of ±10% on nominal output voltage and current. There is neither a violation of the performance level, nor a loss of function if the device is used as intended.

Criterion B:
The device continues operation as intended after the test. The specified performance level accepts a change of ±10% on nominal output voltage and current. There is neither a violation of the performance level, nor a loss of function if the device is used as intended. During the test a violation of the performance level is allowed.

Criterion C:
A temporary loss of function is allowed, provided the function is auto-recoverable, or can be restored by the operation of the controls.

16. Electromagnetic emission

Investigated under generic standards IEC EN 61000-6-3 (2021) - Emission standard for residential, commercial and light-industrial environments.

Conducted noise emission input EN 55011, CISPR 11	Class B	150kHz .. 30MHz
Radiated noise emission input EN 55011, CISPR 11	Class B	30MHz .. 1GHz
Harmonic currents input IEC EN 61000-3-2	Class A	0kHz .. 2kHz
Total harmonic distortion (THD) input IEC EN 61000-3-2	16.7%	Order 1..40
Voltage changes, voltage fluctuations and flicker input IEC EN 61000-3-3	PASS	50Hz

17. Certifications & Approvals

c UL us LISTED	UL 61010-1 CAN/CSA-C22.2 No. 61010-1	Safety requirements for electrical equipment for measurement, control, and laboratory use - Part 1: General requirements
	UL 61010-2-201 CAN/CSA-C22.2 No. 61010-2-201	Safety requirements for electrical equipment for measurement, control, and laboratory use - Part 2-201: Particular requirements for control equipment UL file: E356563
IECEE CB SCHEME	IEC EN 61010-1	Safety requirements for electrical equipment for measurement, control, and laboratory use - Part 1: General requirements
	IEC EN 61010-2-201	Safety requirements for electrical equipment for measurement, control, and laboratory use - Part 2-201: Particular requirements for control equipment
	IEC EN 62368-1 (Ed.3)	Audio/video, information and communication technology equipment - Part 1: Safety requirements
c UL us	UL 62368-1 (Ed. 3)	Audio/video, information and communication technology equipment - Part 1: Safety requirements UL file: E511889
	IS 13252-1	Information technology equipment - Safety - Part 1: General requirements Reg. ID: R-41185469

18. Designed to meet

The safety design of the product complies additionally with the following standards.

UL 508	Industrial Control Equipment
IEC 60950-1	Information technology equipment - Safety - Part 1: General requirements
IEC EN 62477-1	Safety requirements for power electronic converter systems and equipment - Part 1: General
IEC EN 61204-3	Low-voltage switch mode power supplies - Part 3: Electromagnetic compatibility
IEC EN 61204-7	Low-voltage switch mode power supplies - Part 7: Safety requirements
IEC EN 61558-2-16	Safety of transformers, reactors, power supply units and similar products for supply voltages up to 1100 V - Part 2-16: Particular requirements and tests for switch mode power supply units and transformers for switch mode power supply units
EN 60204-1	Safety of machinery - Electrical equipment of machines - Part 1: General requirements
IEC EN 60068-2-60	Test Ke: Flowing mixed gas corrosion test
IEC 60068-2-11	Test Ka: Salt mist

19. Compliance & Registration

Conformity with health, safety, and environmental protection standards for products sold within the European Economic Area (EEA).

UKCA (UK Conformity Assessed) is the product marking that is used for certain goods being placed on the United Kingdom market.

The Waste Electrical and Electronic Equipment Directive (WEEE Directive) is the European Community Directive 2012/19/EU on collection, recycling and recovery targets for all types of electrical goods.

The Restriction of Hazardous Substances Directive 2011/65/EU (RoHS 2) regulates the use of certain hazardous substances in electrical and electronic equipment.

Registration, Evaluation, Authorisation and Restriction of Chemicals (REACH) is a European Union regulation that addresses the production and use of chemical substances, and their potential impacts on both human health and the environment.

20. Application notes

20.1 Parallel operation

The power supplies do not offer a parallel mode for load sharing. Paralleling power supplies to increase power is not recommended.

A 1+1 redundant system can be built by connecting the power supplies in parallel using a decoupling module. The products in the TDK-Lambda DRM series are recommended for this purpose. (refer to chapter "Add-ons and accessories" on page 3)

The following measures must be taken into account when setting up a 1+1 redundant system:

- Only power supplies of the same series and power rating must be paralleled
- Load wiring shall be identical in terms of length and cross section
- The output voltage of the power supplies must be set to the same value
- The output voltage of each power supply should be checked and maintained in regular intervals
- All power supplies must be operated under the same ambient conditions
- The power supplies must not be operated under any condition which requires a power derating (e.g. altitudes above 3000mASL (9842ftASL), temperatures above 55°C_{amb} (131°F_{amb}), mounting orientations others than the normal mounting position, etc.)
- The increased installation distances must be taken into account when installing the power supplies side by side (see "Installation clearances" on page 15)

In parallel operations the values of output load regulation, inrush currents, EMI, harmonic and leakage currents will increase.

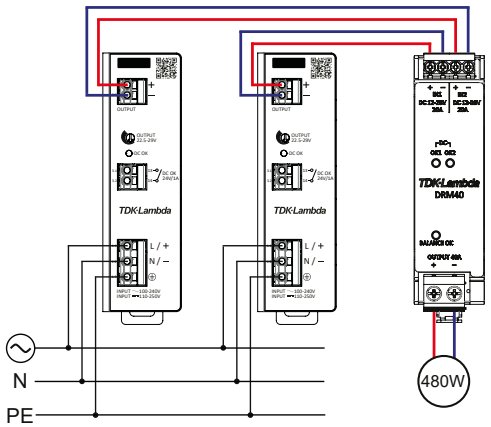

Fig. 27: Connection scheme of power supplies in parallel for the purpose of a 1+1 redundancy

20.2 Series operation

In order to increase the output voltage, it is possible to connect the power supplies in series. The following measures must be taken into account:

- The output voltage sum must not exceed 250V_{DC}
- If the output voltage sum exceeds 60V_{DC}, a safeguard against unintended touching must be considered
- Only power supplies of the same series and power rating must be connected in series
- All power supplies in series must be operated under the same ambient conditions
- The power supplies must not be operated under any condition which requires a power derating (e.g. altitudes above 3000mASL (9842ftASL), temperatures above 55°C_{amb} (131°F_{amb}), mounting orientations others than the normal mounting position, etc.)
- The increased installation clearances must be considered (refer to chapter "Installation clearances" on page 15)

ⓘ In series operations the values of output load regulation, inrush currents, EMI, harmonic and leakage currents will increase.

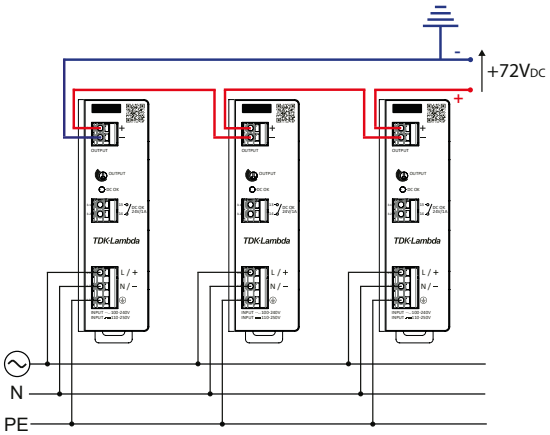

Fig. 28: Connection scheme for series operation with positive voltage level

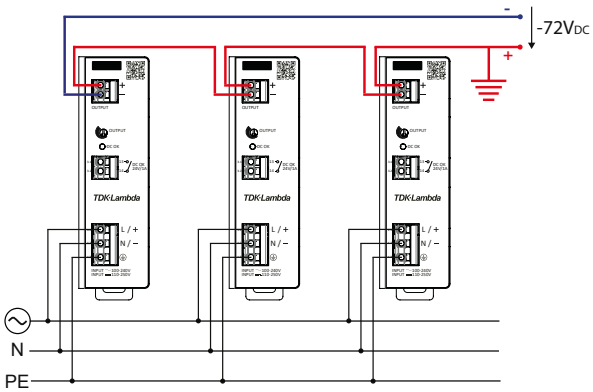

Fig. 29: Connection scheme for series operation with negative voltage level

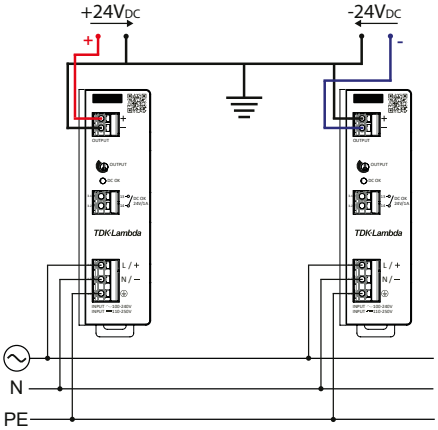

Fig. 30: Connection scheme for series operation with centre tap

TDK·Lambda



TDK-Lambda France SAS
Tel: +33 1 60 12 71 65
tlf.fr-powersolutions@tdk.com
www.emea.lambda.tdk.com/fr



Italy Sales Office
Tel +39 02 61 29 38 63
tlf.it-powersolutions@tdk.com
www.emea.lambda.tdk.com/it



Netherlands
tlf.nl-powersolutions@tdk.com
www.emea.lambda.tdk.com/nl



TDK-Lambda Europe GmbH
Tel: +49 7841 666 0
tlg.powersolutions@tdk.com
www.emea.lambda.tdk.com/de



Austria Sales Office
Tel: +43 2256 655 84
tlg.at-powersolutions@tdk.com
www.emea.lambda.tdk.com/at



Switzerland Sales Office
Tel: +41 44 850 53 53
tlg.ch-powersolutions@tdk.com
www.emea.lambda.tdk.com/ch



TDK-Lambda Europe GmbH
Tel: Tel. +45 3222 8086
tlg.dk-powersolutions@tdk.com
www.emea.lambda.tdk.com/dk



TDK-Lambda UK Ltd.
Tel: +44 (0) 12 71 85 66 66
tlu.powersolutions@tdk.com
www.emea.lambda.tdk.com/uk



TDK-Lambda Ltd.
Tel: +9 723 902 4333
tli.powersolutions@tdk.com
www.emea.lambda.tdk.com/il-en



TDK-Lambda Americas
Tel: +1 800-LAMBDA-4 or 1-800-526-2324
tla.powersolutions@tdk.com
www.us.lambda.tdk.com



TDK Electronics do Brasil Ltda
Tel: +55 11 3289-9599
sales.br@tdk-electronics.tdk.com
www.tdk-electronics.tdk.com/en



TDK-Lambda Corporation
Tel: +81-3-6778-1113
www.jp.lambda.tdk.com



TDK-Lambda (China) Electronics Co. Ltd.
Tel: +86 21 6485-0777
tlc.powersolutions@tdk.com
www.lambda.tdk.com.cn



TDK-Lambda Singapore Pte Ltd.
Tel: +65 6251 7211
tls.marketing@tdk.com
www.sg.lambda.tdk.com



TDK India Private Limited, Power Supply Division
Tel: +91 80 4039-0660
mathew.philip@tdk.com
www.sg.lambda.tdk.com

For further information please visit:
www.emea.lambda.tdk.com/d1se-series