Products NEWS

Correction Reissue

Notice of Product Code Change

OMRON

Publication date
September 24, 2026

No.2026502(ON) (2)

(Factors and Objectives)
Notice of Product Code Change
Due to Change of Country of Origin

<< REQUEST >>

There was a modification to Product News OERDARQC_PCC_260330-1 of the May 2026 issue.
Regarding the implementation timing, the description has been revised because the applicability of this change was not clearly stated in the previous version.
This change will be implemented sequentially for products manufactured from November 2026 onward.
Please note that, for a certain period, products before and after this change may be shipped concurrently after November 2026.
Please abolish the old edition and replace it with the latest.

NOTE:
This PCN is intended for use exclusively in EUROPE, Middle East and Africa.
Apply for G9KA-1A1B Model Only

■What's changed

・Power Relay　G9KA-1A1B-E

Format Specifications	Old Product Code	New Product Code
G9KA-1A1B-E DC12	G9KA0005H	G9KA1007M
G9KA-1A1B-E DC24	G9KA0006F	G9KA1008H



■Implementation period

・To be implemented sequentially for products manufactured at our plant from November 2026 production onward.

■Other changes

Before the change	After the change
Change country of origin Country of Origin: China	**Change country of origin** Country of Origin: Japan
① **Change the labeling content of the country of origin (case marking)**	① **Change the labeling content of the country of origin (case marking)**
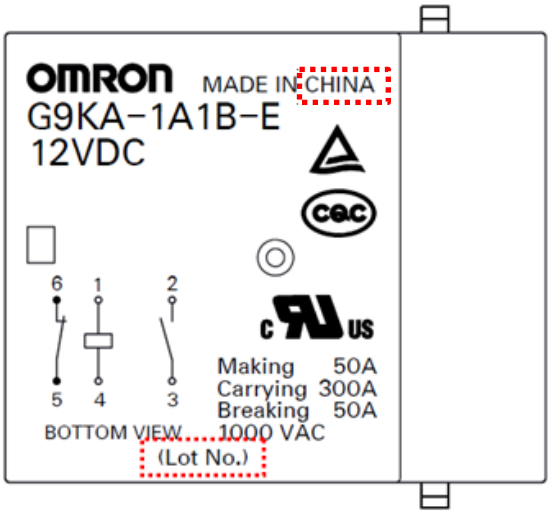	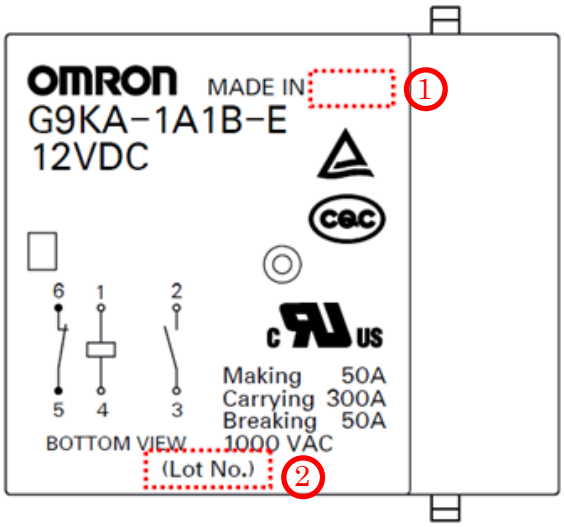
② **Change the labeling content of the country of origin (case marking)** ＊＊＊＊C□□ （＊＊＊＊：Date of manufacture、Y1：Production Plant Code）	② **Change the labeling content of the country of origin (case marking)** ＊＊＊＊＊Y1□ （＊＊＊＊＊：Date of manufacture、Y1：Production Plant Code）
③ **Change the labeling content of the country of origin (labels on individual boxes and outer boxes)** MADE IN CHINA(**Labels on the outer box**)	③ **Change the labeling content of the country of origin (labels on individual boxes and outer boxes)** MADE IN JAPAN(**Labels on the outer box**)
	

Before the change	After the change
(Labels on individual boxes)  ④ Change of display content on the outer box (factory address) 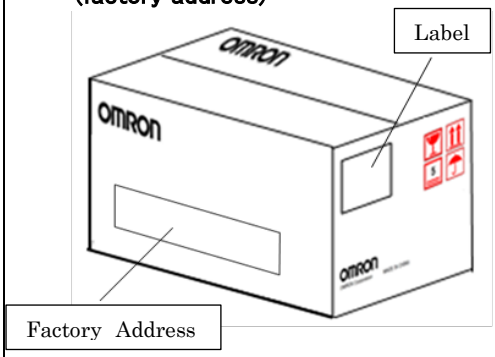 ⑤ Individual box color change: white	(Labels on individual boxes)  ④ Change of display content on the outer box (no factory address) 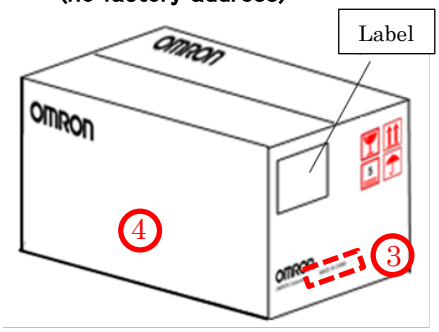 ⑤ Individual box color: brown

Specifications in this product news are as of the issue date and are subject to change without notice.
Only main changes in specifications are described in this document. Please be sure to read the relevant catalogs, datasheets, product specifications, instructions, and manuals for precautions and necessary information when using products.

Before change			After change*			*If After the change values are the same, it means the product only had technical or packing change, which does not effect the product codes!
Old part number	Old OC product code	Old ODPOS code	New part number	New OC product code	New ODPOS code	Changes are highlighted with a background colour.
G9KA-1A1B-E DC12 BY OMZ	G9KA5010A	G9KA1A1BE12DC	G9KA-1A1B-E DC12 BY OMZ	G9KA1007M	G9KA1A1BE12DC	
G9KA-1A1B-E DC24 BY OMZ	G9KA5011M	G9KA1A1BE24DC	G9KA-1A1B-E DC24 BY OMZ	G9KA1008H	G9KA1A1BE24DC	