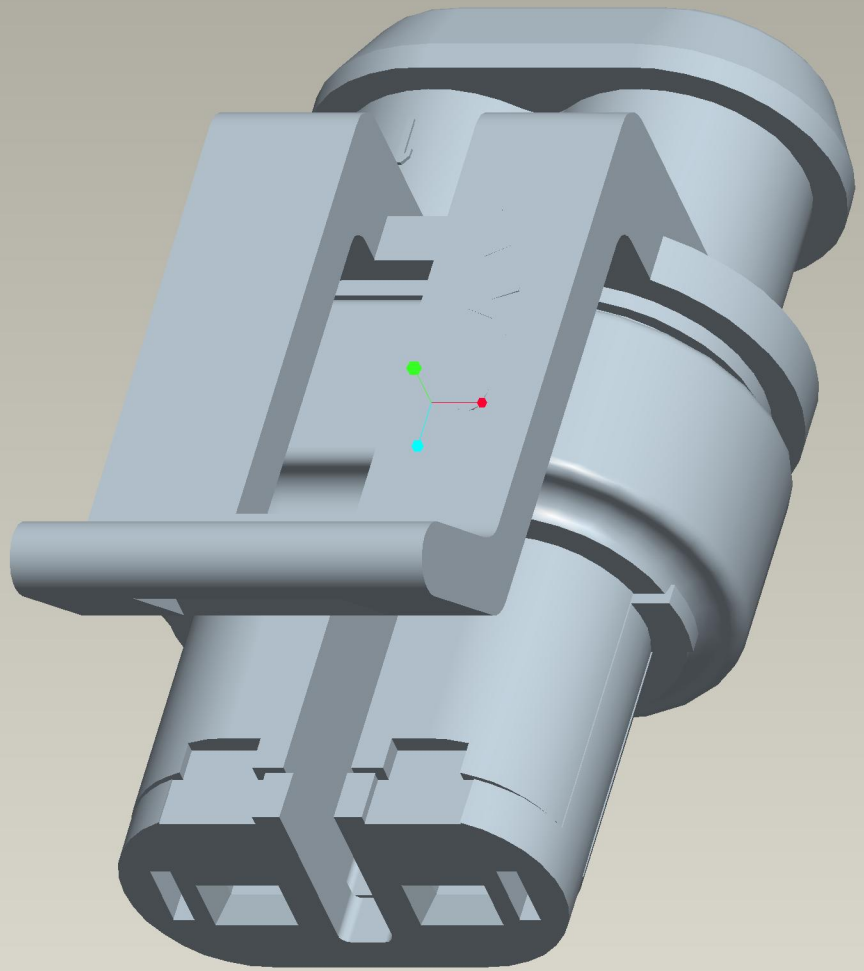

Instance:C-282080-1