Accessories

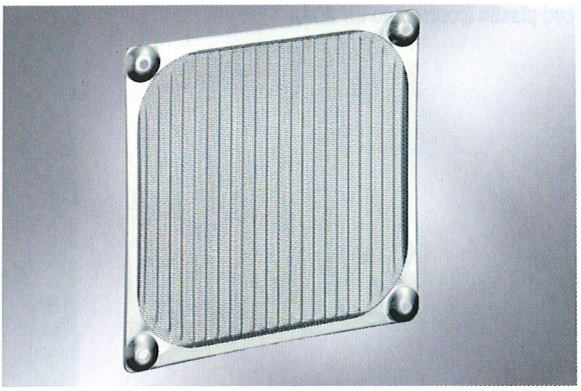

– In addition to the accessories and assembly parts listed in this catalogue, ebm-papst also supplies numerous special parts for fan operation. The sales experts at ebm-papst will be happy to assist you in your enquiries concerning fan assembly and application.

ebm-papst • St. Georgen

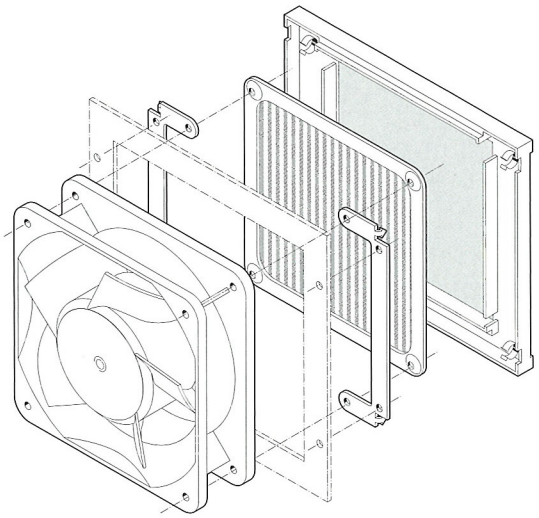
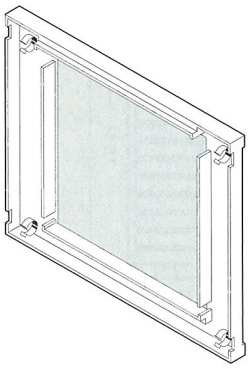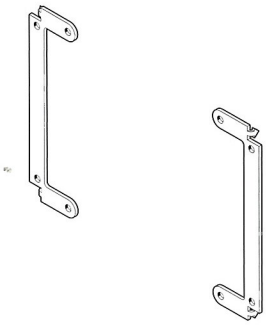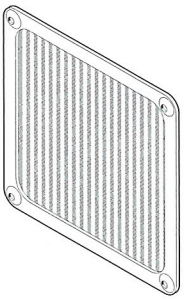
LZ40N	Screen	LZ40-1	Bracket	LZ60	Filter