GSD

1705-14

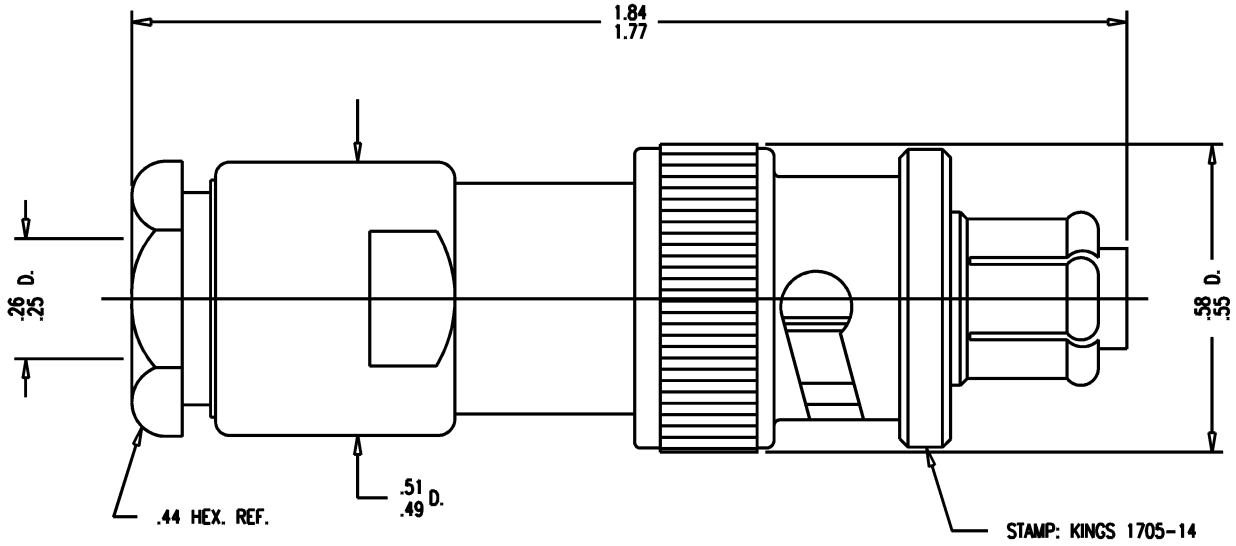

NOTES:
1. FOR USE WITH RG-59, 62 & 210/U CABLE.
2. FOR CABLING INSTRUCTIONS SEE CP-1001.3.
3. MATERIALS:
   INSULATOR-TEFLON, ASTM-D-1457
   GASKETS-SILICONE RUBBER, ZZ-R-765
   OUTER CONTACT } BER. COP., ASTM-B-196
   CENTER CONTACT } BER. COP., ASTM-B-196
   SPRING WASHER } BER. COP., ASTM-B-196
   ALL OTHER METAL PARTS-BRASS, ASTM-B16
4. FINISHES:
   SPRING WASHER- SILVER PLATE PER QQ-S-365
   CENTER CONTACTS-GOLD PLATE PER MIL-G-45204
   ALL OTHER METAL PARTS-KINGS TARNISH RESISTANT FINISH (TR-5)
5. ELECTRIAL CHARACTERISTICS:
   NOMINAL IMPEDANCE-NON-CONSTANT
   WORKING VOLTAGE-3500 VRMS

GSD

REVISIONS	
ISSUE	CHANGES

JCA3242

SCALE 4:1

APPROX SURFACE AREA

USED ON

REF:

PLUG, SHV

DRAWN	JCA	DATE	10/14/92
DESIGN	MJB	DATE	10/14/92
APPR.		DATE	

KINGS
ELECTRONICS CO., INC.
TUCKAHOE, NEW YORK 10707

1705-14