Interference Suppression Film Capacitors
MKP Radial Potted Type

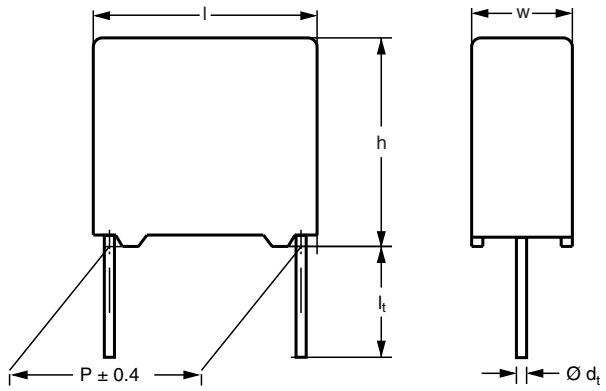

Dimensions in mm

NO FOCUS PRODUCT: USE MKP 338 6 Y2

APPLICATIONS

Y2 class

For Y2 electromagnetic interference suppression between line and ground applications (50 Hz/60 Hz) with a maximum mains voltage of 300 V_{AC}.

For application limitations refer to section “Application Notes”

REFERENCE STANDARDS

“IEC 60384-14 2nd edition and EN 132400”
“IEC 60065 requires, pass. flamm. class B”
250 V: UL 1414; CSA-C22.2 No 1;
300 V: UL 1283; ENEC

MARKING

C-value; tolerance; rated voltage; sub-class; manufacturer’s type designation; code for dielectric material; manufacturer location; year and week

DIELECTRIC

Polypropylene film

ELECTRODES

Metallized film

CONSTRUCTION

Series and triple construction

RATED VOLTAGE

AC 300 V; 50 Hz to 60 Hz

FEATURES

- 10 mm to 15 mm lead pitch. Supplied loose in box, taped on reel
- Compliant to RoHS directive 2002/95/EC

Pb-free
e3
RoHS COMPLIANT

PERMISSIBLE DC VOLTAGE

DC 1000 V

ENCAPSULATION

Plastic case, epoxy resin sealed, flame retardant UL-class 94 V-0

CLIMATIC TESTING CLASS ACC. TO EN 60068-1

55/105/56/B

CAPACITANCE RANGE (E12 SERIES)

E12 series 0.001 µF to 0.047 µF
Preferred values acc. to E6

CAPACITANCE TOLERANCE

± 20 %; ± 10 %

LEADS

Tinned wire

MAXIMUM APPLICATION TEMPERATURE

105 °C

DETAIL SPECIFICATION

For more detailed data and test requirements contact: rfi@vishay.com

COMPOSITION OF CATALOG NUMBER

TYPE AND PITCHES	
336 6 Y2	10.0 mm
	15.0 mm

CAPACITANCE (numerically)

MULTIPLIER (nF)	
0.1	2
1	3

Example:
103 = 10 x 1 = 10 nF

BFC2	336	6X	XX	X
2222(*)	336	6X	XX	X

(*) Old ordering code

TYPE	PACKAGING	LEAD CONFIGURATION	C-TOL	PREFERRED TYPES
336 6 Y2	loose in box	lead length 3.5 mm + 1 mm/- 0.5 mm (pitch = 10 mm) or 3.5 mm ± 0.3 mm (pitch = 15 mm)	± 20 %	BFC2 336 60...
		lead length 25.0 mm ± 2.0 mm		BFC2 336 66...
				ON REQUEST
336 6 Y2	loose in box	lead length 3.5 mm + 1 mm/- 0.5 mm (pitch = 10 mm) or 3.5 mm ± 0.3 mm (pitch = 15 mm)	± 10 %	BFC2 336 61...
		lead length 25.0 mm ± 2.0 mm		BFC2 336 67...
	taped on reel (1)	H = 18.5 mm; P_0 = 12.7 mm; reel diameter 500 mm	± 20 %	BFC2 336 63...
			± 10 %	BFC2 336 64...

Note
(1) For detailed tape specification refer to Packaging Information: www.vishay.com/docs/28139/packinfo.pdf

SPECIFIC REFERENCE DATA

DESCRIPTION	VALUE
Rated AC voltage (U_{RAC})	300 V
Permissible DC voltage (U_{RDC})	1000 V
Tangent of loss angle	at 10 kHz
	≤ 10 x 10^{-4}
Rated voltage pulse slope $(dU/dt)_R$ at 420 V_{DC}	200 V/µs
R between leads, for C ≤ 0.33 µF at 100 V; 1 min	> 15 000 MΩ
R between leads and case; 100 V; 1 min	> 30 000 MΩ
Withstanding (DC) voltage (cut off current 10 mA); rise time 1000 V/s	3400 V; 1 min
Withstanding (AC) voltage between leads and case	2100 V; 1 min

MKP 336 6 GENERAL DATA

U_{RAC} = 300 V; C-tol. = ± 20 %

C (µF)	DIMENSIONS W x H x L (mm)	MASS (g) [1]	CATALOG NUMBER BFC2 336 6..... AND PACKAGING					
			LOOSE IN BOX				REEL	
			L_t = 3.5 mm + 1mm/- 0.5 mm (10 mm) or 3.5 mm ± 0.3 mm (= 15 mm)		l_t = 25.0 mm ± 2.0 mm		H = 18.5 mm; P_0 = 12.7 mm	
			Last 5 digits of catalog number	SPQ	Last 5 digits of catalog number	SPQ	Last 5 digits of catalog number	SPQ
Pitch = 10.0 mm ± 0.4 mm; d_t = 0.6 mm ± 0.06 mm								
0.001	4.0 x 10.0 x 12.5	0.6	60102	1000	66102	1250	63102	1400
0.0015			60152		66152		63152	
0.0022			60222		66222		63222	
0.0033			60332		66332		63332	
0.0047	5.0 x 11.0 x 12.5	0.82	60472		66472	1000	63472	1100
0.0068			60682		66682		63682	
Pitch = 15.0 mm ± 0.4 mm; d_t = 0.6 mm ± 0.06 mm								
0.0068	5.0 x 11.0 x 17.5	1.0	69005	1000	69009	1000	69006	1100
0.01			60103		66103		63103	
0.015	6.0 x 12.0 x 17.5	1.4	60153		66153		63153	900
Pitch = 15.0 mm ± 0.4 mm; d_t = 0.8 mm ± 0.08 mm								
0.022	7.0 x 13.5 x 17.5	1.8	60223	750	66223	500	63223	800
0.033	8.5 x 15.0 x 17.5	2.4	60333		66333		63333	650
0.047	10.0 x 16.5 x 17.5	3.0	60473	500	66473	450	63473	600

Note

[1] Weight for short lead product only

MKP 336 6 GENERAL DATA

U_{RAC} = 300 V; C-tol. = ± 10 %

C (µF)	DIMENSIONS W x H x L (mm)	MASS (g) [1]	CATALOG NUMBER BFC2 336 6..... AND PACKAGING					
			LOOSE IN BOX				REEL	
			L_t = 3.5 mm + 1 mm/- 0.5 mm (10 mm) or 3.5 mm ± 0.3 mm (= 15 mm)		l_t = 25.0 mm ± 2.0 mm		H = 18.5 mm; P_0 = 12.7 mm	
			Last 5 digits of catalog number	SPQ	Last 5 digits of catalog number	SPQ	Last 5 digits of catalog number	SPQ
Pitch = 10.0 mm ± 0.4 mm; d_t = 0.6 mm ± 0.06 mm								
0.001	4.0 x 10.0 x 12.5	0.6	61102	1000	67102	1250	64102	1400
0.0012			61122		67122		64122	
0.0015			61152		67152		64152	
0.0018			61182		67182		64182	
0.0022			61222		67222		64222	
0.0027			61272		67272		64272	
0.0033			61332		67332		64332	
0.0039			61392		67392		64392	
0.0047	5.0 x 11.0 x 12.5	1.1	61472	1000	67472	1000	64472	1100
0.0056			61562		67562		64562	
Pitch = 15.0 mm ± 0.4 mm; d_t = 0.80 mm ± 0.08 mm								
0.0056	5.0 x 11.0 x 17.5	1.0	69001	1000	69007	1000	69003	1100
0.0068			61682		67682		64682	
0.0082			61822		67822		64822	
0.01			61103		67103		64103	
0.012			61123		67123		64123	
0.015	6.0 x 12.0 x 17.5	1.4	61153	1000	67153	1000	61153	900
0.018			61183		67183		64183	
Pitch = 15.0 mm ± 0.4 mm; d_t = 0.80 mm ± 0.08 mm								
0.022	7.0 x 13.5 x 17.5	1.8	61223	750	67223	500	64223	800
0.027	8.5 x 15.0 x 17.5	2.4	61273		67273		64273	650
0.033			61333		67333		64333	
0.039	10.0 x 16.5 x 17.5	3.0	61393	500	67393	450	61393	600
0.047			61473		67473		64473	

Note

[1] Weight for short lead product only

SAFETY APPROVALS Y2	VOLTAGE	VALUE	FILE NUMBERS
EN 132400	300 V_{AC}	1 nF to 47 nF	FI 2008059
UL1414 and CSA-C 22.2 No 1 antenna coupling	250 V_{AC}	1 nF to 47 nF	E112471
UL1283	300 V_{AC}	1 nF to 47 nF	E109565
CB-Test-certificate	300 V_{AC}	1 nF to 47 nF	FI 5255 A2
The ENEC-approval together with the CB-Certificate replace all national marks of the following countries (they have already signed the ENEC-Agreement): Austria; Belgium; Czech. Republic; Denmark; Finland; France; Germany; Greece; Hungary; Ireland; Italy; Luxembourg; Netherlands; Norway; Portugal; Slovenian; Spain; Switzerland and United Kingdom.			

MOUNTING

Normal Use

The capacitors are designed for mounting on printed-circuit boards. The capacitors packed in bandoliers are designed for mounting in printed-circuit boards by means of automatic insertion machines.
For detailed tape specifications refer to Packaging Information: www.vishay.com/doc?28139

Specific Method of Mounting to Withstand Vibration and Shock

In order to withstand vibration and shock tests, it must be ensured that the stand-off pips are in good contact with the printed-circuit board:

- The capacitors shall be mechanically fixed by the leads

Space Requirements on Printed Circuit Board

The maximum space for length ($l_{max.}$), width ($w_{max.}$) and heigth ($h_{max.}$) of film capacitors to take in account on the printed circuit board is shown in the drawings.

- For products with pitch ≤ 15 mm, Δ = 0.3 mm

Eccentricity defined as in drawing. The maximum eccentricity is smaller than or equal to the lead diameter of the product concerned.

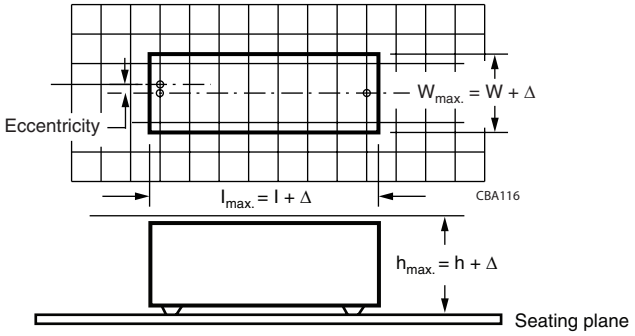

Storage Temperature

- Storage temperature: T_{stg} = - 25 °C to + 40 °C with RH maximum 80 % without condensation

Ratings and Characteristics Reference Conditions

Unless otherwise specified, all electrical values apply to an ambient temperature of 23 °C ± 1 °C, an atmospheric pressure of 86 kPa to 106 kPa and a relative humidity of 50 % ± 2 %.

For reference testing, a conditioning period shall be applied over 96 h ± 4 h by heating the products in a circulating air oven at the rated temperature and a relative humidity not exceeding 20 %.

CHARACTERISTICS

Capacitance

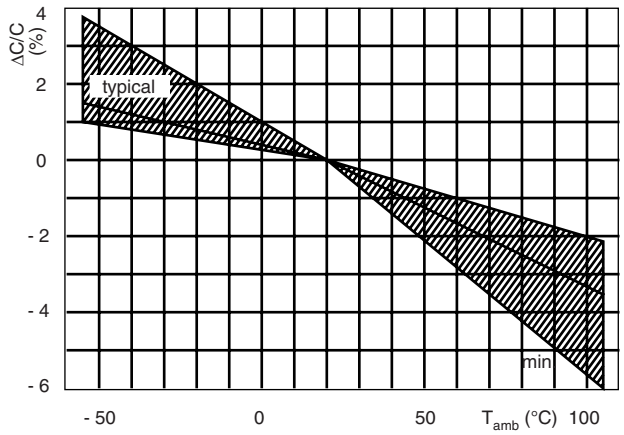

Tangent of loss angle

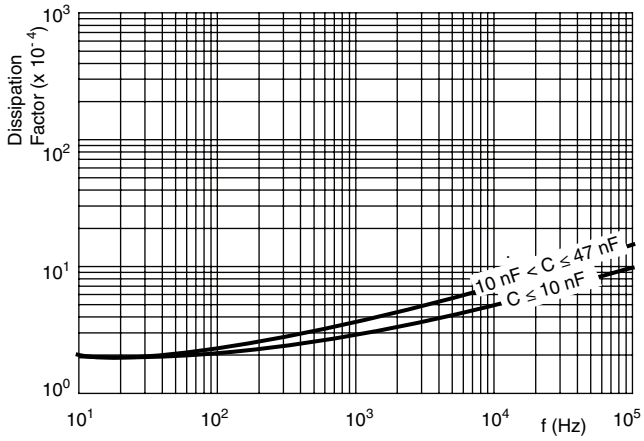

Impedance

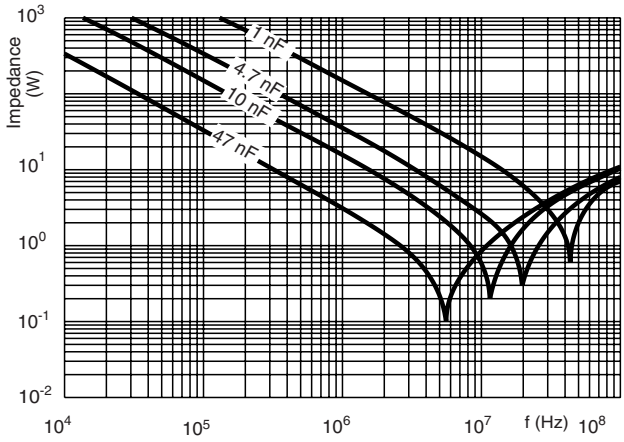

Resonant frequency

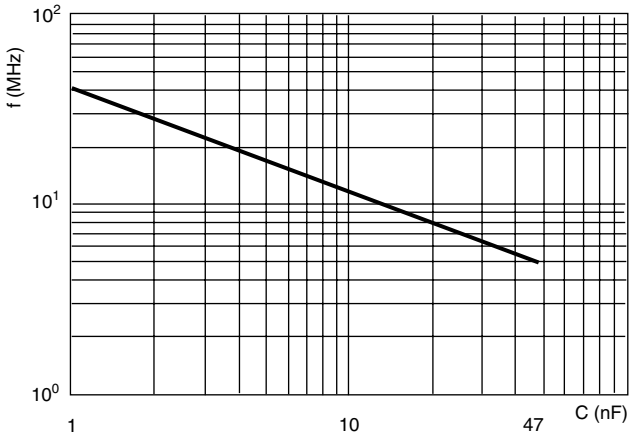

Max. RMS voltage and AC current (sinewave)

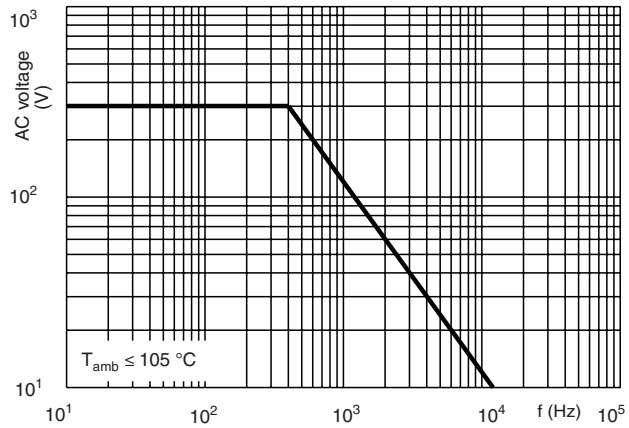

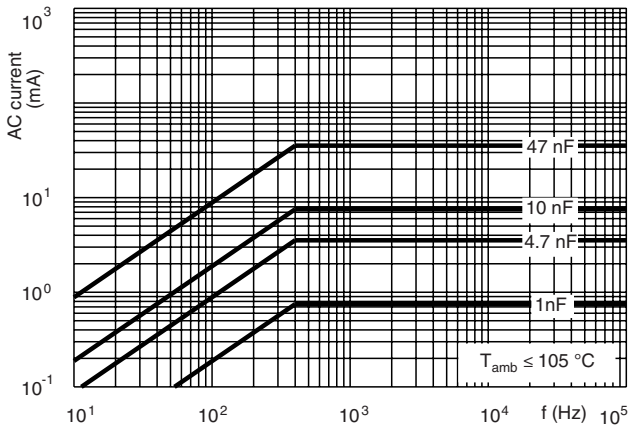

Insulation resistance

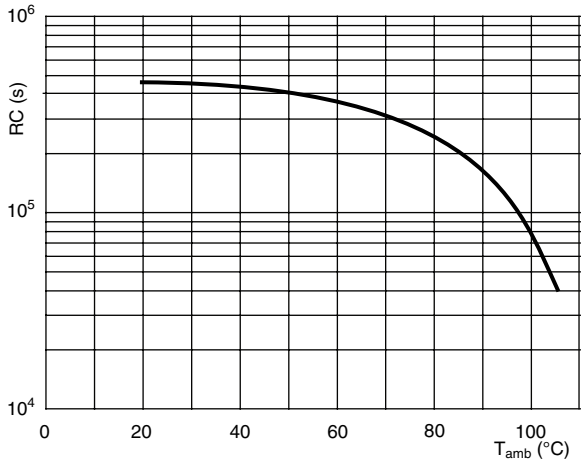

APPLICATION NOTES

- For Y2 electromagnetic interference suppression between line and ground (50 Hz/60 Hz) with a maximum mains voltage of 300 V_{AC} ± 10 % instability.
- These capacitors are not intended for continuous pulse applications. For these situations, capacitors of the AC and pulse program must be used.
- The maximum ambient temperature must not exceed 105 °C.
- Rated voltage pulse slope:
  If the pulse voltage is lower than the rated voltage, the values of the specific reference data can be multiplied by 420 V_{DC} and divided by the applied voltage.

INSPECTION REQUIREMENTS

General Notes

1. Sub-clause numbers of tests and performance requirements refer to the " Sectional Specification, IEC-publication EN 132400 (IEC 60384-14) and section one of this specification".
2. In this table: D = destructive
   ND = non destructive

Group C inspection requirements

SUB - CLAUSE NUMBER AND TEST	D OR ND	CONDITIONS	PERFORMANCE REQUIREMENTS
Group C inspection (periodic) see section "General notes" item 3			
SUB-GROUP C1A PART OF SAMPLE OF SUB-GROUP C1	**D**		
4.1 Dimensions (detail)			As specified in chapters "General data" of this specification
Initial measurements		Capacitance Tangent of loss angle at 10 kHz	
4.3 Robustness of terminations		Tensile: load 10 N; 10 s Bending: load 5 N; 4 x 90°	No visible damage
4.4 Resistance to soldering heat		No pre-drying Method: 1A Solder bath: 260 °C Duration: 10 s	
4.19 Component solvent resistance		Isopropylalcohol at room temperature Method: 2 Immersion time: 5 min ± 0.5 min Recovery time: Min. 1 h, max. 2 h	
4.4.2 Final measurements		Visual examination	No visible damage Legible marking
		Capacitance	|DC/C| ≤ 5 % of the value measured initially
		Tangent of loss angle	Increase of tan δ: ≤ 0.008 Compared to values measured initially
		Insulation resistance	As specified in section "Insulation Resistance" of this specification
SUB - GROUP C1B PART OF SAMPLE OF SUB - GROUP C1	**D**		
Initial measurements		Capacitance Tangent of loss angle at 10 kHz	
4.20 Solvent resistance of the marking: see Section "General notes"; item 5		Isopropylalcohol at room temperature Method: 1 Rubbing material: cotton wool Immersion time: 5 min ± 0.5 min	No visible damage Legible marking
4.6 Rapid change of temperature		θA = - 55 °C θB = + 105 °C 5 cycles	
4.6.1 Inspection		Duration t = 30 min	

SUB - CLAUSE NUMBER AND TEST	D OR ND	CONDITIONS	PERFORMANCE REQUIREMENTS
4.7 Vibration (see note 3)		Visual examination Mounting: see section “Mounting” of this specification Procedure B4 Frequency range: 10 Hz to 55 Hz. Amplitude: 0.75 mm or Acceleration 98 m/s² (whichever is less severe) Total duration 6 h	No visible damage
4.7.2 Final inspection		Visual examination	No visible damage
4.9 Shock (see note 3)		Mounting: see section “Mounting” for more information Pulse shape: half sine Acceleration: 490 m/s² Duration of pulse: 11 ms	
4.9.2 Final measurements		Visual examination	No visible damage
		Capacitance	|DC/C| ≤ 5 % of the value measured initially
		Tangent of loss angle	Increase of tan δ: ≤ 0.008 Compared to values measured initially
		Insulation resistance	As specified in section “Insulation Resistance” of this specification
SUB - GROUP C1 COMBINED SAMPLE OF SPECIMENS OF SUB - GROUPS C1A AND C1B	**D**		
4.11 Climatic sequence			
4.11.1 Initial measurements		Capacitance Measured in 4.4.2 and 4.9.2 Tangent of loss angle: Measured initially in C1A and C1B	
4.11.2 Dry heat		Temperature: 105 °C Duration: 16 h	
4.11.3 Damp heat cyclic Test Db First cycle			
4.11.4 Cold		Temperature: - 55 °C Duration: 2 h	
4.11.5 Damp heat cyclic Test Db remaining cycles			
4.11.6 Final measurements		Visual examination	No visible damage Legible marking
		Capacitance	|DC/C| ≤ 5 % of the value measured in 4.11.1.
		Tangent of loss angle	Increase of tan δ: ≤ 0.008 Compared to values measured in 4.11.1.
		Voltage proof 2250 V_{DC}; 1 min between term.	No permanent breakdown or flash-over
		Insulation resistance	≥ 50 % of values specified in section “Insulation resistance” of this specification

SUB - CLAUSE NUMBER AND TEST	D OR ND	CONDITIONS	PERFORMANCE REQUIREMENTS
SUB - GROUP C2	**D**		
4.12 Damp heat steady state		56 days, 40 °C, 90 % to 95 % RH no load capacitance	
4.12.1 Initial measurements		Capacitance Tangent of loss angle at 10 kHz	
4.12.3 Final measurements		Visual examination	No visible damage Legible marking
		Capacitance	|DC/C| ≤ 5 % of the value measured in 4.12.1.
		Tangent of loss angle	Increase of tan δ: ≤ 0.007 Compared to values measured in 4.12.1.
		Voltage proof 2250 V_{DC}; 1 min between term.	No permanent breakdown or flash-over
		Insulation resistance	≥ 50 % of values specified in section "Insulation resistance" of this specification
SUB- GROUP C3	**D**		
4.13.1 Initial measurements		Capacitance Tangent of loss angle at 10 kHz	
4.13 Impulse voltage		3 successive impulses, full wave, peak voltage: 5 kV Max. 24 pulses	No selfhealing breakdowns or flashover
4.14 Endurance		Duration: 1000 h 1.7 U_{RAC} at 105 °C Once in every hour the voltage is increased to 1000 V_{RMS} for 0.1 s via resistor of 47 Ω ± 5 %	
4.14.7 Final measurements		Visual examination	No visible damage Legible marking
		Capacitance	|DC/C| ≤ 10 % compared to values measured in 4.13.1.
		Tangent of loss angle	Increase of tan δ: ≤ 0.007 Compared to values measured in 4.13.1.
		Voltage proof 2250 V_{DC}; 1 minute between terminations	No permanent breakdown or flash-over
		Insulation resistance	≥ 50 % of values specified in section "Insulation resistance" of this specification

SUB - CLAUSE NUMBER AND TEST	D OR ND	CONDITIONS	PERFORMANCE REQUIREMENTS
SUB - GROUP C 4	**D**		
4.15 Charge and discharge		10 000 cycles (50 c/s) charge to UR half sinewave Duration: 5 ms Discharge resistance: $R = \frac{420\ \text{Vdc}}{1.5 \times C((dU)/(dt))}$ $R_{min.} = 2.2\ \Omega$	
4.15.1 Initial measurements		Capacitance Tangent of loss angle at 10 kHz	
4.15.3 Final measurements		Capacitance	|DC/C| ≤ 10 % compared to values measured in 4.15.1.
		Tangent of loss angle	Increase of tan δ: ≤ 0.008 Compared to values measured in 4.15.1.
		Insulation resistance	≥ 50 % of values specified in section "Insulation resistance" of this specification
SUB - GROUP C5	**D**		
4.16 Radio frequency characteristic		Resonance frequency	As specified in section "Resonant frequency" of this specification. ± 10 %
SUB - GROUP C6	**D**		
4.17 Passive flammability Class B		Bore of gas jet: Ø 0.5 mm Fuel: butane Test duration for actual volume V in mm³: V ≤ 250: 10 s 250 < V ≤ 500: 20 s 500 < V ≤ 1750: 30 s V > 1750: 60 s One flame application 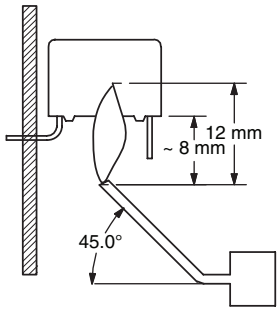	After removing test flame from capacitor, the capacitor must not continue to burn for more than 10 s. No burning particle must drop from the sample.
SUB - GROUP C7	**D**		
4.18 Active flammability		20 x 5 kV discharges on the test capacitor connected to U_R	The cheese cloth around the capacitors shall not burn with a flame. No electrical measurements are required.

Disclaimer

All product specifications and data are subject to change without notice.

Vishay Intertechnology, Inc., its affiliates, agents, and employees, and all persons acting on its or their behalf (collectively, “Vishay”), disclaim any and all liability for any errors, inaccuracies or incompleteness contained herein or in any other disclosure relating to any product.

Vishay disclaims any and all liability arising out of the use or application of any product described herein or of any information provided herein to the maximum extent permitted by law. The product specifications do not expand or otherwise modify Vishay’s terms and conditions of purchase, including but not limited to the warranty expressed therein, which apply to these products.

No license, express or implied, by estoppel or otherwise, to any intellectual property rights is granted by this document or by any conduct of Vishay.

The products shown herein are not designed for use in medical, life-saving, or life-sustaining applications unless otherwise expressly indicated. Customers using or selling Vishay products not expressly indicated for use in such applications do so entirely at their own risk and agree to fully indemnify Vishay for any damages arising or resulting from such use or sale. Please contact authorized Vishay personnel to obtain written terms and conditions regarding products designed for such applications.

Product names and markings noted herein may be trademarks of their respective owners.