CUSTOMER	C P C
PRODUCT NO.	CS14584

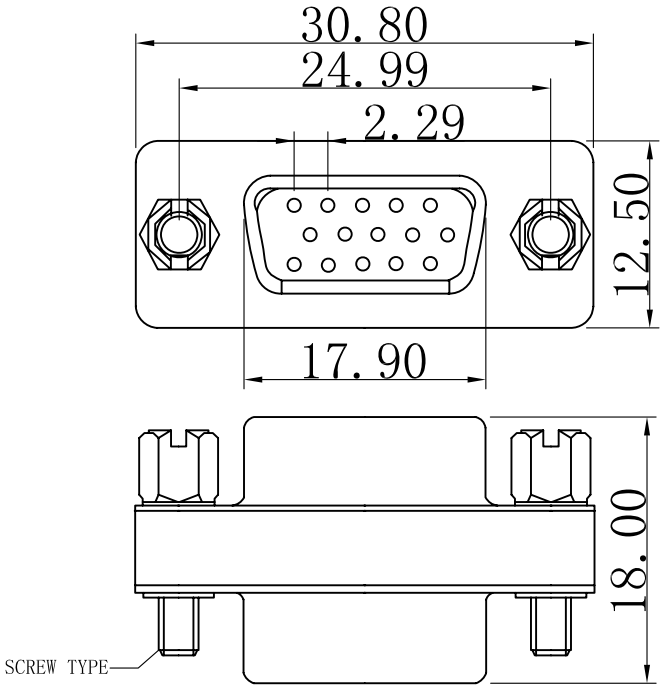

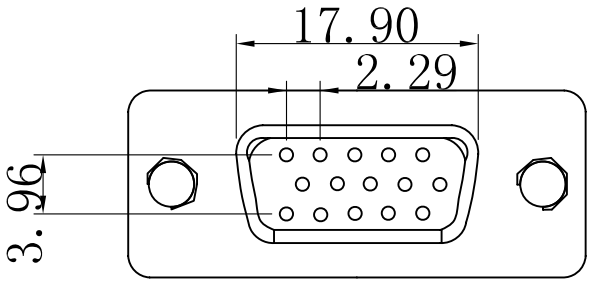

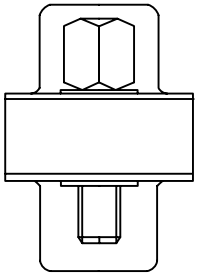

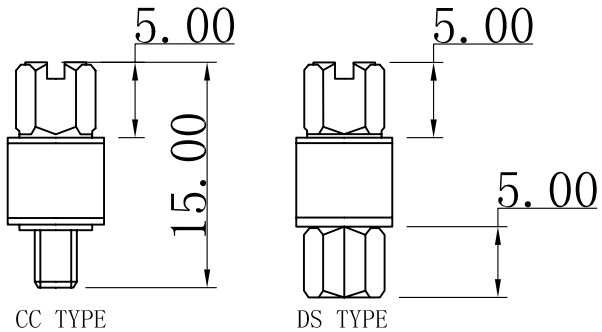

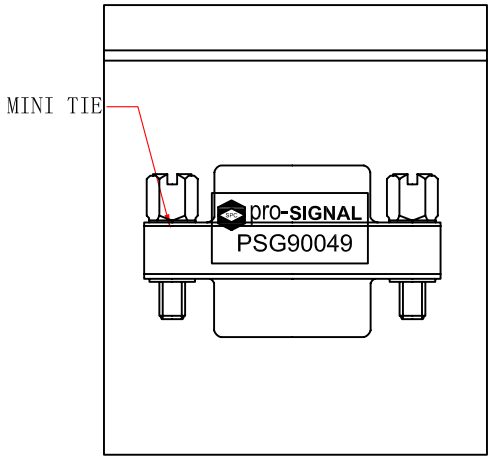

PACKING:(6)

NOTE:

1. SPECIFICATION:
   - CURRENT RATING: 1.5mA
   - INSULATION RESISTANCE: 10 MΩ MINI
   - DIELECTRIC WITHSTANDING: 500V FOR ONE MINUTR
   - CONTACT RESISTANCE: 5 Ω MAX
   - OPERATING TEMPERATURE: -20° C TO +70° C
2. MATERIALS
   - HOUSING: PBT
   - CONTACT: COPPER ALLOY
   - SHELL: STEEL - - -
3. PRODUCT NUMBER_CODE:
   DS1082 - 03 - X X X X X
4. Packing: POLYBAG Packing

DS1082 - 03 - X X X X X

- SCREW TYPE
  CC: CC TYPE
  DS: DS TYPE
- SHELL PLATING
  N: ALL NICKEL
- HOUSING COLOR
  B: BLACK
  L: BLUE
- CONTACT PLATING
  8: FULL GOLD FLASH
- CONNECTOR TYPE
  15F: 15MALE & 15MALE

REV	DESCRIPTION	DATE
00	NEW	2009/11/04

GENERAL TOLERANCES (UNLESS SPECIFIED)

LENGTH: X. ±1
.X±0.2
.XX±0.10
ANGLE: X° . ±1°
.X° ±0° 30'

HenTeK WE CARE FOR CONNECTION

NINGBO HENTEK ELECTRONICS CO.,LTD

Tel:86-574-27850905 Fax:86-574-27850906 E-mail:sales@hentek.cn

UNIT:mm	REV:00				NAME	GENDER CHANGER,D HD 15P-P
DRAWING	XIAOCAO	2009/11/04	S.P.NO.			
CHECK			P.O.NO.		DWG.NO.	
APPROVE			SIZE		PAGE	1/1