International
IOR Rectifier

PD- 91503C

IRFP150N

HEXFET® Power MOSFET

- Advanced Process Technology
- Dynamic dv/dt Rating
- 175°C Operating Temperature
- Fast Switching
- Fully Avalanche Rated

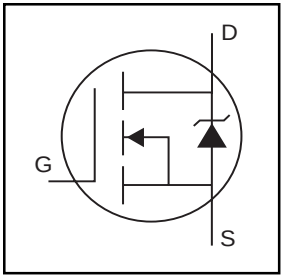

V_{DSS} = 100V

$R_{DS(on)}$ = 0.036W

I_D = 42A

Description

Fifth Generation HEXFETs from International Rectifier utilize advanced processing techniques to achieve extremely low on-resistance per silicon area. This benefit, combined with the fast switching speed and ruggedized device design that HEXFET Power MOSFETs are well known for, provides the designer with an extremely efficient and reliable device for use in a wide variety of applications.

The TO-247 package is preferred for commercial-industrial applications where higher power levels preclude the use of TO-220 devices. The TO-247 is similar but superior to the earlier TO-218 package because of its isolated mounting hole.

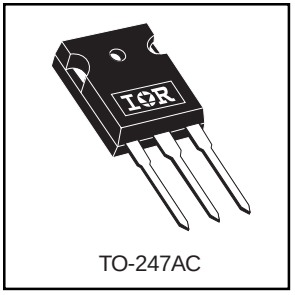

TO-247AC

Absolute Maximum Ratings

	Parameter	Max.	Units
I_D @ T_C = 25°C	Continuous Drain Current, V_{GS} @ 10V	42	A
I_D @ T_C = 100°C	Continuous Drain Current, V_{GS} @ 10V	30	
I_{DM}	Pulsed Drain Current ①⑤	140	
P_D @T_C = 25°C	Power Dissipation	160	W
	Linear Derating Factor	1.1	W/°C
V_{GS}	Gate-to-Source Voltage	± 20	V
E_{AS}	Single Pulse Avalanche Energy②⑤	420	mJ
I_{AR}	Avalanche Current①⑤	22	A
E_{AR}	Repetitive Avalanche Energy①	16	mJ
dv/dt	Peak Diode Recovery dv/dt ③⑤	5.0	V/ns
T_J	Operating Junction and	-55 to + 175	°C
T_{STG}	Storage Temperature Range		
	Soldering Temperature, for 10 seconds	300 (1.6mm from case)	
	Mounting torque, 6-32 or M3 srew	10 lbf•in (1.1N•m)	

Thermal Resistance

	Parameter	Typ.	Max.	Units
R_{qJC}	Junction-to-Case	—	0.95	°C/W
R_{qCS}	Case-to-Sink, Flat, Greased Surface	0.24	—	
R_{qJA}	Junction-to-Ambient	—	40	

Electrical Characteristics @ T_J = 25°C (unless otherwise specified)

	Parameter	Min.	Typ.	Max.	Units	Conditions
$V_{(BR)DSS}$	Drain-to-Source Breakdown Voltage	100	—	—	V	V_{GS} = 0V, I_D = 250µA
$DV_{(BR)DSS}/DT_J$	Breakdown Voltage Temp. Coefficient	—	0.11	—	V/°C	Reference to 25°C, I_D = 1mA⑤
$R_{DS(on)}$	Static Drain-to-Source On-Resistance	—	—	0.036	Ω	V_{GS} = 10V, I_D = 23A ④
$V_{GS(th)}$	Gate Threshold Voltage	2.0	—	4.0	V	V_{DS} = V_{GS}, I_D = 250µA
g_{fs}	Forward Transconductance	14	—	—	S	V_{DS} = 25V, I_D = 22A⑤
I_{DSS}	Drain-to-Source Leakage Current	—	—	25	µA	V_{DS} = 100V, V_{GS} = 0V
		—	—	250		V_{DS} = 80V, V_{GS} = 0V, T_J = 150°C
I_{GSS}	Gate-to-Source Forward Leakage	—	—	100	nA	V_{GS} = 20V
	Gate-to-Source Reverse Leakage	—	—	-100		V_{GS} = -20V
Q_g	Total Gate Charge	—	—	110	nC	I_D = 22A
Q_{gs}	Gate-to-Source Charge	—	—	15		V_{DS} = 80V
Q_{gd}	Gate-to-Drain ("Miller") Charge	—	—	58		V_{GS} = 10V, See Fig. 6 and 13 ④⑤
$t_{d(on)}$	Turn-On Delay Time	—	11	—	ns	V_{DD} = 50V
t_r	Rise Time	—	56	—		I_D = 22A
$t_{d(off)}$	Turn-Off Delay Time	—	45	—		R_G = 3.6Ω
t_f	Fall Time	—	40	—		R_D = 2.9Ω, See Fig. 10 ④⑤
L_D	Internal Drain Inductance	—	5.0	—	nH	Between lead, 6mm (0.25in.) from package and center of die contact
L_S	Internal Source Inductance	—	13	—		
C_{iss}	Input Capacitance	—	1900	—	pF	V_{GS} = 0V
C_{oss}	Output Capacitance	—	450	—		V_{DS} = 25V
C_{rss}	Reverse Transfer Capacitance	—	230	—		f = 1.0MHz, See Fig. 5⑤

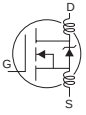

Source-Drain Ratings and Characteristics

	Parameter	Min.	Typ.	Max.	Units	Conditions
I_S	Continuous Source Current (Body Diode)	—	—	42	A	MOSFET symbol showing the integral reverse p-n junction diode.
I_{SM}	Pulsed Source Current (Body Diode) ①⑤	—	—	140		
V_{SD}	Diode Forward Voltage	—	—	1.3	V	T_J = 25°C, I_S =23A, V_{GS} = 0V ④
t_{rr}	Reverse Recovery Time	—	180	270	ns	T_J = 25°C, I_F = 22A
Q_{rr}	Reverse RecoveryCharge	—	1.2	1.8	µC	di/dt = 100A/µs ④ ⑤
t_{on}	Forward Turn-On Time	Intrinsic turn-on time is negligible (turn-on is dominated by L_S+L_D)				

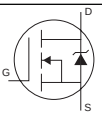

Notes:

① Repetitive rating; pulse width limited by max. junction temperature. (See fig. 11)

② Starting T_J = 25°C, L = 1.7mH
R_G = 25Ω, I_{AS} = 22A. (See Figure 12)

③ I_{SD} ≤ 22A, di/dt ≤ 180A/µs, V_{DD} ≤ $V_{(BR)DSS}$, T_J ≤ 175°C

④ Pulse width ≤ 300µs; duty cycle ≤ 2%.

⑤ Uses IRF1310N data and test conditions

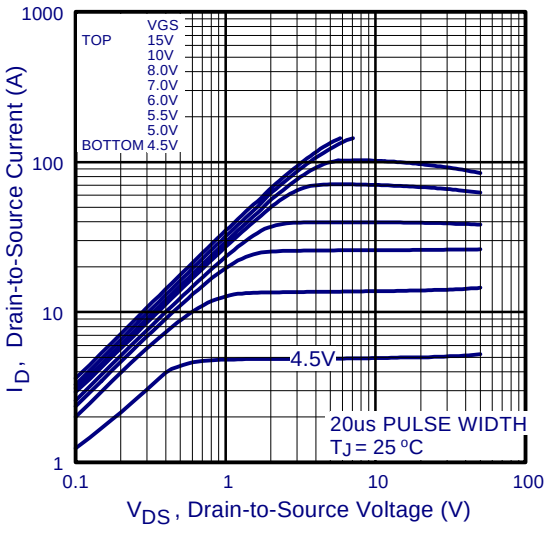

Fig 1. Typical Output Characteristics

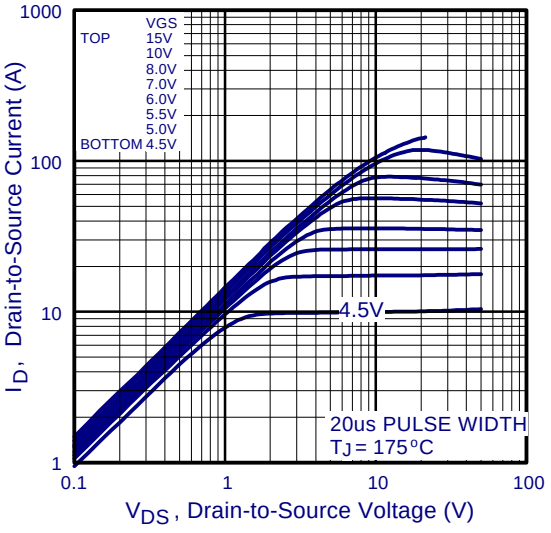

Fig 2. Typical Output Characteristics

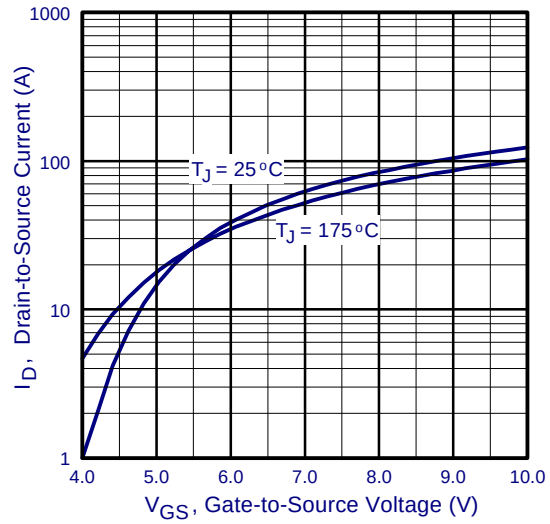

Fig 3. Typical Transfer Characteristics

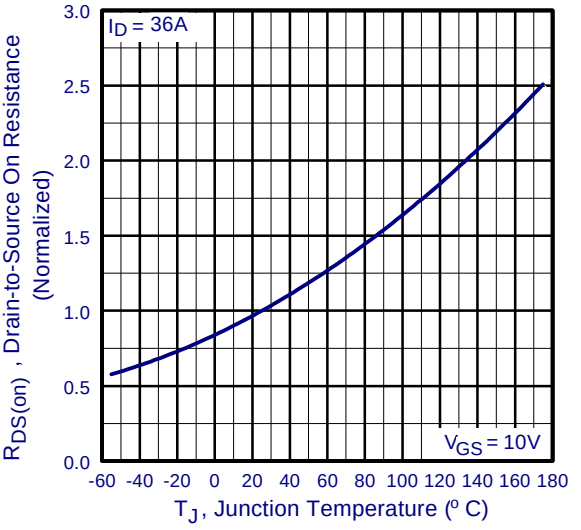

Fig 4. Normalized On-Resistance Vs. Temperature

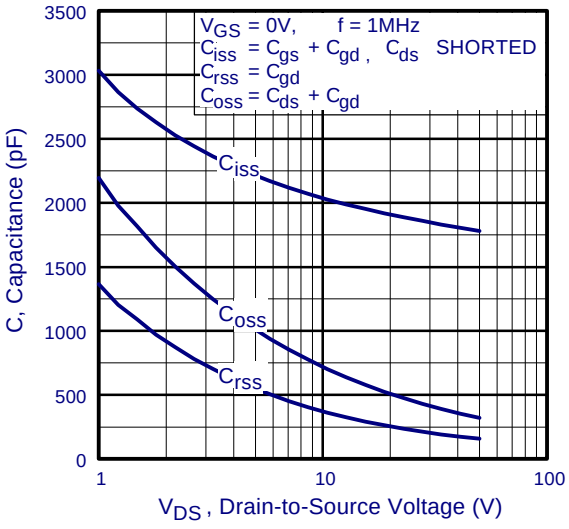

Fig 5. Typical Capacitance Vs. Drain-to-Source Voltage

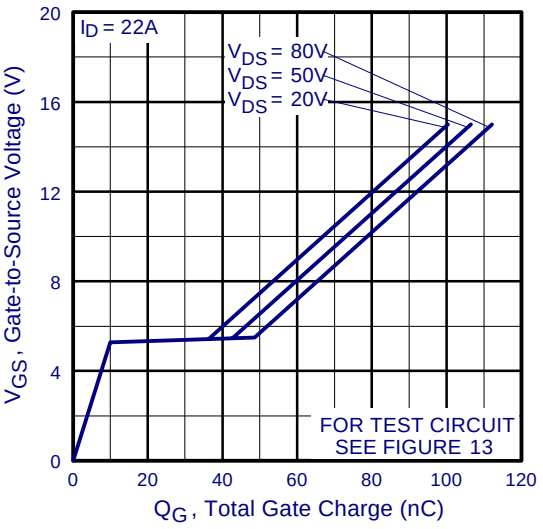

Fig 6. Typical Gate Charge Vs. Gate-to-Source Voltage

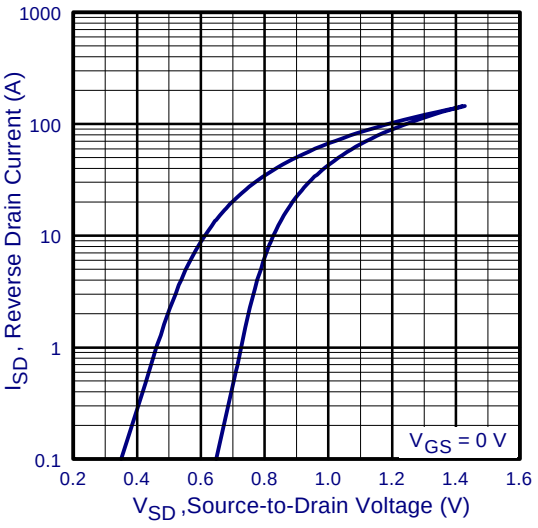

Fig 7. Typical Source-Drain Diode Forward Voltage

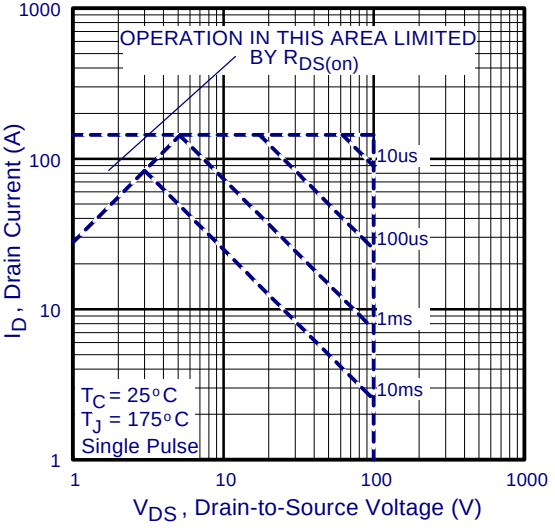

Fig 8. Maximum Safe Operating Area

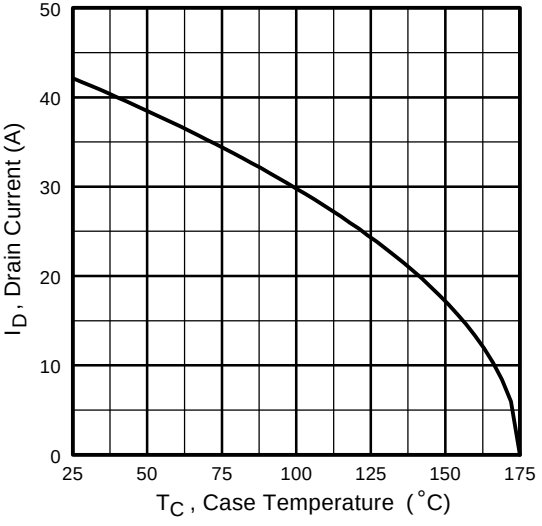

Fig 9. Maximum Drain Current Vs. Case Temperature

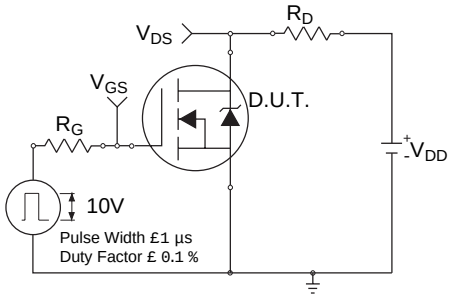

Fig 10a. Switching Time Test Circuit

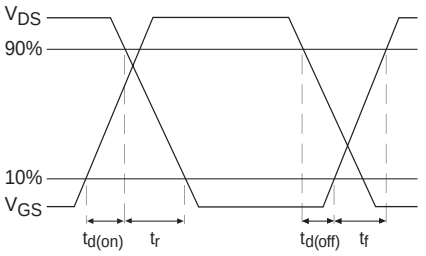

Fig 10b. Switching Time Waveforms

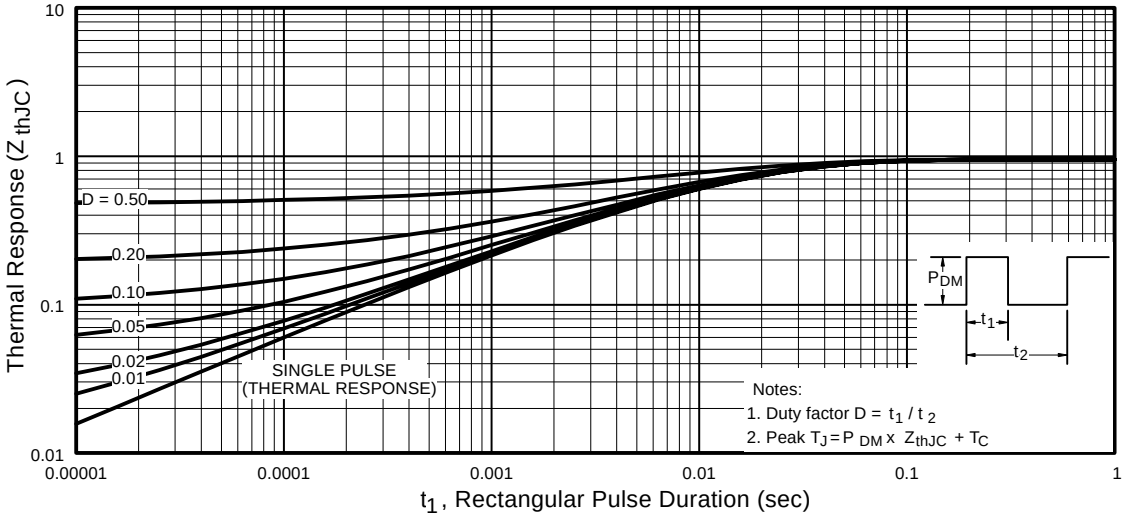

Fig 11. Maximum Effective Transient Thermal Impedance, Junction-to-Case

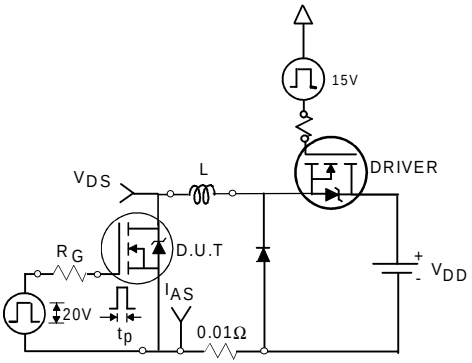

Fig 12a. Unclamped Inductive Test Circuit

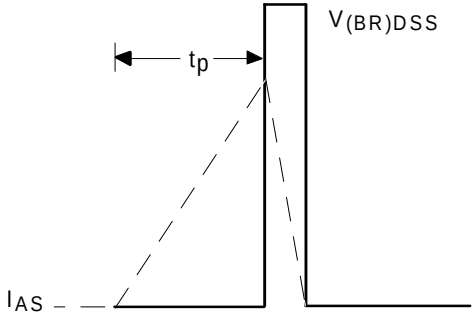

Fig 12b. Unclamped Inductive Waveforms

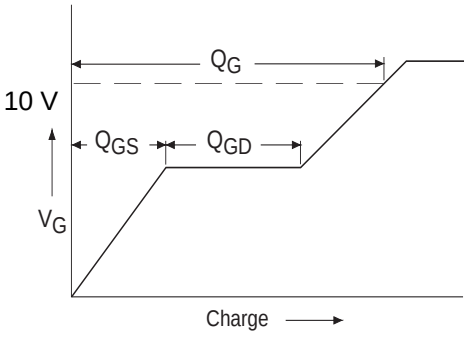

Fig 13a. Basic Gate Charge Waveform

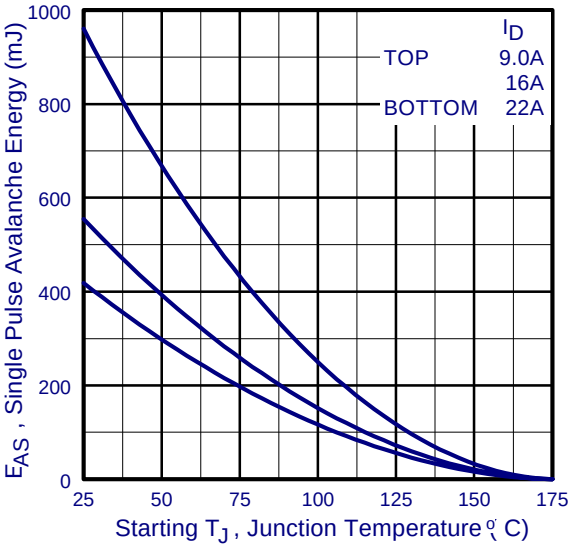

Fig 12c. Maximum Avalanche Energy Vs. Drain Current

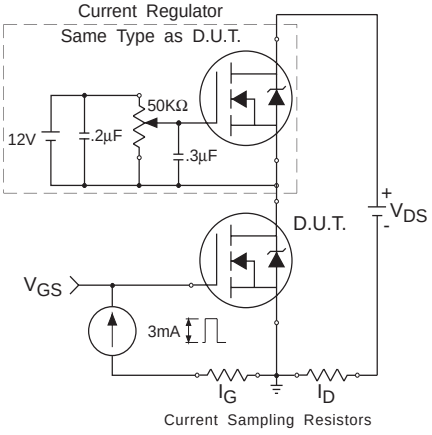

Fig 13b. Gate Charge Test Circuit

Peak Diode Recovery dv/dt Test Circuit

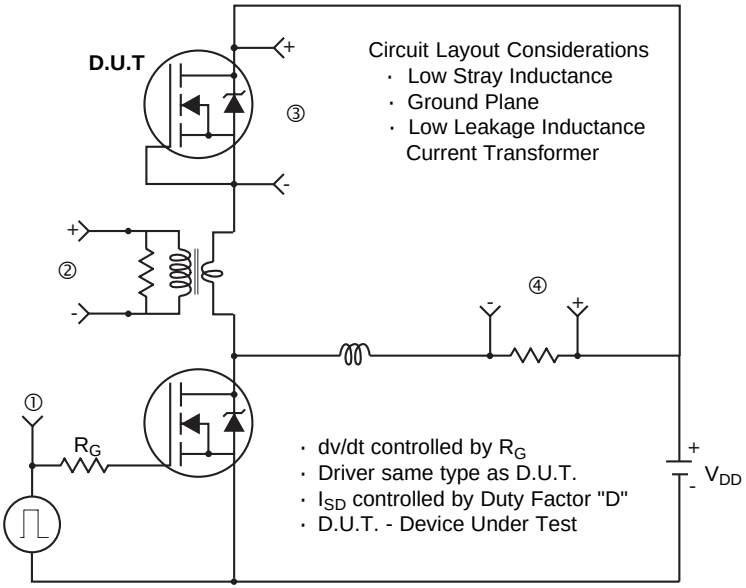

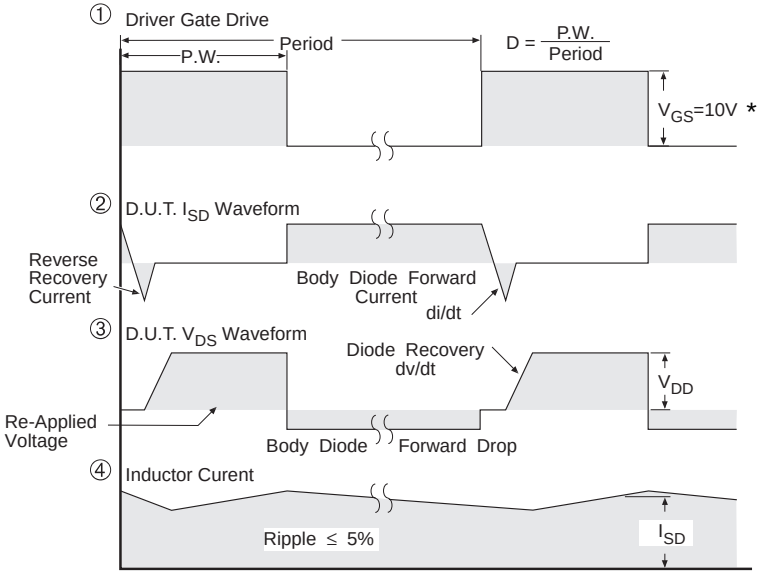

* V_{GS} = 5V for Logic Level Devices

Fig 14. For N-Channel HEXFETS

Package Outline

TO-247AC Outline

Dimensions are shown in millimeters (inches)

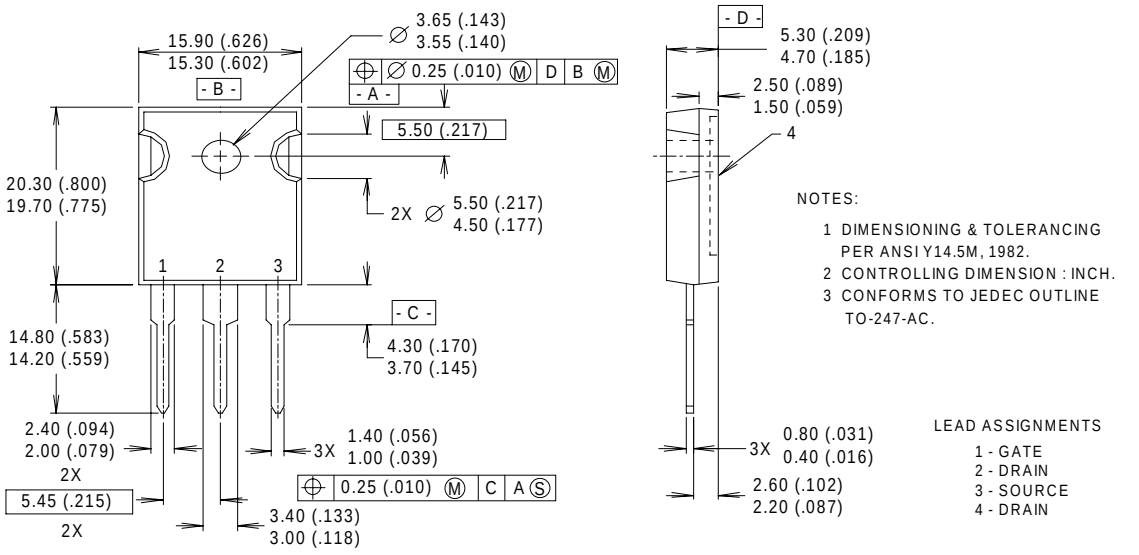

NOTES:

1 DIMENSIONING & TOLERANCING PER ANSI Y14.5M, 1982.
2 CONTROLLING DIMENSION : INCH.
3 CONFORMS TO JEDEC OUTLINE TO-247-AC.

LEAD ASSIGNMENTS

1 - GATE
2 - DRAIN
3 - SOURCE
4 - DRAIN

Part Marking Information

TO-247AC

EXAMPLE : THIS IS AN IRFPE30
WITH ASSEMBLY
LOT CODE 3A1Q

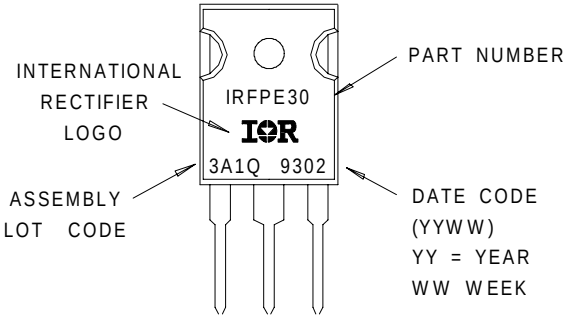

International
IOR Rectifier

WORLD HEADQUARTERS: 233 Kansas St., El Segundo, California 90245, Tel: (310) 322 3331
IR GREAT BRITAIN: Hurst Green, Oxted, Surrey RH8 9BB, UK Tel: ++ 44 1883 732020
IR CANADA: 15 Lincoln Court, Brampton, Ontario L6T3Z2, Tel: (905) 453 2200
IR GERMANY: Saalburgstrasse 157, 61350 Bad Homburg Tel: ++ 49 6172 96590
IR ITALY: Via Liguria 49, 10071 Borgaro, Torino Tel: ++ 39 11 451 0111
IR FAR EAST: K&H Bldg., 2F, 30-4 Nishi-Ikebukuro 3-Chome, Toshima-Ku, Tokyo Japan 171 Tel: 81 3 3983 0086
IR SOUTHEAST ASIA: 1 Kim Seng Promenade, Great World City West Tower, 13-11, Singapore 237994 Tel: ++ 65 838 4630
IR TAIWAN:16 Fl. Suite D. 207, Sec. 2, Tun Haw South Road, Taipei, 10673, Taiwan Tel: 886-2-2377-9936
http://www.irf.com/ Data and specifications subject to change without notice. 10/98